# INSTALLATION & MAINTENANCE

## Steel Residential Garage Door Instructions

Model: _____ Serial No. _____

(Provided on label on interior door surface)

Size: _____ Please complete & mail warranty registration card on page 8.

**Homeowners Should Retain This Booklet For Future Reference**

Installed By:

Clopay® BUILDING PRODUCTS
A Griffon Company

**CONSUMER HOTLINE • 1-800-2CLOPAY • 1-800-225-6729**

Hours of Operation (EST): Mon. – Fri., 8:30 AM - 8 PM; Sat. 8:30 AM - 5 PM.

**Packer#**

*Dear Clopay Customer,*

*Thank you for purchasing a Clopay Garage Door. Your new Clopay Garage Door was built to meet the highest industry standard and to provide you with years of dependable performance.*

*This manual contains important installation and maintenance information. Carefully follow the instructions and maintenance recommendations. Please keep this manual for future reference.*

*If you should require any assistance or additional information, please call our Clopay Consumer Services Hotline at 1-800-2CLOPAY (1-800-225-6729). One of our representatives will be happy to assist you.*

*Remember to take a moment to complete all questions on your Warranty Registration Card (found on page 8) and return it to Clopay.*

*Thank you again for choosing Clopay!*

*Sincerely,*
*Clopay Building Products Company*

Clopay®
America's Favorite Garage Doors™

# Table of Contents


***Introduction and Opening Preparation***

Safety Information ..... P-3
Things to Know Before You Begin ..... P-5
Torsion Spring Door Illustration ..... P-6
Extension Spring Door Illustration ..... P-7
Hardware Components ..... P-8
Removing the Existing Door ..... P-10
Check Headroom/Backroom/Sideroom ..... P-12
Preparing the Opening ..... P-13

***Installing the New Door***

Preparing and Installing Door Sections ..... P-14
Lock Installation ..... P-17
Assembling and Installing the Track ..... P-20
Assembling and Installing Extension Springs ..... P-25
Torsion Spring Assembly ..... P-28

***Maintenance/Adjustments/Options***

Checking and Adjusting the Door ..... P-31
Maintenance ..... P-32
Replacement Parts ..... P-32
Attaching an Automatic Opener ..... P-33
Painting and Windows ..... P-35
Low Headroom Options ..... P-36

# SAFETY INFORMATION

## IMPORTANT!

**To Protect Yourself From Injury You Must Carefully Read The Following Safety Information And Warnings Before You Install Or Use Your New Garage Door**

- You can install your new garage door yourself IF…
  1. you have help (it may weight up to 400 lbs.);
  2. you have the right tools and reasonable mechanical aptitude or experience; and
  3. you follow these instructions very carefully.

  In particular, please note that:

- Garage doors use springs to balance them. Generally, there are two types of springs used — extension springs and torsion springs. Please look at the drawings on pages 6 & 7 to see which springs your old door has. **If your old door uses torsion springs, do not attempt to remove the door or the springs yourself.** Have a qualified door repair service remove them. Attempting to remove a torsion spring assembly without proper training or tools may result in an uncontrolled release of spring forces which can cause serious or fatal injury.

- The brackets at the bottom corners of your garage door are under great tension. **Do not attempt to loosen any bracket fasteners** except when and as directed in detail in the following instructions. Otherwise, the bracket could spring out with dangerous force.

- In removing a garage door which has extension springs, follow the instructions carefully, including the use of "C" clamps or locking pliers on both sides of the door in order to keep the door from moving once the springs are removed.

- When installing a door with torsion springs, always use solid steel ½" x 18" winding bars. Winding bars are available from many professional door installers. **The use of screwdrivers or any substitutes for winding bars will risk severe injury.** See page 29 for further safety instructions regarding winding bars.

- Keep hands and fingers clear of section joints, track, and other door parts when the door is opening and closing to avoid injury. The lift handles are located for safe operation as well as easy use.

- **Extension spring doors must never be operated without a properly installed spring containment cable.**

- Bolts must be installed at the rear end of horizontal tracks. These act to stop the rollers and keep the door from rolling off the back of the track.

- **Only the track specified and supplied with the door should be used.**

- Express warranties apply only to doors installed using original, factory-supplied sections, parts, and hardware installed in strict accordance with these instructions.

# SAFETY INFORMATION

## IMPORTANT!

**To Protect Yourself From Injury You Must Carefully Read The Following Safety Information And Warnings Before You Install Or Use Your New Garage Door**

- Track installations must use sway braces on the rear track hangers to prevent sideways movement. If the tracks are not firmly stabilized they might spread, allowing the door to fall and cause severe injury and damage.

- If your new door has a torsion spring (except EZ-Set Torsion™), the center torsion spring assembly uses a wooden pad that **must be of good quality and firmly attached to the wall.** Four ⅜" x 3" lag screws should be used to attach wood structure. The wood needs to be made of a Grade 2 or better Southern Yellow Pine (also known as Southern Pine or Yellow Pine.) **Do NOT** use wood labeled as Spruce-Pine-Fir (or SPF.). Four ⅜" masonry anchors can be used on concrete or block walls. If the wood splits once the torsion spring is in place, it should be replaced by a professional installer. **Do not try to remove or repair a torsion spring assembly or red fasteners once the spring is wound.**

- Springs, cables, and bottom fixtures are under strong spring tension. **Do not attempt to loosen any fasteners on these components.** You could suddenly release spring forces and risk severe injury.

- If the garage door and/or any of the supporting track are damaged, operating the door could be hazardous. Call an authorized representative of the manufacturer or professional door repair service promptly.

- **Do not permit children to play beneath or with any garage door or electric operating controls.**

- If repairs are ever required to your door, safety and trouble-free operation can be best assured by using original replacement parts.

- Once you have completed the installation of your new garage door, please be sure that your garage complies with all applicable ventilation requirements before you enclose any vehicles in the garage. Good ventilation avoids fire and health hazards caused by fumes accumulating within a well-sealed garage.

- Clopay Building Products Company disclaims all liability for any installation which is not in compliance with applicable state or county building codes.

- Doors equipped with automatic door operators can cause serious injury or death if not properly adjusted and operated. To insure safe of these doors:
  a) test the sensitivity of the operator's safety reverse mechanism monthly;
  b) if your door has a pull down rope, you must remove the pull down rope.
  c) make sure the door remains unlocked;
  d) do not allow children to play with the controls.

# Things to Know Before You Begin

Read the instructions completely before starting the installation of the door. Becoming familiar with the components before assembling the door will reduce the installation time.

**In the interest of safety this symbol means WARNING or CAUTION. Personal injury and/or property damage may occur unless instructions are followed carefully.**

- Allow enough time to do the work; removing an existing door will take approximately 1-3 hours.
- An assistant may be required for lifting the unsprung door. It can weigh from 175 to 400 pounds.
- A typical installation takes between 9 and 12 hours to complete.
- Keep in mind when planning the installation that the garage will be open and unsecured when disassembling the old and assembling the new door.
- If the garage door is the only opening in the structure make sure everything you need is inside. You will have no way of leaving the garage until the track is assembled and installed. This will take approximately 5 hours.
- To avoid damage to the door, you must reinforce the top section of the door in order to provide a strengthened mounting point for attachment of an automatic opener (see page 33).
- Low Headroom doors require special instructions found on page 36. Purchase of additional hardware may be required. Check headroom requirements in the chart on page 12 before beginning.
- You must use the track and hardware provided with the new door for proper and safe operation.
- To avoid installation problems which could result in personal injury or property damage, never reuse old track.
- Doors installed in high windload regions (Florida and other hurricane prone areas) may require additional reinforcement beyond what is detailed in these instructions. Please refer to supplemental instructions for these areas.

# Tools Needed

- “C” Clamps or Locking Pliers
- Hammer
- Winding Bars (Torsion Only)
- Screwdriver
- Tape Measure
- Level
- Socket wrench kit
- Pliers
- Drill, and $^1/_4$", $^3/_{16}$", & $^3/_8$" bits;
- Step ladder
- Saw horses or other supports for placing section on while assembling

# Additional Material Required

- Light household oil
- Punched Angle — For rear track hangers $1^1/_4$" x $1^1/_4$" minimum angle at least 13 ga. or $^3/_{32}$" thick (this is not provided due to ceiling height differences)
- Six $^5/_{16}$" x $1^1/_2$" lag screws for rear track hangers
- Eight $^3/_8$" x 1" bolts and nuts for rear track hangers
- Ten 10d 3" nails
- Four $^3/_8$" x 4" lag screws — used to mount center pad on torsion installation
- Stop molding
- For automatic opener
  - Punched angle $1^1/_4$" x $1^1/_4$" minimum (angle at least 13 ga. or $^3/_{32}$" thick) - See page 33 for more information.
  - See page 33 for the bolts or screws needed.

# Garage Door with Torsion Springs

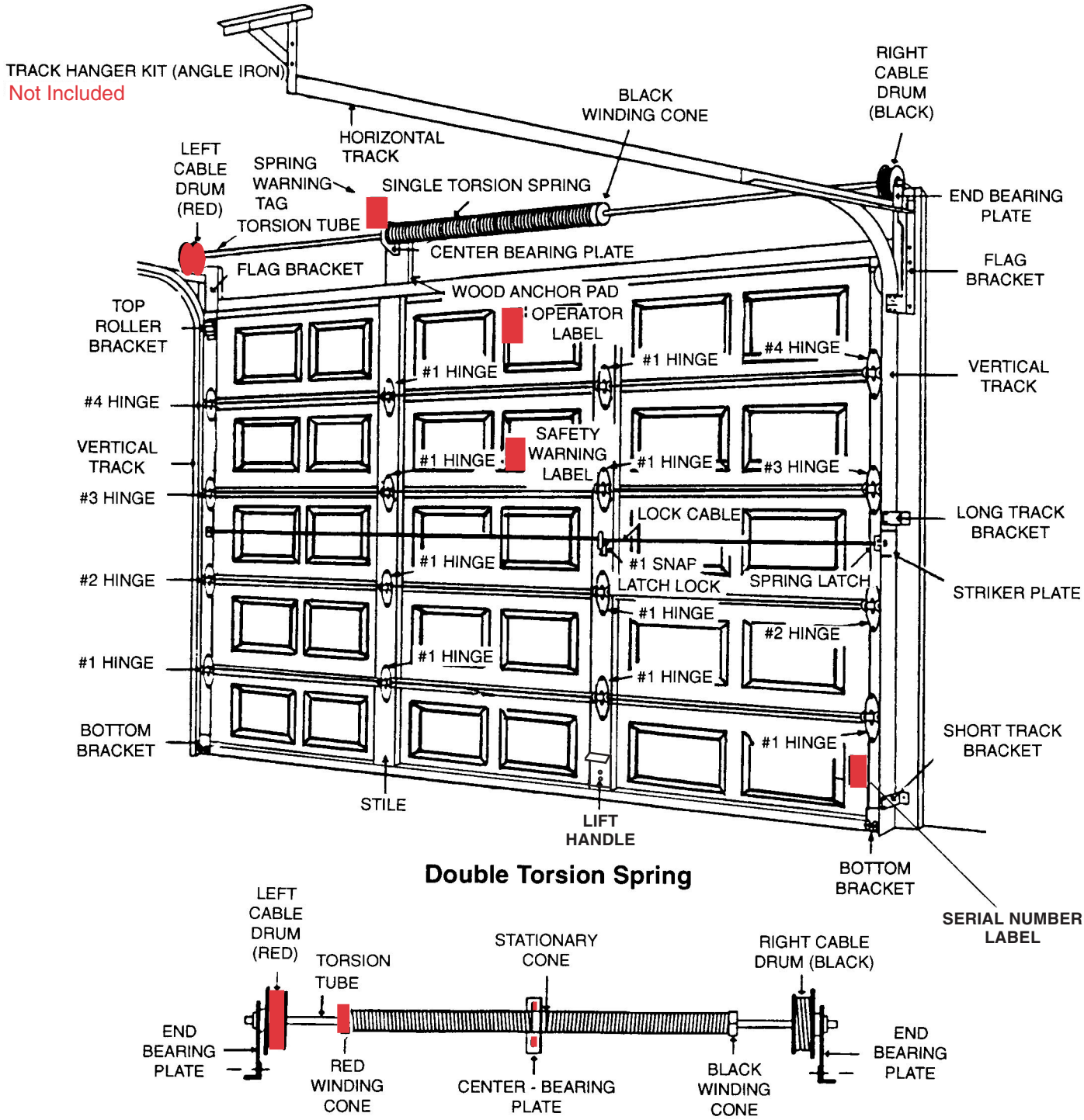


**NOTE:** The opposing page illustration and the above illustration represent a composite of many of the features found on a variety of garage doors. While not representative of any one door, it provides a handy reference for the location of specific components and hardware.

# Garage Door with Extension Springs

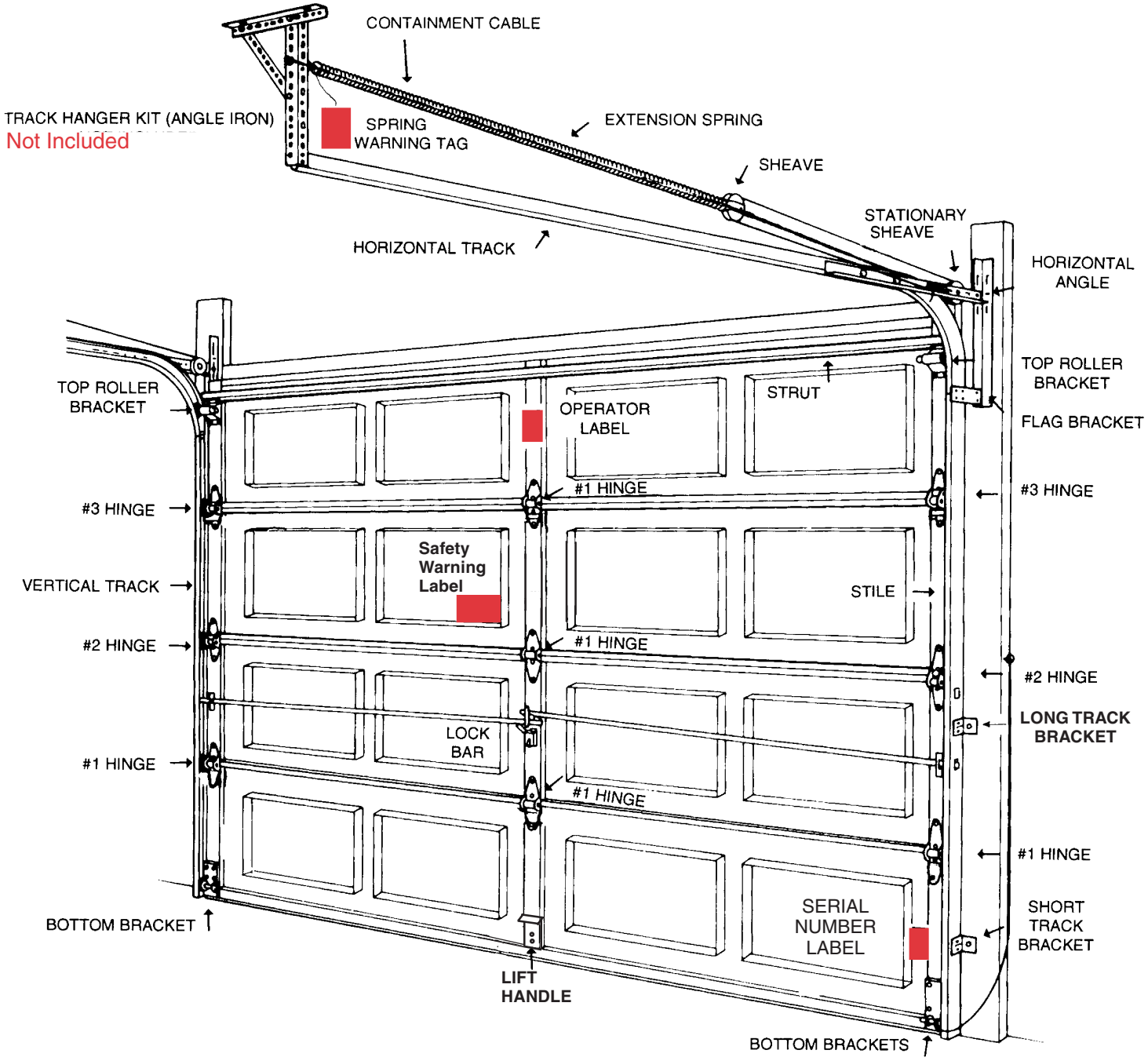


**NOTE:** The opposing page illustration and the above illustration represent a composite of many of the features found on a variety of garage doors. While not representative of any one door, it provides a handy reference for the location of specific components and hardware.

# Hardware Components

All doors will receive (2) of these items:

| | | |
|---|---|---|
| TRACK BRACKET (Longer) | 3/8" – 16 X 3/4" CARRIAGE BOLT | 3/8" WASHER |
| TRACK BRACKET (Shorter) | TOP ROLLER BRACKET | CURVED HORIZONTAL TRACK |
| #2 HINGE | BOTTOM BRACKET (1) PAIR | VERTICAL TRACK |
| #3 HINGE | HORIZONTAL ANGLE | Cable assembly |
| | FLAG BRACKET (1) PAIR | |

(While not representative of any one model, the quantities below can be used as a guide. In some instances, extra screws/bolts are provided in the event of strip out or loss of parts.)

| DESCRIPTION | DOOR SIZE | QTY. |
|---|---|---|
| 3/8" flange nut | Single Car Doors 8' - 9' W X 7' H | 2 |
| | Double Car Doors 16' W X 7' H | 2 |
| 1/4" flange nut | Single Car Doors 8' - 9' W X 7' H | 18 |
| | Double Car Doors 16' W X 7' H | 24 |
| #6 eyescrew | Single Car Doors 8' - 9' W X 7' H | 1 |
| | Double Car Doors 16' W X 7' H | 1 |
| 14 X 5/8" HEX HEAD SHEET METAL SCREW | Single Car Doors 8' - 9' W X 7' H | 56 |
| | Double Car Doors 16' W X 7' H | 92 |
| STRUTS1 | Single Car Doors 8' - 9' W X 7' H | 0 |
| | Double Car Doors 16' W X 7' H | 1 or 3 |
| STRUT CLIPS2 | Single Car Doors 8' - 9' W X 7' H | 0 |
| | Double Car Doors 16' W X 7' H | *10/ strut* |
| 1/4" – 20 X 23/4" CARRIAGE BOLT | Single Car Doors 8' - 9' W X 7' H | 2 |
| | Double Car Doors 16' W X 7' H | 2 |

| DESCRIPTION | DOOR SIZE | QTY. |
|---|---|---|
| ROLLERS | Single Car Doors 8' - 9' W X 7' H | 10 |
| | Double Car Doors 16' W X 7' H | 10 |
| #1 HINGE | Single Car Doors 8' - 9' W X 7' H | 5 |
| | Double Car Doors 16' W X 7' H | 11 |
| LIFT HANDLES | Single Car Doors 8' - 9' W X 7' H | 2 |
| | Double Car Doors 16' W X 7' H | 1 or 2 |
| 1/4" X 5/8" TRACK BOLT | Single Car Doors 8' - 9' W X 7' H | 16 |
| | Double Car Doors 16' W X 7' H | 22 |
| 5/16" X 15/8" LAG SCREW | Single Car Doors 8' - 9' W X 7' H | 10 |
| | Double Car Doors 16' W X 7' H | 10 |
| 3/8" SPACER | Single Car Doors 8' - 9' W X 7' H | 2 |
| | Double Car Doors 16' W X 7' H | 2 |

[1]More struts may be required in high windload areas
[2]Self-tapping screws replace strut clips on high windload doors

# Additional Hardware Components

## For Torsion Spring Doors Only

| DESCRIPTION | DOOR SIZE | QTY. |
|---|---|---|
| TORSION SPRING | Single Car Doors 8' - 9' W X 7' H | 1 |
| | Double Car Doors 16' W X 7' H | 1 or 2 |
| END BEARING PLATE | Single Car Doors 8' - 9' W X 7' H | 2 |
| | Double Car Doors 16' W X 7' H | 2 |
| TORSION TUBE | Single Car Doors 8' - 9' W X 7' H | 1 |
| | Double Car Doors 16' W X 7' H | 1 |
| CENTER BEARING PLATE | Single Car Doors 8' - 9' W X 7' H | 1 |
| | Double Car Doors 16' W X 7' H | 1 |
| CABLE DRUMS | Single Car Doors 8' - 9' W X 7' H | 2 |
| | Double Car Doors 16' W X 7' H | 2 |
| NYLON CENTER BEARING | Single Car Doors 8' - 9' W X 7' H | 1 |
| | Double Car Doors 16' W X 7' H | 1 |
| 5/16" X 15/8" LAG SCREW | Single Car Doors 8' - 9' W X 7' H | 2 |
| | Double Car Doors 16' W X 7' H | 2 |
| 5/16" X 15/8" LAG SCREW (RED HEAD) | Single Car Doors 8' - 9' W X 7' H | 2 |
| | Double Car Doors 16' W X 7' H | 2 |
| 3/8" X 3/4" HEX HEAD BOLT | Single Car Doors 8' - 9' W X 7' H | 4 |
| | Double Car Doors 16' W X 7' H | 4 |
| 3/8" FLANGE NUT | Single Car Doors 8' - 9' W X 7' H | 6 |
| | Double Car Doors 16' W X 7' H | 6 |
| 3/8"-16 X 3/4" CARRIAGE BOLT | Single Car Doors 8' - 9' W X 7' H | 2 |
| | Double Car Doors 16' W X 7' H | 2 |

## For Extension Spring Doors Only

| DESCRIPTION | DOOR SIZE | QTY. |
|---|---|---|
| EXTENSION SPRING | Single Car Doors 8' - 9' W X 7' H | 2 |
| | Double Car Doors 16' W X 7' H | 2 or 4 |
| SHEAVE | Single Car Doors 8' - 9' W X 7' H | 4 |
| | Double Car Doors 16' W X 7' H | 4 |
| SHEAVE FORK | Single Car Doors 8' - 9' W X 7' H | 2 |
| | Double Car Doors 16' W X 7' H | 2 or 6 |
| 3/8" X 11/4" SHEAVE BOLT | Single Car Doors 8' - 9' W X 7' H | 4 |
| | Double Car Doors 16' W X 7' H | 4 |
| 5/16" EYEBOLT | Single Car Doors 8' - 9' W X 7' H | 2 |
| | Double Car Doors 16' W X 7' H | 2 or 4 |
| SAFETY SPRING CONTAINMENT KIT | Single Car Doors 8' - 9' W X 7' H | 2 |
| | Double Car Doors 16' W X 7' H | 2 or 4 |
| (3) HOLE ADJUSTMENT KIT | Single Car Doors 8' - 9' W X 7' H | 2 |
| | Double Car Doors 16' W X 7' H | 2 |
| YOKE PLATE | Single Car Doors 8' - 9' W X 7' H | 0 |
| | Double Car Doors 16' W X 7' H | 0 or 2 |
| 5/16" YOKE BOLT | Single Car Doors 8' - 9' W X 7' H | 0 |
| | Double Car Doors 16' W X 7' H | 0 or 4 |
| S-HOOK | Single Car Doors 8' - 9' W X 7' H | 2 |
| | Double Car Doors 16' W X 7' H | 2 |
| BLACK BUSHING | Single Car Doors 8' - 9' W X 7' H | 2 |
| | Double Car Doors 16' W X 7' H | 2 or 4 |
| 5/16" FLANGE NUT | Single Car Doors 8' - 9' W X 7' H | 4 |
| | Double Car Doors 16' W X 7' H | 4 or 8 |
| 3/8" FLANGE NUT | Single Car Doors 8' - 9' W X 7' H | 4 |
| | Double Car Doors 16' W X 7' H | 4 |

# Removing the Existing Door

**WARNING**

Garage doors use springs to balance the door weight. Generally there are two types of springs used — extension springs and torsion springs. Please look at the drawings on pages 6 & 7 to see which springs your old door has installed. **If your present door uses torsion springs, do not attempt to remove the door or the springs yourself.** They should be removed by a qualified door service professional. Attempting to remove a torsion spring assembly without proper training and tools may result in an uncontrolled release of spring forces which can cause serious or fatal injury.

Extension springs are shown installed on a sectional garage door in the illustration on Page 7. Instructions for removing this type of spring are provided below.

## Removing Extension Springs

**WARNING**

**Serious injury could result if spring tension has not been released before other work begins. Do not attempt to remove or adjust extension springs with door in the down position. Use "C" clamps to keep the door from moving or falling once the springs are removed.**

**Step 1a:** Raise the door to the full open position. Place "C" clamps or locking pliers tightly on both sides of the track under the door so the door is held securely in place. With the door fully open, most spring tension has been removed. (FIG. 1)

**Step 1b:** Detach the cable at both ends. Disassemble and remove the springs and cable completely from the door. (FIG. 2)

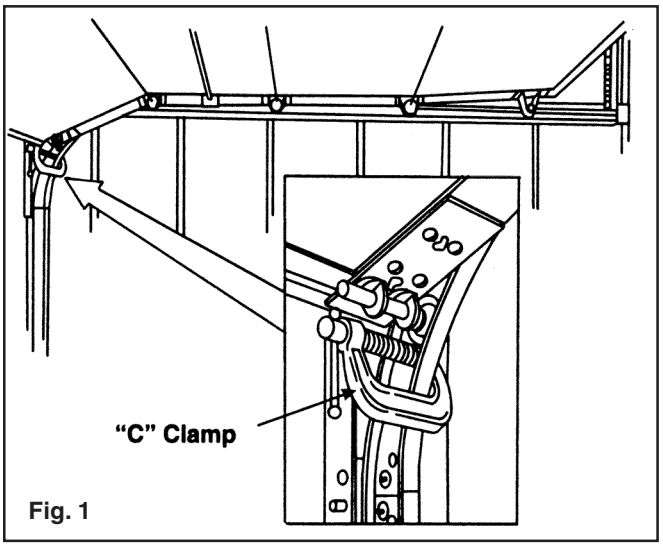

Fig. 1

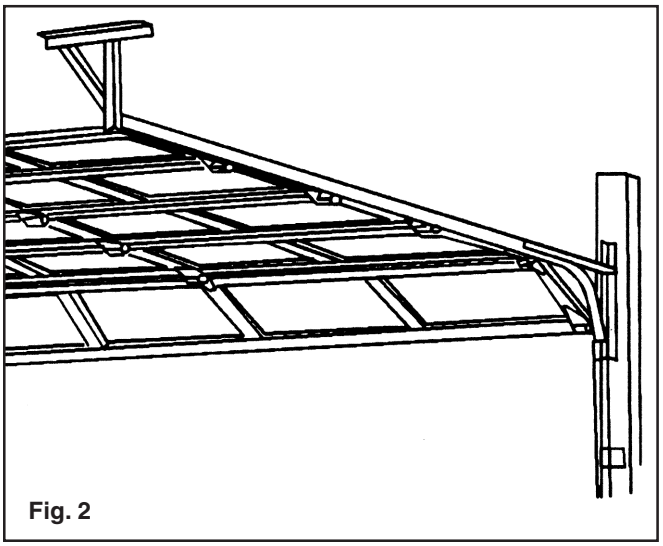
Fig. 2

**Step 1c:** Remove the “C” clamps from the track and carefully close the door.

**WARNING**

**Use two or more helpers to assist you in lowering the door.**

Some large doors might weigh as much as **400 pounds** when the spring tension is removed. The weight of the door will not be apparent when you first begin to close the door. The door will feel progressively heavier as it is lowered until its full weight (as much as 400 pounds) is realized about one foot from the floor. A single car door may weigh as much as **200 pounds**. (FIG. 3)

**NOTE:** Wood blocks should be placed underneath the door when closing to prevent fingers from being trapped.

**WARNING**

**To avoid injury, keep hands and fingers clear of section joints, track, and other door parts while the door is opening and closing.**

**Step 2:** The door can now be disassembled. Starting with the top section, remove the hardware and unstack the sections one at a time. (FIG. 4)

**Step 3:** After all sections have been removed from the opening, detach all remaining track and hardware from the jambs. The hangers that attach the rear ends of the overhead track to the ceiling (called rear track hangers) in many cases can be reused on the new door if made of 13 gauge ($^{3}/_{32}$") or heavier steel and is not loose or unstable. (FIG. 5)

**WARNING**

**To avoid installation problems which could result in personal injury or property damage, use only the track specified and supplied with the door. Do not attempt to reuse old track.**

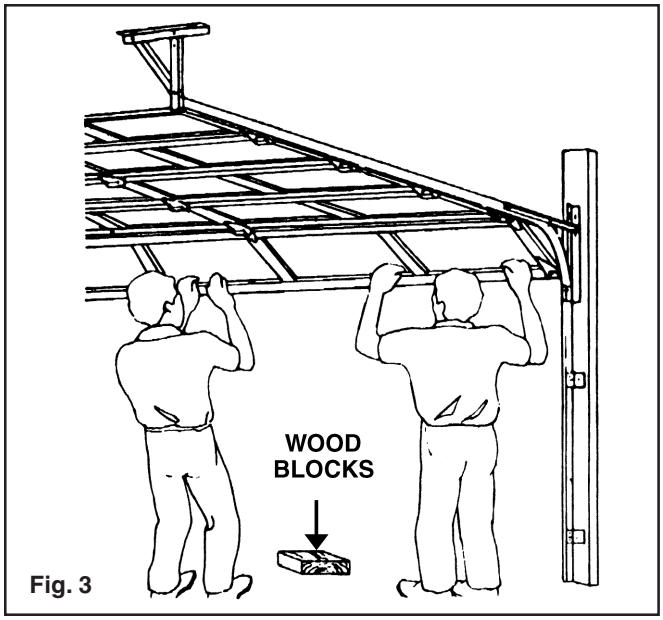

Fig. 3

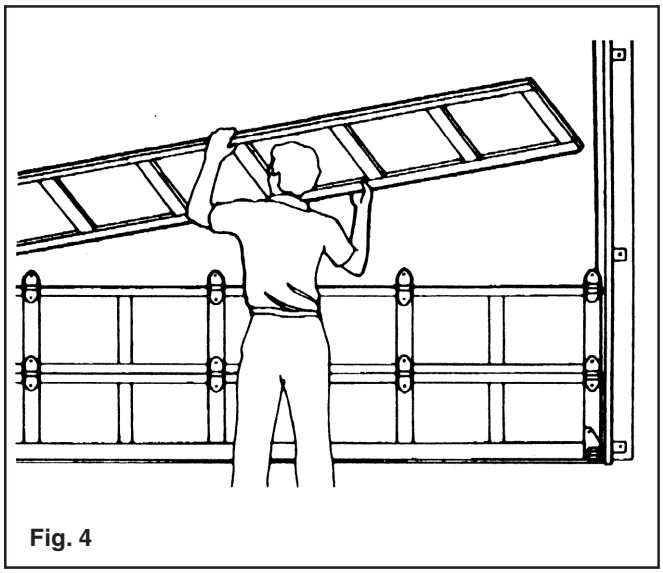
Fig. 4

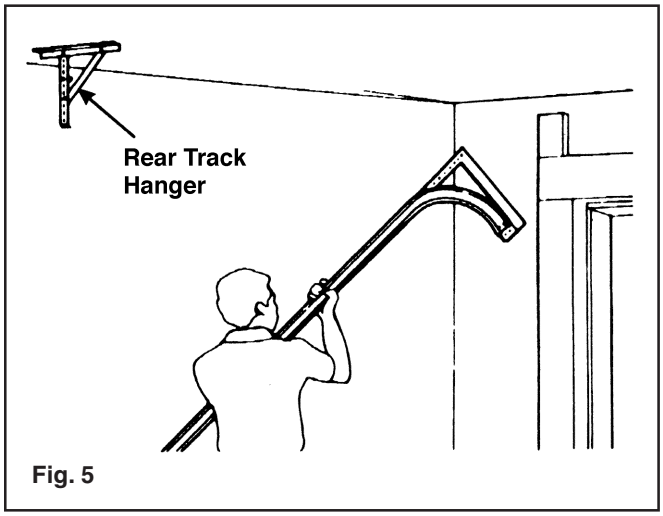

Fig. 5

# Check Headroom/ Backroom/Sideroom

Headroom is the space needed above the top of the door for the door, the overhead tracks, and the springs. Measure to check that there are no obstructions in your garage within that space. The normal headroom space requirement is shown in the chart below. The backroom distance is measured from the back of the door into the garage, and should be at least 18" more than the height of the garage door. A minimum sideroom of 3¾" should be available on each side of the door on the interior wall surface to allow for attachment of the vertical track assembly. (FIG. 6)

Track Radius: The radius of your track can be determined by measuring the dimension “R” in Figure 7. If dimension “R” measures 11" to 12", then you have a 12" radius track. If “R” equals 14" to 15", then you have a 15" radius track. (FIG. 7)

**Headroom requirements:** The normal headroom space requirement is shown in the chart. (See page 6 or 7 if you have a question on which type of spring you have.)

**NOTE:** About 3" of additional headroom height at the center plus additional backroom is needed to install an automatic garage door opener. Check door opener instructions.

**Headroom Requirement Chart**

| SPRING TYPE | TRACK RADIUS | HEADROOM REQUIRED |
|---|---|---|
| EZ Set Extension Spring™ or Extension Spring | 12" | 10" |
| EZ Set Extension Spring™ or Extension Spring | 15" | 12" |
| EZ Set Torsion Spring™ or Torsion Spring | 12" | 12" |
| EZ Set Torsion Spring™ or Torsion Spring | 15" | 14" |

Low Headroom? If you have restricted headroom, several remedies are available. See page 36 for various options.

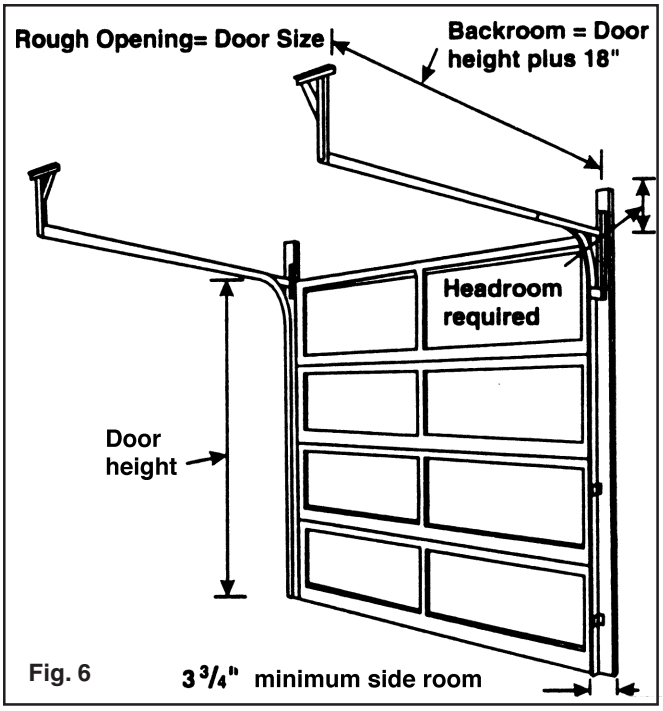

Fig. 6

**Track Radius Measurement**

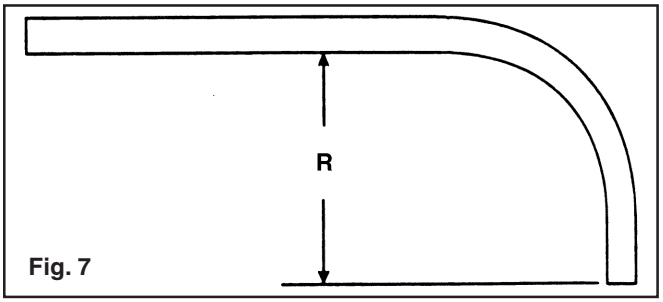

Fig. 7

# Preparing the Opening

**Step 1:** On the inside of the garage your opening should be framed with wood jambs, 2" x 6" if possible, as shown in Figure 8. The side jambs should extend to approximately the same height as the headroom required. If you have just removed an old door, the jambs should be inspected for the condition of the wood. If the wood is rotten, it should be replaced now. The jambs should be plumb and the header level. If there are any bolts fastening the jambs to the wall, the heads should be flush so they don't interfere with the installation of your new door. (FIG. 8)

**NOTE: Rough opening = Door size**

**For Torsion Springs Only**

**WARNING**

If your door has a torsion assembly, **you must make sure that the wood anchor pad (see Fig. 8) is firmly attached to the garage wall.** Failure to securely attach the anchor pad could allow the springs to violently pull away from the garage wall, and could result in severe injury and/or property damage. **Under no circumstances should the anchor pad be attached with nails.**

Refer to Figure 8 for the configuration of 2" x 6" wood jambs. Wood anchor pad should run from header jamb to ceiling to a maximum length of 18".

**IMPORTANT:** The wood anchor pad must be made of a Grade 2 or better Southern Yellow Pine (also known as Southern Pine or Yellow Pine). The Southern Yellow Pine must be free of splits and cracks. **Do not use wood labelled as spruce-pine-fir (or SPF).**

The wood anchor pad must be installed into the frame of the garage with at least four 3/8" x 4" long lag screws (one at each corner). The four lag screws must be installed no closer than 1 1/2" from the sides and the ends of the 2 x 6. These lag screws must fasten into the wood frame of the garage, not the drywall or sheet rock. Wood anchor pad and 3/8" x 4" lag screws are not supplied.

**NOTE:** The wood anchor pad can be off-center to the width of the opening by up to 10" in either direction.

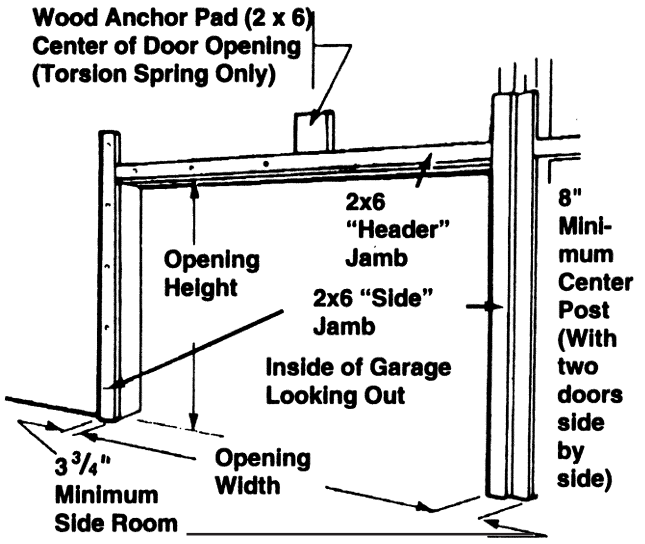

Fig. 8

**Step 2:** Door stop molding should be temporarily nailed to the edges of the jambs flush with the inside. (FIG. 9)

Stop molding featuring a built in weather seal is offered as an option.

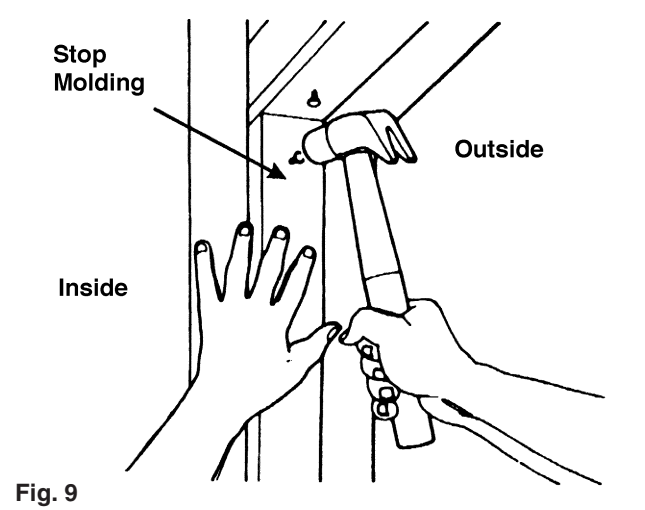

Fig. 9

# Installing the New Door

## Preparing and Installing Door Sections

**Step 1:** Spread the hardware on the garage floor in groups so that you can easily find the parts.

**Step 2:** Find the section with the aluminum weatherstrip retainer fastened to one edge. The aluminum weatherstrip retainer is on the bottom edge of the bottom section. Place the section on saw horses face down. (FIG. 10)

**NOTE:** The weatherseal should be trimmed flush with the edge of the door.

**NOTE:** Cover saw horses with carpet or cloth so as not to scratch section.

**Step 2a:** Bend and break apart bottom brackets by hand along end tabs as shown.

**NOTE:** Remove connecting tab. (FIG. 11)

**Step 3:** Insert safety tabs on bottom bracket into slots on end stile of door. Slide bottom bracket up to fully engage tabs (FIG. 12). Attach all hardware with #14 x 5/8" sheet metal screws. Attach the bottom brackets with two screws to the bottom corners of the section. Screws go into the end stiles. Hook the looped ends of the steel lift cable over the buttons on the bottom brackets. (If your door came with standard extension or EZ-Set Extension Springs™, the lift cables are the longer and smaller diameter of the two sets of cable. If your door came with EZ-Set Extension Springs™, do NOT attach lift cables at this time! Do NOT use the shorter safety containment cables as lift cables, as this can cause improper door function). (FIG. 13)

**WARNING**

**Failure to properly engage safety tabs on bottom bracket into slots on edge of door can result in severe injury when spring tension is applied.**

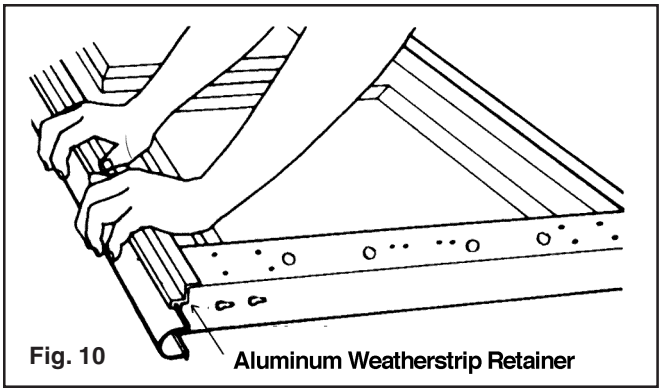

Fig. 10

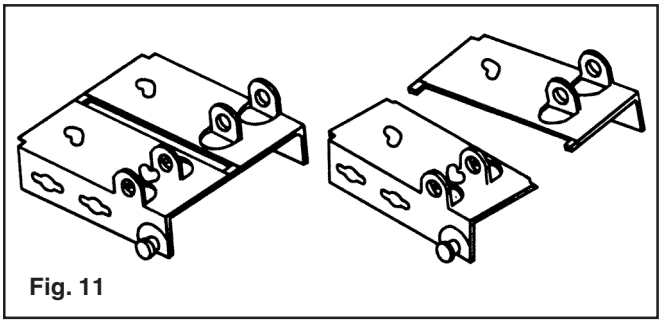
Fig. 11

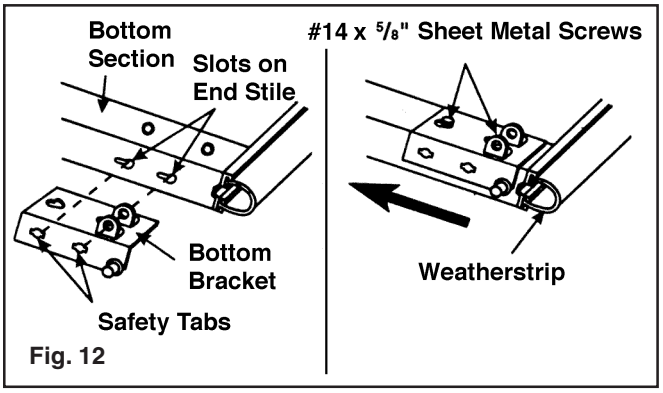

Fig. 12

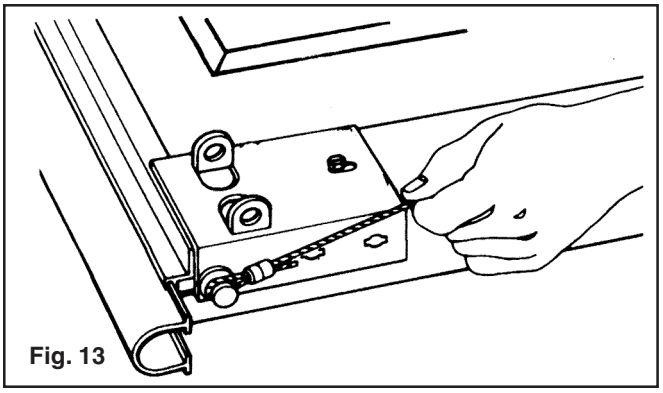
Fig. 13

**Step 4:** Hinges are identified by number 1, 2, 3 (and sometimes 4, on 5 section doors only). This number is stamped on the hinge. Attach a number 1 hinge to each pair of pre-punched holes along the top edge of the section. The number is stamped on the side of the hinge that is to be attached to the section. (FIG. 14)

**Note:** If the chart on page 15 shows a need for a reinforcing strut it should be attached on top of hinges. Use #14 x 5/8" sheet metal screws and strut clips as shown in the illustration. DO NOT use the pre-drilled holes in the strut. Attach strut with the strut clips provided. (See FIG. 14 inset)

**Section Requiring Struts**

| Door Width | Bottom Section | 3rd Section | Top Section |
|---|---|---|---|
| 15 & 16 ft. | — | — | ✔ |
| 17 & 18 ft. | ✔ | ✔ | ✔ |
| over 18 ft. 2 in. — one strut per section. | | | |

**NOTE:** Doors installed in high windload regions (Florida and other hurricane prone areas) may require additional reinforcement beyond what is detailed in these instructions. Please refer to supplemental instructions for these areas.

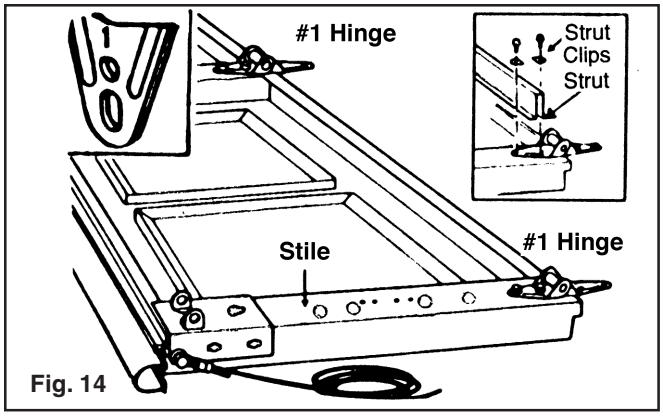

Fig. 14

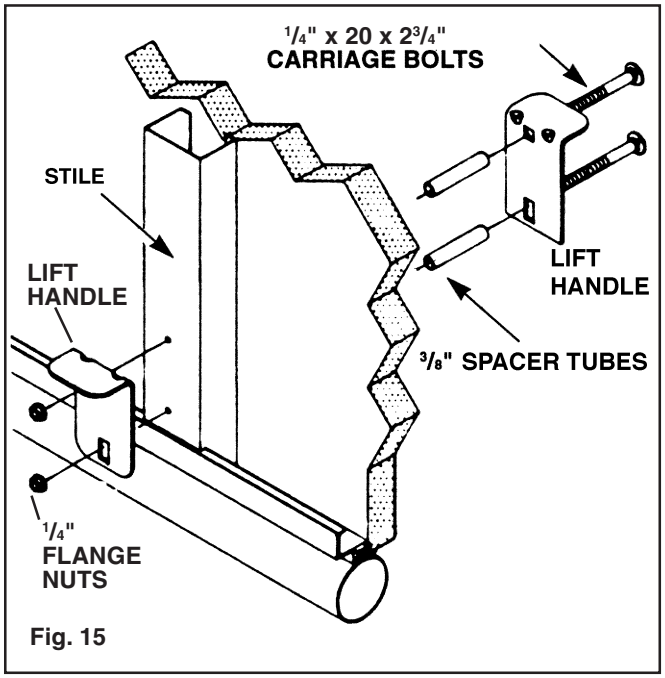

Fig. 15

# Lift Handle Instructions

Drill two 1/4" holes straight through the door using the pre-punched holes located at the bottom center of the door as a template. From the outside, enlarge the two 1/4" holes on the outside skin using a 3/8" drill, being careful not to drill through inside stile (vertical support). On insulated doors, remove any excess foam from the 3/8" holes. Insert the 3/8" spacer tubes from the outside of the door. Position each plate on either side of the drilled holes and fasten together with two 1/4" x 20 x 2 3/4" flat head carriage bolts (head should be on outside of door), and two 1/4" flange nuts. (FIG. 15)

**NOTE:** If the door has a #2 slide bolt lock (pg. 24) the lift handle should be located on the end stile underneath the lock location above the bottom bracket.

**Step 5:** Place the section in the opening so that it is against the stop molding and centered from side to side. Place a level on the section and use a piece of wood under one end or the other (if necessary) to make the section level. (FIG. 16)

**Step 6:** Remove the level and drive a 3" nail in the jambs at each end and bend it over the edge of the section to hold the section in place. (FIG. 17)

**NOTE:** These nails are all that will hold the stacked door section in place until the tracks are secured to the back jambs. Be sure the nails hold the sections firmly in position.

With the chart (FIG. 18), determine the order in which you will attach the remaining sections.

**NOTE:** If a lock assembly was ordered with the door, the holes for the lock are pre-drilled. (Lock templates are available for doors without pre-drilled holes.)

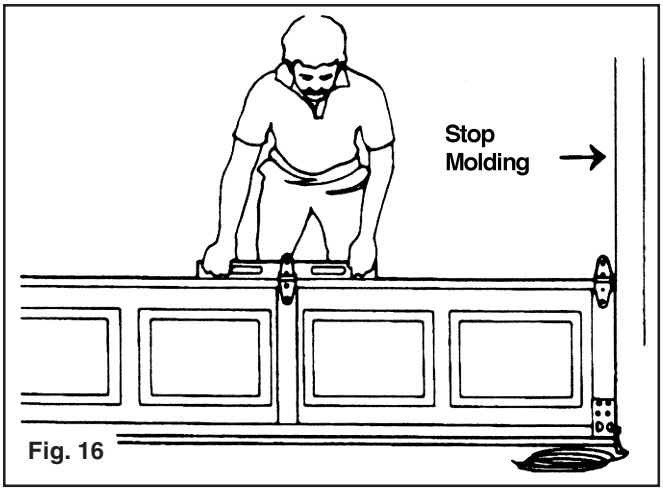

Fig. 16

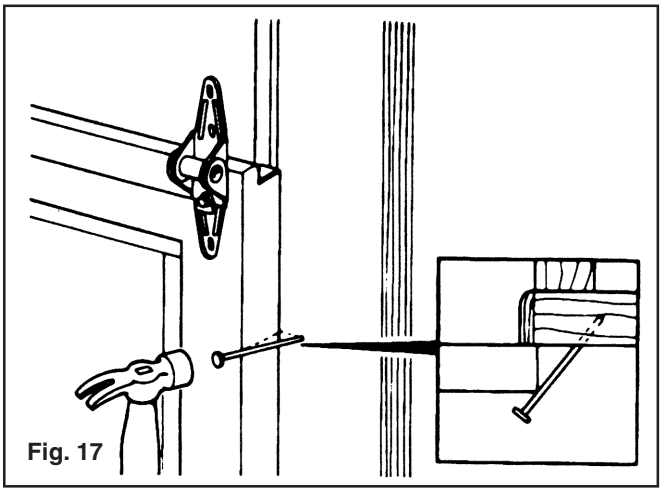
Fig. 17

| Door Height | 1st Bottom Section | 2nd Section (lock section) | 3rd* | 4th | 5th | MODELS 70 & 70I ONLY Door Height | 1st Bottom Section | 2nd Section (lock section) | 3rd* | 4th |
|---|---|---|---|---|---|---|---|---|---|---|
| 6'0" | 18" | 18" | 18" | 18" | — | 6'0" | 18" | 18" | 18" | 18" |
| 6'3" | 18" | 18" | 18" | 21" | — | 6'3" | 21" | 18" | 18" | 18" |
| 6'6" | 21" | 18" | 18" | 21" | — | 6'6" | 21" | 21" | 18" | 18" |
| 6'9" | 21" | 21" | 18" | 21" | — | 6'9" | 21" | 21" | 21" | 18" |
| 7'0" | 21" | 21" | 21" | 21" | — | 7'0" | 21" | 21" | 21" | 21" |
| 7'6" | 18" | 18" | 18" | 18" | 18" | 7'3" | 24" | 21" | 21" | 21" |
| 7'9" | 18" | 18" | 18" | 18" | 21" | 7'6" | 24" | 24" | 18" | 21" |
| 8'0" | 21" | 18" | 18" | 18" | 21" | 7'9" | 24" | 24" | 24" | 21" |
| | | | | | | 8'0" | 24" | 24" | 24" | 24" |

Fig. 18 *Section with general safety label.

**Step 7:** Place the next section face down on the saw horses. If your door is to have a lock, this section will be the one with holes in the center of the panel face. Identify the bottom edge as shown in the illustration. (FIG. 19)

Attach a number 2 hinge to each end at the top edge. Remember that the number is stamped on the side of the hinge that is to be attached to the section. Attach a number 1 hinge to all other pre-punched holes along the top edge of the section.

Determine which locking system your door uses. If the door has no lock proceed to Step 8 on page 19.

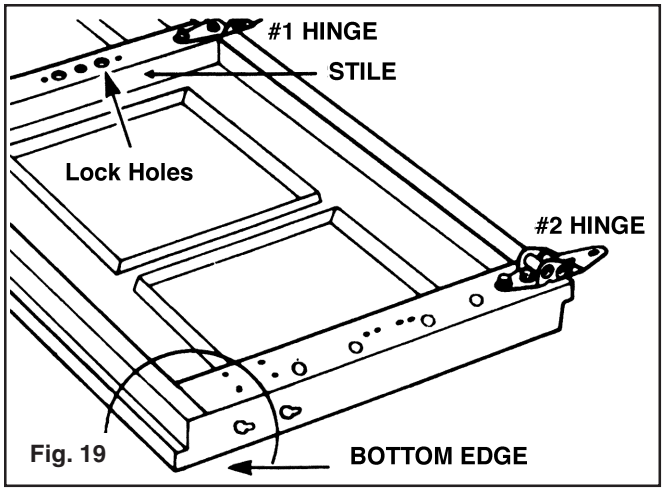

Fig. 19

# Lock Installation

**NOTE: If your door is going to be equipped with an automatic garage door opener, make sure that the door is always unlocked when the operator is being used. This will avoid damaging the door.**

## #1 Snap Latch
## AUTO-LATCH LOCK ASSEMBLY INSTRUCTIONS

1. Slide the outside handle (1) through the holes in the lock section. Remove the paper from the Foam Gasket (2) and place the gasket between the outside handle and the door skin (be sure the adhesive faces the door). (FIG. 20)

2. Slide the two lock spacers (3) through the top and bottom holes of the lock stile and over the spindles of the outside handle.

3. Attach the backing plate (4) to the outside handle (1) using two #10 x 24 machine screws (5).

4. Slide the inside release handle (6) over the shaft of the outside handle and secure in place using the Tinnerman nut (7). Be sure the Tinnerman nut is pressed firmly against the inside release handle.

5. Slide the vinyl sleeve (8) over the arm of the inside release handle.

**NOTE:** The Spring Latches, Striker Plates and Lock Cables are to be assembled after the door and all other hardware is in place.

## #1 Snap Latch

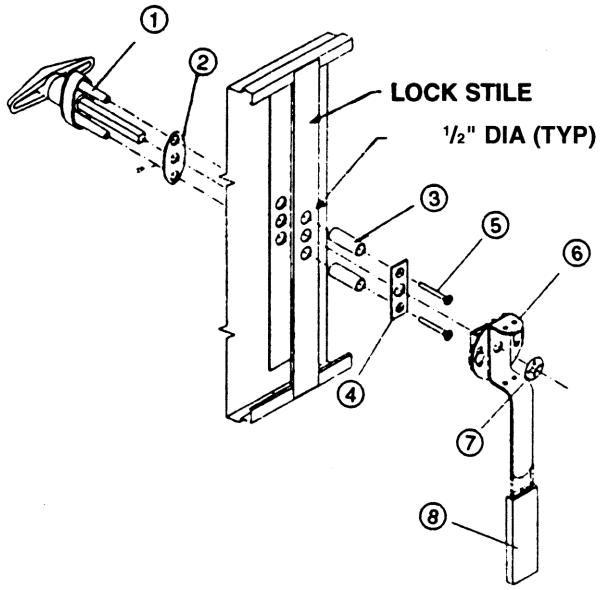


| No. | QTY. | DESCRIPTION |
|---|---|---|
| 1 | 1 | Outside "T" Handle |
| 2 | 1 | Foam Gasket |
| 3 | 2 | Lock Spacers |
| 4 | 1 | Backing Plate |
| 5 | 2 | #10 - 24 Machine Screws |
| 6 | 1 | Inside Release Handle |
| 7 | 1 | Tinnerman Nut |
| 8 | 1 | Vinyl Sleeve |

Key blanks are available through Clopay.

Fig. 20

## #3 Lock Bar
## LOCK ASSEMBLY INSTRUCTIONS

1. Position the two green Tinnerman nuts (1) as shown in the front skin of the door. Attach the outside escutcheon plate (2) to the door by inserting two #10x1" countersunk slotted screws (15) through the plate into the two Tinnerman nuts. (FIG. 21)

2. Insert the spacer tube (9) from the outside face of the door into the predrilled hole by slightly squeezing the ring. Position the cylinder back plate (12) for attachment of the cylinder lock (11) and collar (10) with the screws (16) as shown. (Indent of back plate to face of door.) (FIG. 21)

3. Attach the inside escutcheon plate (3) to the inside of the door using two #10x1" screws (15) inserted directly into the lock stile. (FIG. 21)

4. Insert the outside T-handle (4) through the door, placing the lock bar assembly (6) through the square spindle of the T-handle from the inside. Next, trap the lock bar assembly by slipping the inside T-handle (7) over the spindle and inserting the roll pin (8) through a hole in the spindle. (FIG. 21)

Steps 5 and 6 can be completed after the vertical track is installed (refer to page 21).

5. Slide an equal number of lock bar guides on each lock bar and line up each bar with the slot in the vertical track after the vertical track is installed. Attach one lock bar guide to each end stile using #14 x 5/8" sheet metal screws. (FIG. 22)

6. If your door is over 10 feet wide, space on the other two lock bar guides equally over the other center stiles and attach each lock bar guide with two #14 x 5/8" sheet metal screws. (FIG. 22)

7. Attach the night latch (13) to the lock stile using the #10x1 1/2" sheet metal screws (17). The lock bar spring (14) should be hooked to the left lock bar. (This is done with door in the unlocked position.) (FIG. 21)

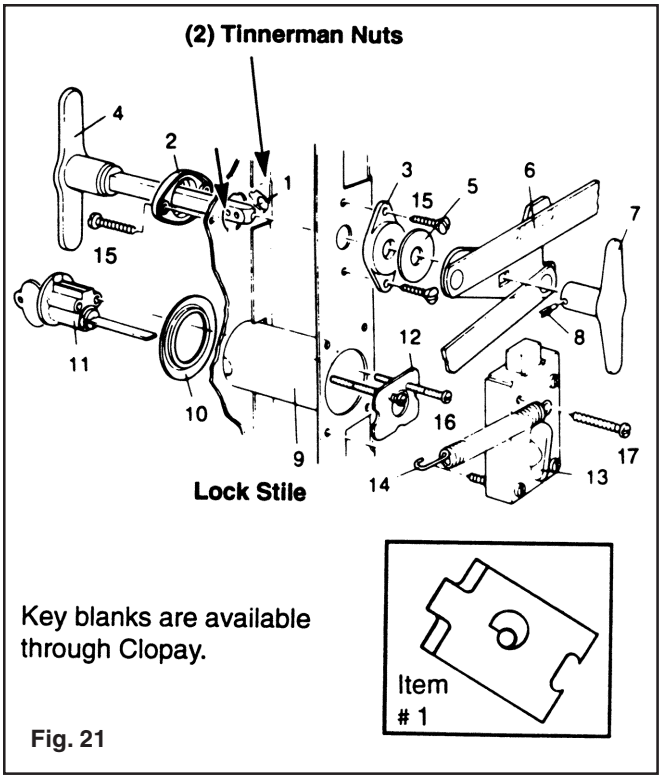

Fig. 21

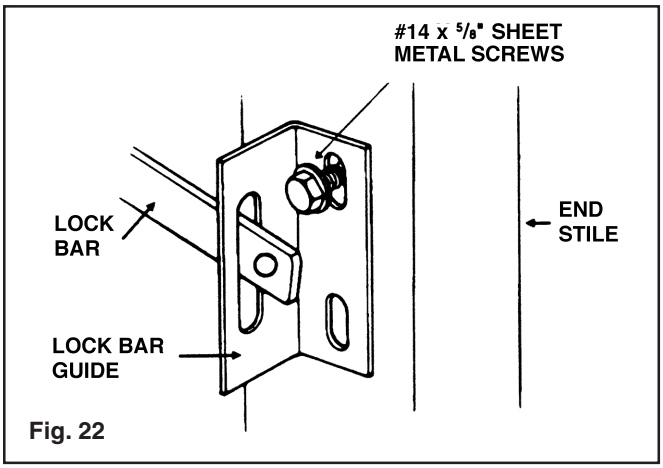

Fig. 22

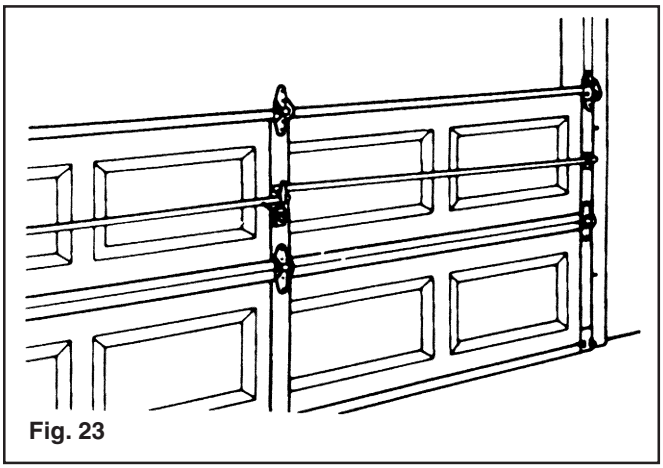
Fig. 23

# Installing Door Sections
**(Continued)**

**Step 8:** Place the second section on top of the first section. Drive a 3" nail in the jambs at each end and bend it over the edges of the section to hold the section in place. Attach the hinges from the top of the first section to the bottom of the second. (FIG. 23)

**Step 9:** Place the third section on saw horses. Attach #3 hinges to the ends at the top edge and #1 hinges to all other stiles along the top edge. (FIG. 24)

**NOTE:** If your door was supplied with more than 1 strut, attach one in the same manner as shown in FIG. 24A. (Consult chart on top of page 15.) DO NOT use the pre-drilled holes in the strut. Attach strut with strut clips provided.

**Step 10:** Place the third section on top of the other sections and nail in place as before. Attach the hinges from the top of the previous section to the bottom of this section. (FIG. 25)

If you have two sections left, repeat Steps 9 and 10 using #4 hinges on the end of the top edge and #1 hinges to all other stiles along the top edge.

**Step 11:** Place the last section on the saw horses. Attach the top roller brackets as shown. The top roller brackets are to be attached with three (insulated doors) or four (non-insulated doors) #14 x 5/8" sheet metal screws. The top of the bracket should be located 3 1/4" down from the top of the door. The bottom of the bracket goes in smaller holes 6 1/4" from top of section. (FIG. 26)

If your door was supplied with any struts one will be attached to the top section as shown. (FIG. 26) (Consult chart on top of page 15.) DO NOT use the pre-drilled holes in the strut. Attach strut with strut clips provided.

**Insulated Doors Only**
On doors that require strut(s)—refer to strut chart on page 15—the strut clips on the center stiles are positioned differently. The strut clips must be positioned with the straight edge up. (FIG. 27)

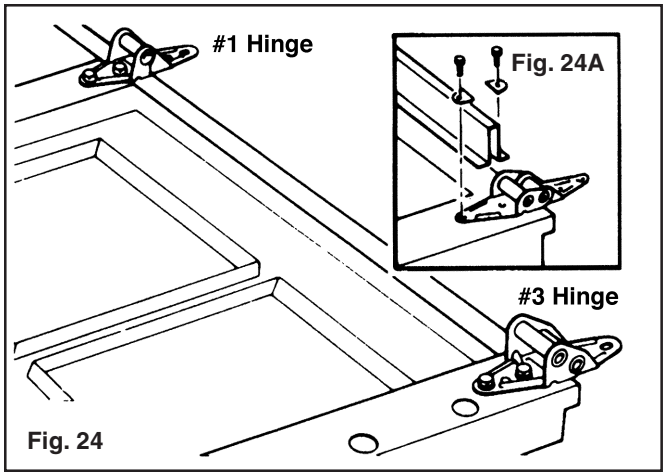

Fig. 24

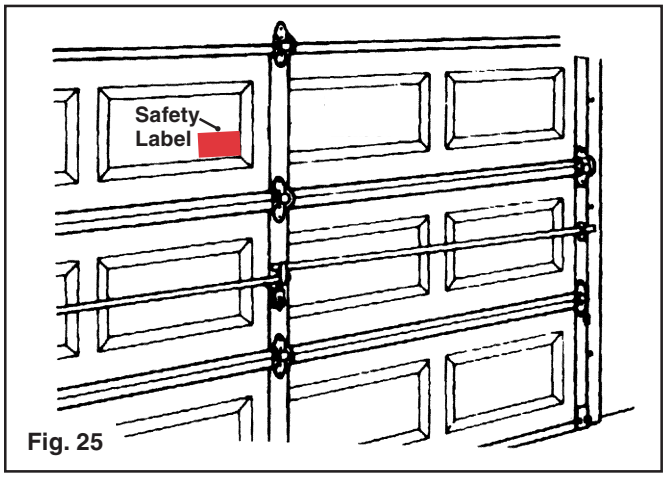

Fig. 25

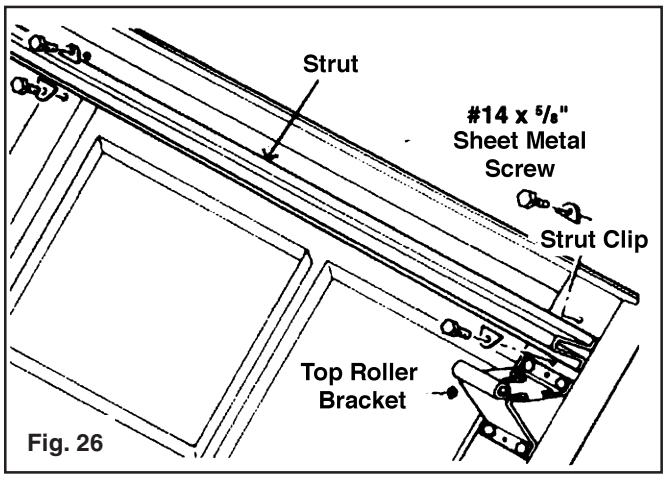

Fig. 26

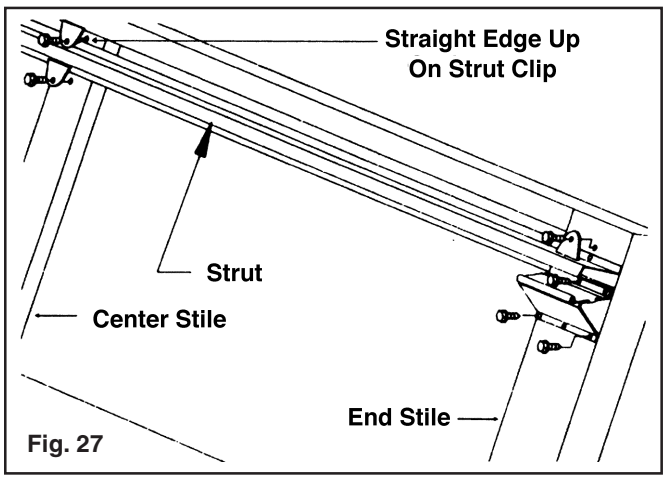

Fig. 27

**Step 12:** Place the last section on top of the others and nail in place as before. Attach the hinges from the top of the previous section to the bottom of this section.

Place a roller in the top and bottom brackets and in the tubes in each of the hinges at the ends of each section. Some hinges have two tubes. Place the roller in the tube that is farthest from the face of the door. (FIG. 28)

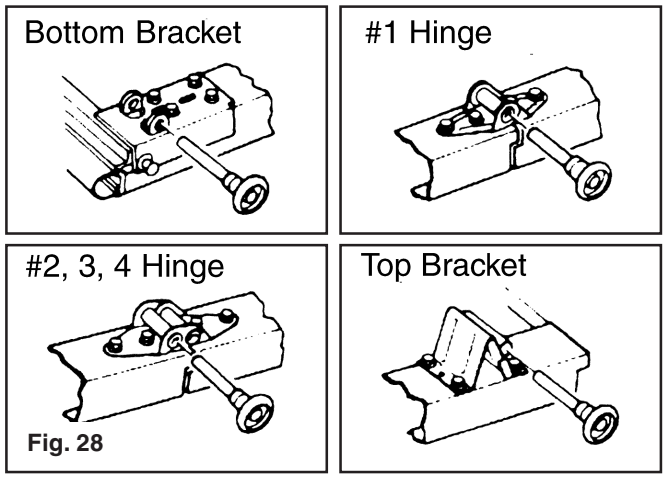

Fig. 28

## Assembling and Installing the Track

Before assembling brackets to vertical track be sure to read Step 1 and Step 2. Refer to illustration for placement of brackets on track.

**NOTE:** Brackets may already be riveted in place. If additional adjustment is required, the rivets can be drilled out and the brackets can be reattached with track bolts and flange nuts.

**WARNING**

**To avoid installation problems which could result in injury or property damage, use only track provided with new door.**

**Step 1:** Loosely fasten the track brackets to the vertical track using one 1/4" x 5/8" track bolt and 1/4" flange nut as shown with the head of the bolt inside the track. There are two sizes of brackets. The smaller bracket goes closest to the bottom end. The flat side of the track goes toward the wall. (FIG. 31)

**Step 2:** Loosely attach the flag bracket to the top of the track with two 1/4" x 5/8" track bolts and 1/4" flange nuts with the head of the bolts in the track. (FIG. 29-30)

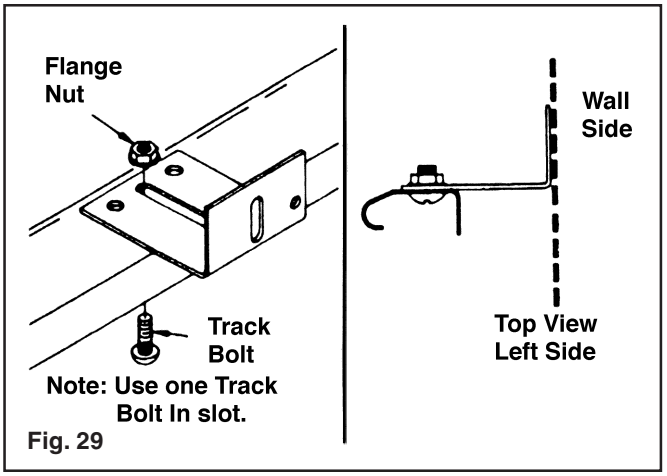

Fig. 29

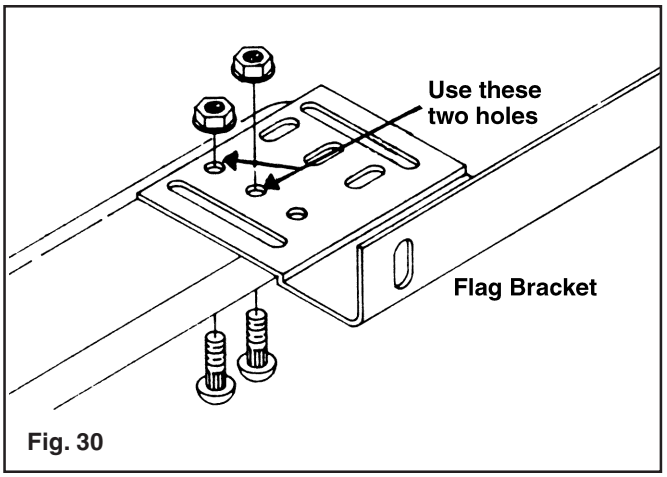

Fig. 30

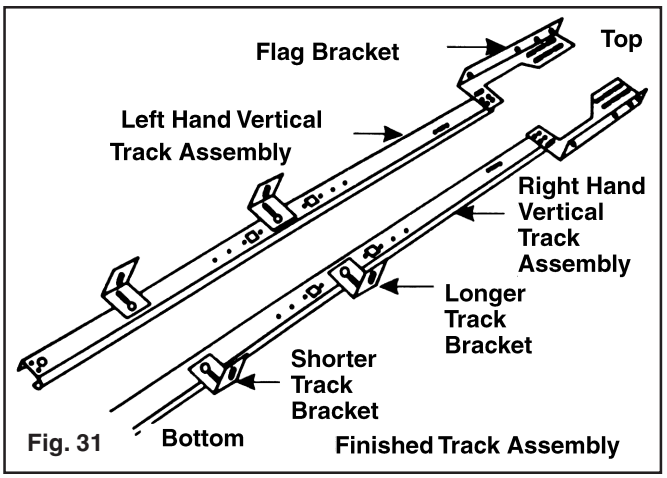

Fig. 31

**Step 3:** Place the track over the rollers on the door. Move the track close to the door so that the rollers are all the way into the hinges. Do not force the track too tightly or the door will bind. There should be 3/8" between the edge of the door and the track. Pilot holes of 3/16" are required at each lag screw location before installing the lag screw. Lift track about 1/2" from the floor and fasten the flag bracket and track brackets to the jamb with 5/16" x 1 5/8" lag screws. The flag bracket requires three screws, one each in the top, middle, and bottom holes. Do this for both sides of the door. When the track brackets and flag brackets are securely fastened to the jamb, tighten the track bolts and flange nuts connecting the flag brackets to the tracks. (FIG. 32)

**NOTE:** The tops of the vertical tracks must be level with each other. Check this by measuring from the top of the door sections to the top of the track on both sides. If they are not equal, cut some material off the bottom of one track to lower it or raise the other track. Do not raise track beyond the bottom rollers on the bottom section of door.

**Step 4:** Fasten the horizontal angle to the horizontal (curved) track with two 1/4" x 5/8" track bolts and 1/4" flange nuts so that the heads of the track bolts are on the inside of the track. On some doors this angle may be 82" long and will require three additional fasteners per side. If the angle has been pre-assembled, skip Step 4 and proceed with Step 5. (FIG. 33)

**Step 5:** Temporarily support the rear end of the track with a rope from the trusses overhead in the garage or on a tall ladder. (FIG. 34)

**Step 6:** Place the track over the roller in the top bracket. Attach the curved end of the horizontal track to the flag bracket with two 1/4" x 5/8" track bolts and 1/4" flange nuts so that the heads of the screws are on the inside of the track. Attach the end of the horizontal angle to the top of the flag bracket with a 3/8" x 3/4" carriage bolt and 3/8" hex nut. The horizontal and vertical track must join together to form a continuous channel for the rollers. (FIG. 35)

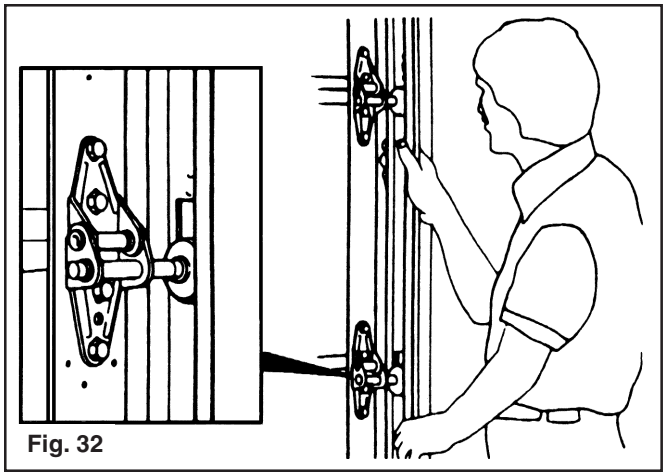

Fig. 32

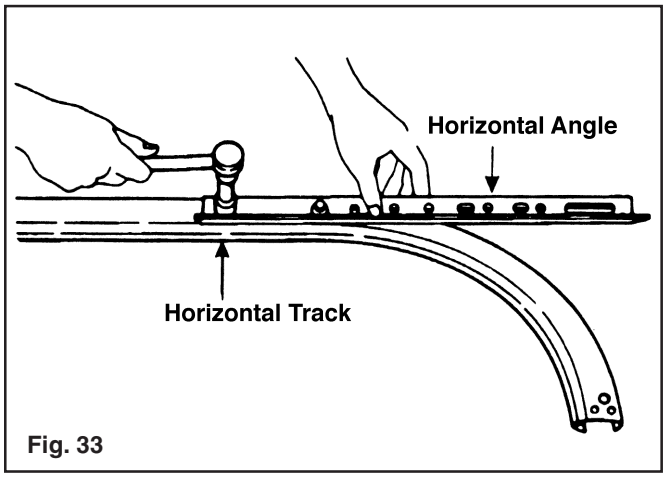


Fig. 33

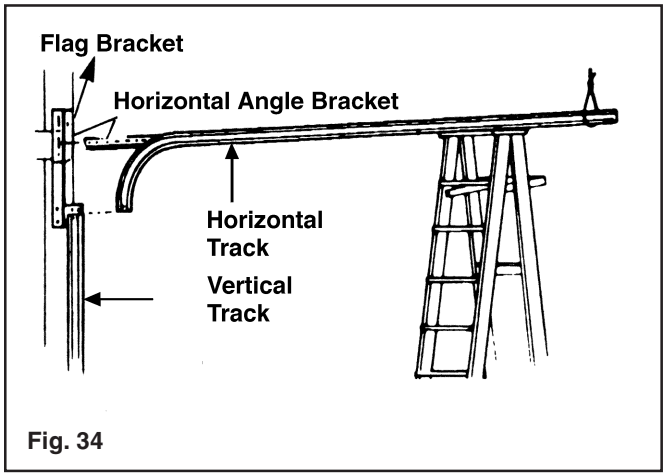


Fig. 34

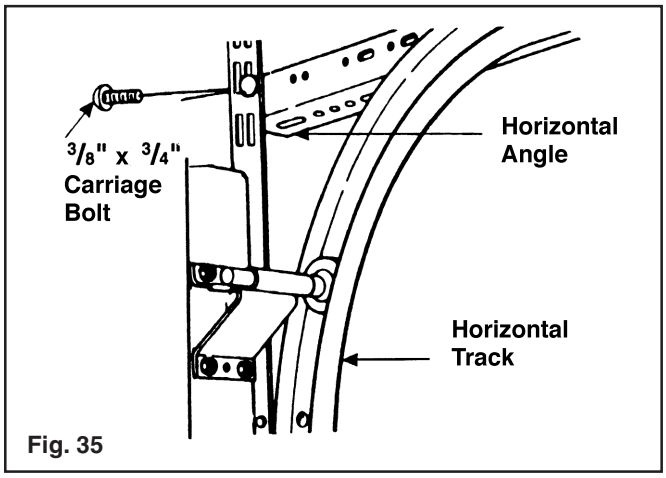


Fig. 35

**Step 7:** Rear track hangers need to be made at this time. Use 13 gauge or 3/32" material. These are not provided with the standard hardware. They are used to attach the rear of the horizontal track to the ceiling joist. Enough angle iron or punched angle should be purchased to make two rear track hangers. These hangers must be strong enough to hold the full weight of the door. Attach a bolt at least 1" long through the end of each track to stop the door at the end of its travel. (FIG. 36)

**WARNING**

**Sway braces must be used to prevent tracks from spreading and allowing door to fall. Bolts placed in the end of each track (FIG. 38) must be at least 1" long to prevent the top section from exiting the track.**

**Step 8:** Placement of rear track hangers is critical for the door to operate properly. The rear track hangers should hold the horizontal track level and square to the door. Squareness should be measured by comparing two diagonal distances: 1) the distance from the top left hand corner of the door to the rear of the right hand horizontal track and 2) the distance from the top right hand corner of the door to the rear of the left hand horizontal track.

Adjust the position of the tracks if the squareness distances are not within 1/2" of each other. Horizontal track can be out of level up to 1" from front jamb to rear track hanger. (FIG. 37)

When the track is square and level with the opening, the track hangers can be fastened permanently to the ceiling trusses. Three 5/16" x 1 1/2" lag screws are recommended. Be sure 3/16" pilot holes are drilled before installing 5/16" lag screws. The attachment must be strong enough to hold the weight of the door. (FIG. 37)

**WARNING**

**Use adequate length screws to fasten rear track hangers into trusses. Door may fall and cause serious injury if not properly secured.**

**Step 9:** With the track installed, the top door section can now be properly adjusted. With the slide on the top bracket loose, force the top of the door against the stop molding or door jamb. Pull the roller towards you so it is tight against the groove in the track and tighten the slide bolts. (FIG. 38 and 39)

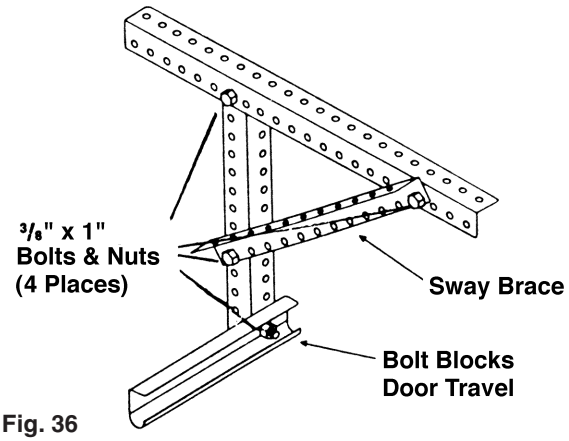

Fig. 36

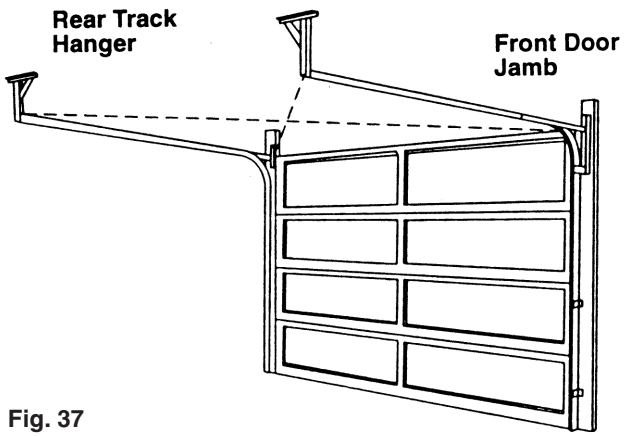

Fig. 37

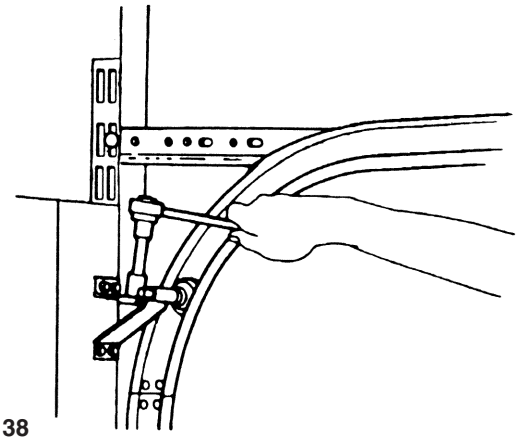
Fig. 38

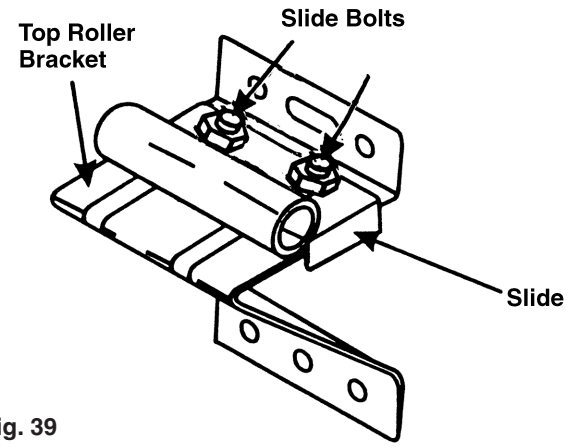

Fig. 39

**Step 10: Completing the Lock Assembly**
(doors with locks only)

**NOTE: If your door is going to be equipped with an automatic garage door opener, make sure that the door is always unlocked when the opener is being used. This will avoid damage to the door.**

## #3 Lock Bar ASSEMBLY INSTRUCTIONS FOR LOCK BAR GUIDES

Adjust the lock bar guides so that the lock bars enter the lock holes in the track at both sides of the door. Fasten each lock bar guide with two #14 x 5/8" sheet metal screws. (FIG. 40)

## # 1 Snap Latch ASSEMBLY INSTRUCTIONS FOR SPRING LATCHES AND STRIKER PLATES

**NOTE:** If attaching an automatic garage door opener, the spring latches and striker plates should not be installed.

**Step 1:** Once the door is completely assembled attach the striker plate (1) to the track using two 1/4" x 5/8" track bolts (2) and two 1/4" flange nuts (3). Insert bolts through the two 9/32" holes located top and bottom of the large knock-out. NOTE: Be sure the striker plate wraps around the back of the track as shown. Do not tighten. (FIG. 41)

**Step 2:** Place the spring latch (4) on the end stile of the door section and align the spring latch with the striker and the holes in the stile. Secure using two #14 x 5/8" sheet metal screws (5). Make sure that the striker fits around the spring latch and secure in place.

## For Lock Cables

**NOTE:** If the lock is located in the center of the door width, cut lock cable (6) in half and go to step three.

**Step 1:** Rotate the inside release handle counter clockwise until it stops. Measure from the top left hole in the handle to the end of the left spring latch.

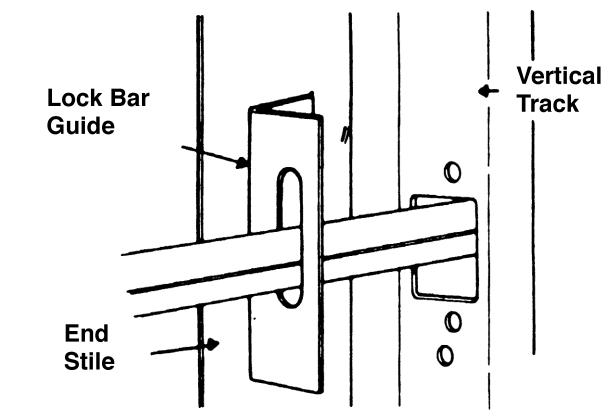

Fig. 40

## #1 Snap Latch

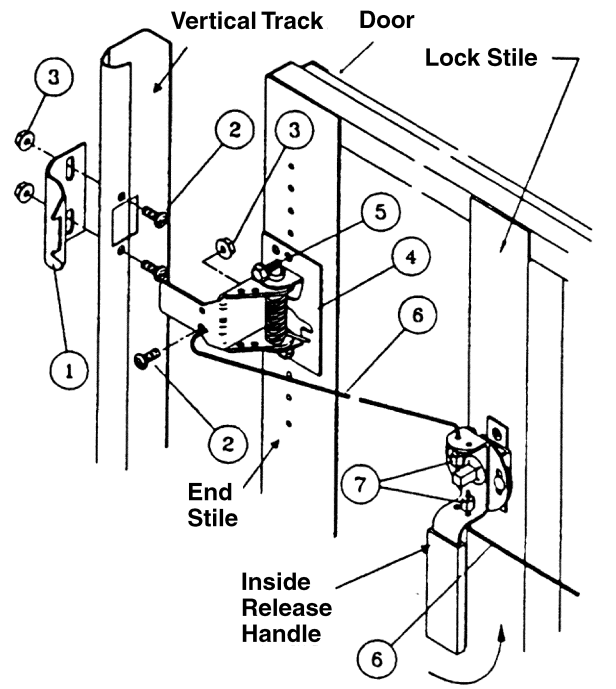


| NO. | QTY. | DESCRIPTION |
|---|---|---|
| 1 | 2 | Striker Plate |
| 2 | 6 | 1/4" - 20 x 5/8" Track Bolt |
| 3 | 6 | 1/4" - 20 x Hex Washer-Hd Nut |
| 4 | 2 | Spring Latch |
| 5 | 4 | #14 x 5/8" Sheet Metal Screw |
| 6 | 1 | Lock Cable (To Be Cut) |
| 7 | 2 | Cable Stop (Pre-Attached) |

Fig. 41

**Step 2:** Take the lock cable (6) and, using the measurement just obtained, measure from the inside of the cable stop (7) and cut cable.

**Step 3:** Thread the cable through the left hole in the top of the inside release handle from the underside until the stop button comes into contact with the handle. Extend the cable to the left spring latch and feed the end of the cable into the hole as shown, and secure in place with one 1/4" x 5/8" track bolt (2) and 1/4" nut (3).

**NOTE:** Be sure to pull cable taut before securing in place.

**Step 4:** Repeat for other side using the remaining cable and the right hole on the lower part of the handle. Some torsion spring doors only have one cable.

## #2 Slide Bolt

The inside bolt is installed on the end stile of the second section using (4) #14 x 5/8" hex head sheet metal screws. The slide bolt rests against the top of one of the rectangular engaging slots in the vertical track. Proper alignment is easier to achieve by using track as a guide. (FIG. 42)

**NOTE:** 3/16" holes may have to be pre-drilled before installing screws.

## Pull Rope (Manually Operated Doors)

**Step 11:** To complete the door section installation, tie the pull rope provided to the bottom roller shaft. (FIG. 43)

**WARNING**

**In order to avoid the risk of strangulation, the pull rope must be removed when installing an electric opener.**

**Step 12:** At this time, remove the 3" nails which were used to hold sections in place prior to installation of the track assembly. (Refer back to FIG. 17).

**NOTE:** Proceed to springing instructions that match your door.

## #2 Slide Bolt

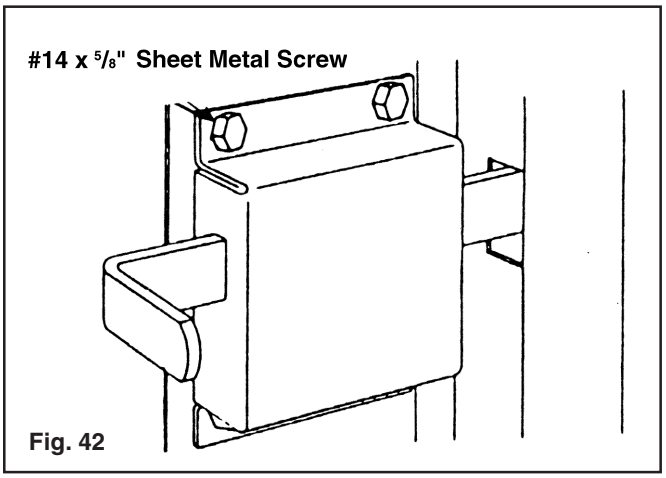


Fig. 42

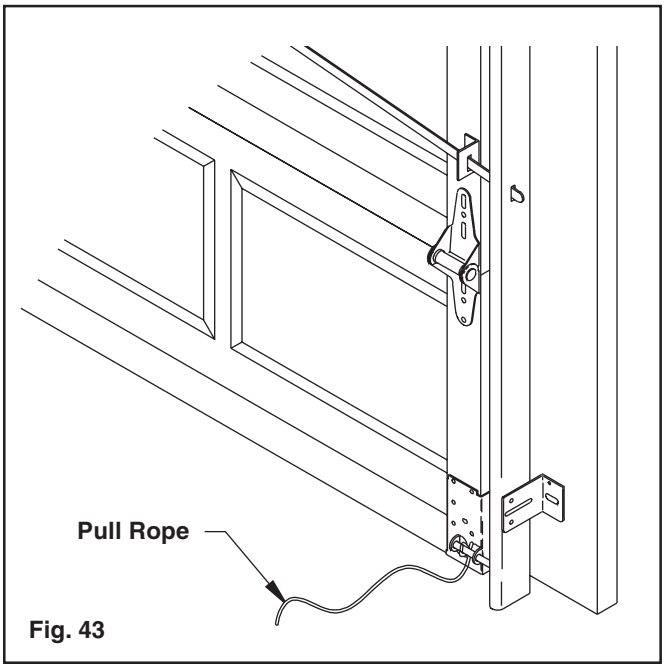


Fig. 43

# Assembling and Installing Extension Springs

If you have torsion springs, go directly to page 28. If you have EZ-Set Torsion or Extension Springs™, refer to the supplemental instructions provided with the spring kit.

**Step 1:** Some doors will be supplied with two springs and some will have four. Assemble springs with sheaves on the floor. A 3/8" x 1 1/4" bolt and nut are used to attach the sheave. (FIG. EXT-1)

**NOTE:** If your door was supplied with four large extension springs, take notice of the color coding on the ends of the springs. If the color codes on two of the springs are different from the other two, be sure to use one of each on each side so that the spring tension is equal on both sides.

**Step 2:** Attach a sheave in the 3rd hole on the angle approximately 4 inches from the wall on both sides. Use a 3/8" x 1 1/4" bolt, 3/8" washer and nut. The head of the bolt must be on the door side. (FIG. EXT-2)

**Step 3:** Attach the eye bolts with one 5/16" nut on each side of the rear hanger. The eyebolts should be about 12 inches above the track to keep the spring assembly from dragging on the track. The eyebolts can be as low as 4 inches above the track if you have space problems. Tighten the eyebolt nuts. (FIG. EXT-3)

**Step 4:** Carefully raise the door and prop it about halfway open. (FIG. EXT-4)

**WARNING**

**This is the first time the new door is being opened. If the tracks are not correctly aligned or the back hangers are not strong enough the door may fall. Also, the door will be very heavy without the help of the springs. Have two or more people help you. Proceed slowly and carefully.**

Check to be sure the horizontal tracks are parallel with each side of the door. With the door about halfway open, make sure the rollers do not come out of the top brackets more than about 1/2". If adjustment of the rear hangers is necessary, lower the door first because the weight of the door is supported by the rear hangers.

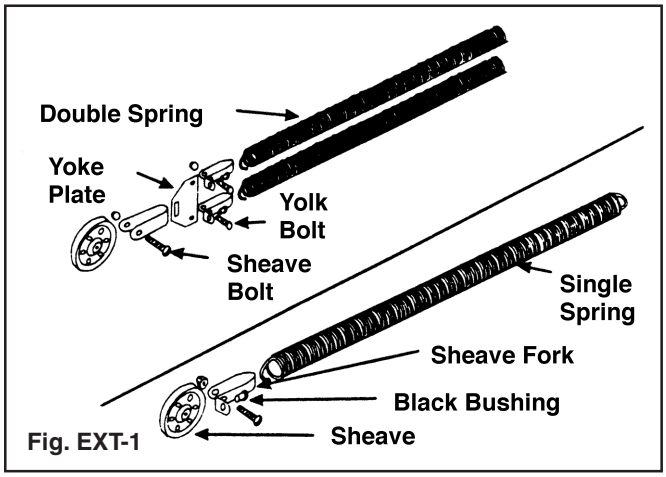

Fig. EXT-1

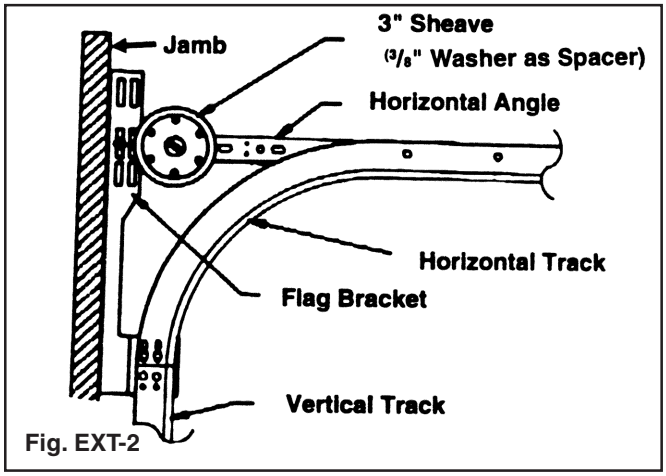

Fig. EXT-2

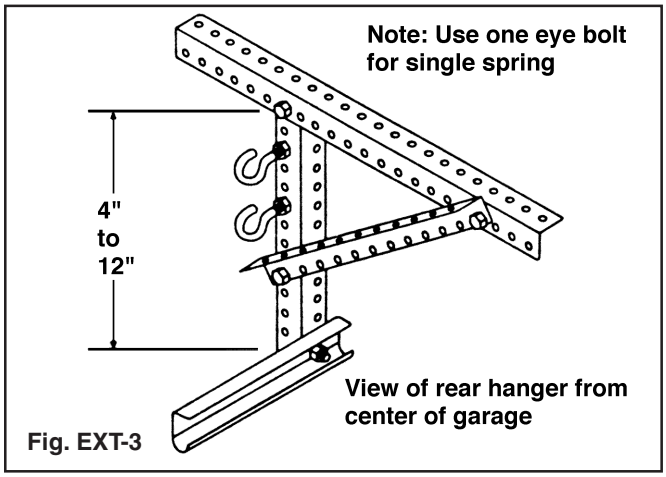

Fig. EXT-3

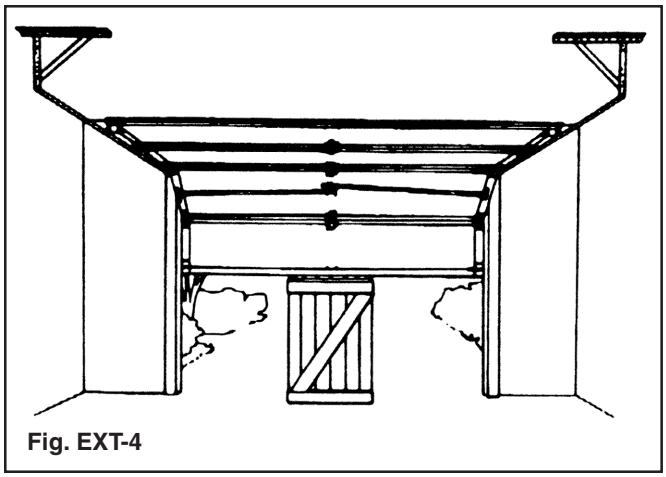
Fig. EXT-4

**Step 5:** Carefully raise the door to fully open position. Place “C” clamps on both sides of the track below the bottom rollers to keep the door from falling closed. (FIG. EXT-5)

Check again to be sure the horizontal tracks are parallel with the edges of the door. The rollers must not come out of the hinges or brackets.

**Step 6:** Hook the ends of the springs over the eyebolts at the rear track hangers.

Attach the loop of a cable over the button on the bottom bracket, if not done so already. Thread the cable up over the stationary sheave. (FIG. EXT-6)

Continue the cable over and around the sheave on the springs. (FIG. EXT-7)

**Step 7:** Tie the cable to the three hole adjusting clip exactly as shown in FIG. EXT-8A. Hook the cable to the horizontal angle with an “S” hook. Adjust the knot at the three hole adjusting clip. Adjust so that all spring tension is relieved and the cable holds the springs above the horizontal track. The springs should be stretched the same on both sides of the door. (FIG. EXT-8)

**Important:** Attach the warning tag found in the white envelope with orange print to the spring assembly (This tag may already be attached). (FIG. EXT-9)

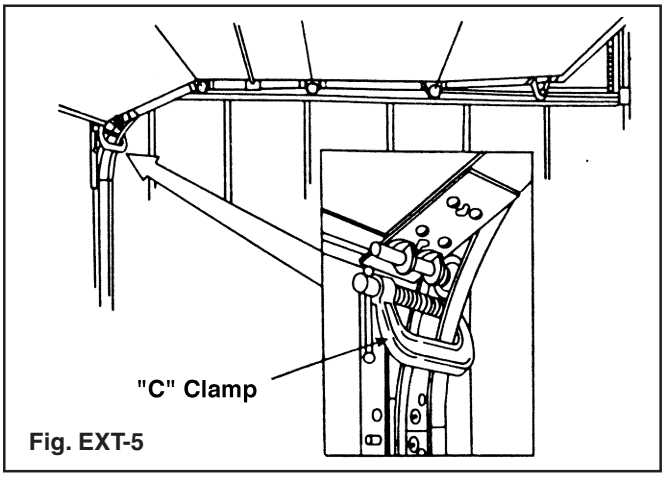

Fig. EXT-5

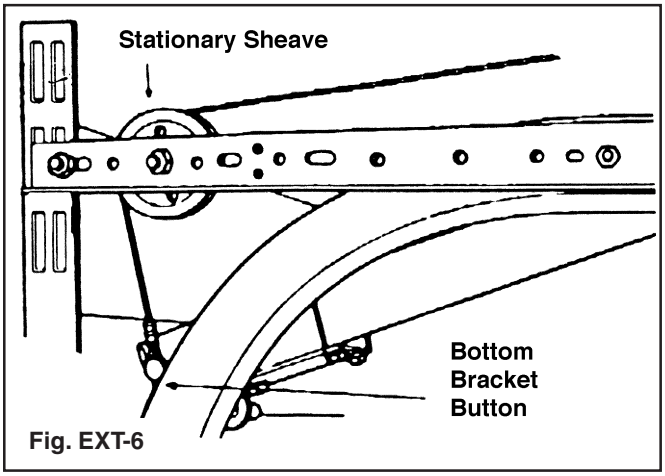

Fig. EXT-6

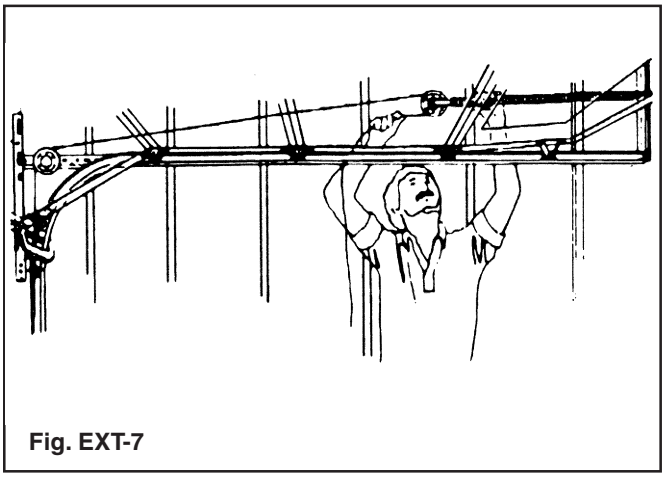
Fig. EXT-7

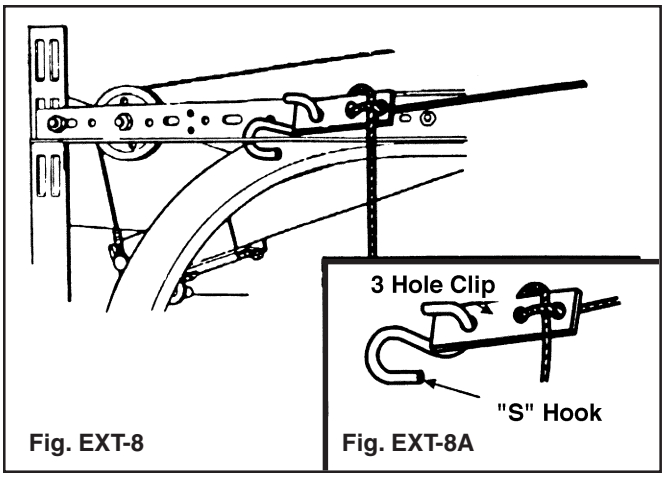

Fig. EXT-8

Fig. EXT-8A

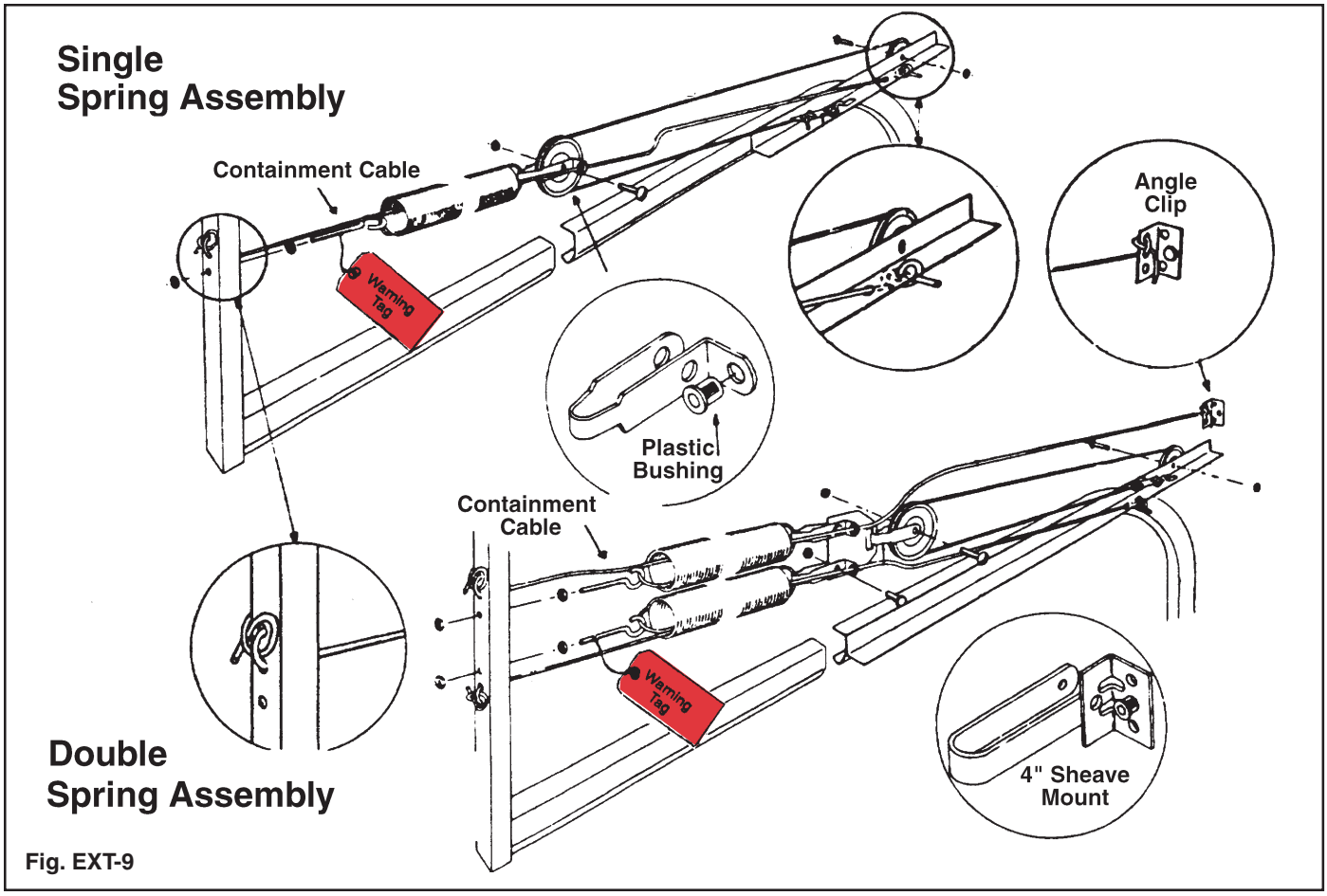

Fig. EXT-9

# Installing Safety Containment Kit

**WARNING**

**Garage door extension springs can cause serious injury and property damage if they break under tension and are not secured with safety cables. Do not neglect the following step.**

**Step 8:** Tie one end of the ⅛" containment cable to the rear track hangers. Tie the cable as shown in the illustration (FIG. EXT-9). Thread the cable through the center of the extension spring and through the bushing in the sheave fork. Tie the remaining end to the horizontal angle as shown. This must be done for each of the springs.

**NOTE:** If your door has four extension springs, tie the upper containment cable to an angle clip mounted to the jamb. (FIG. EXT-9)

# Torsion Spring Installation

| Winding Chart | |
|---|---|
| Door Height | Spring Turns |
| 6'0" | 6.75 |
| 6'3" | 7.00 |
| 6'6" | 7.25 |
| 6'9" | 7.50 |
| 7'0" | 7.75 |
| 7'3" | 8.00 |
| 7'6" | 8.25 |
| 7'9" | 8.50 |
| 8'0" | 8.75 |

**Number of turns on the spring can be counted by drawing a chalk line on them. Doors with two springs are wound the same number of turns on each spring.**

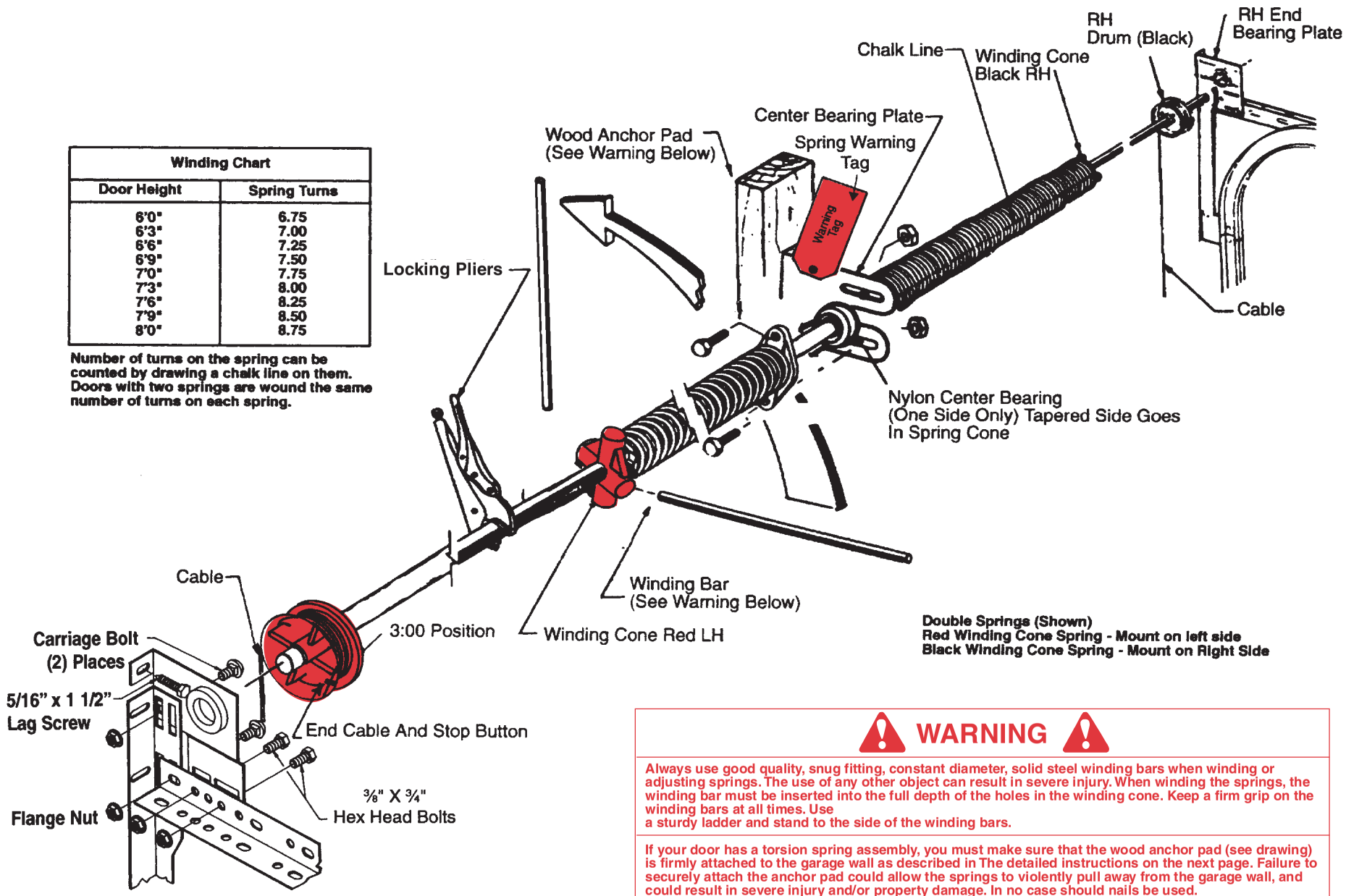


**Double Springs (Shown)**
**Red Winding Cone Spring - Mount on left side**
**Black Winding Cone Spring - Mount on Right Side**

Fig.TOR-1

## WARNING

Always use good quality, snug fitting, constant diameter, solid steel winding bars when winding or adjusting springs. The use of any other object can result in severe injury. When winding the springs, the winding bar must be inserted into the full depth of the holes in the winding cone. Keep a firm grip on the winding bars at all times. Use
a sturdy ladder and stand to the side of the winding bars.

If your door has a torsion spring assembly, you must make sure that the wood anchor pad (see drawing) is firmly attached to the garage wall as described in The detailed instructions on the next page. Failure to securely attach the anchor pad could allow the springs to violently pull away from the garage wall, and could result in severe injury and/or property damage. In no case should nails be used.

# Torsion Spring Installation

## (For EZ-Set Torsion Spring™, See Supplemental Instructions)

### PRECAUTIONS

**WARNING**

**Torsion springs can be very dangerous if they are improperly installed or mishandled. Do not attempt to install them yourself unless 1) you have the right tools and reasonable mechanical aptitude or experience and 2) you follow these Instructions very carefully.**

Tools Required for Torsion Spring Installation:
1. Drill
2. 3/16" drill bit
3. Two 9/16" box wrenches
4. 7/16" socket wrench
5. 3/8" box wrench
6. Two 1/2" diameter, 18" long cold rolled solid steel winding bars (NOTE: Winding bars are available at most hardware stores)
7. Locking pliers

### Step 1

**It is important that the torsion spring assembly be firmly and securely attached to the frame of the garage.**

Refer to Figure 8, page 13 for the configuration of 2"x 6" wood jambs. **Important:** The wood anchor pad must be made of a Grade 2 or better Southern Yellow Pine (also known as Southern Pine or Yellow Pine). The Southern Yellow Pine must be free of splits and cracks. **Do not use wood labelled as Spruce Pine Fir (or SPF).**

Each side jamb and the center anchor pad should extend 12" above the top of the opening for 12" radius horizontal track and 15" above the top of the opening for 15" radius horizontal track.

The wood anchor pad must be installed into the frame of the garage with at least four 3/8" x 4" long lag screws (one at each corner). The four lag screws must be installed no closer than 1 1/2" from the sides and the ends of the 2 x 6. These lag screws must fasten into the wood frame of the garage, not the drywall or sheet rock. The wood anchor pad and 3/8" x 4" lag screws are not supplied. **Do not use nails.**

**NOTE:** The wood anchor pad can be off-center to the width of the opening by up to 10" in either direction.

### Step 2

Lock the door in the down position securely. This must be done to prevent the door from prematurely opening which could cause an injury!

**NOTE:** You need an assistant in Step 4. If your garage has only one entrance, be sure you, the assistant, and the tools you need are inside before you lock the door. Your door will have either one or two torsion springs. Each torsion spring consists of spring coils, stationary cone, and a winding cone (FIG. TOR-1). The spring coils are color coded depending on the spring size and the **winding cone** is color coded separately, either **red** or **black**. The color on the winding cone is to help identify on which side of the door the spring is to be used.

**Black winding cone torsion springs are used on the right side of the door and red winding cone torsion springs are used on the left side of the door when viewing the door from the inside looking out. Failure to install the torsion springs on the correct side will cause your door to function improperly and could result in serious injury. (NOTE: If you have low headroom, these instructions DO NOT APPLY. Consult supplemental low headroom instructions.)**

Slip the torsion springs onto the spring tube. The **red** winding cone on the **left** end, the nylon center bearing, center bearing plate, and the **black** winding cone torsion spring on the **right** end. (FIG. TOR-2) Cable drums go on next. The **red** drum on the left, **black** drum on the right. The set screws on the drums face the springs.

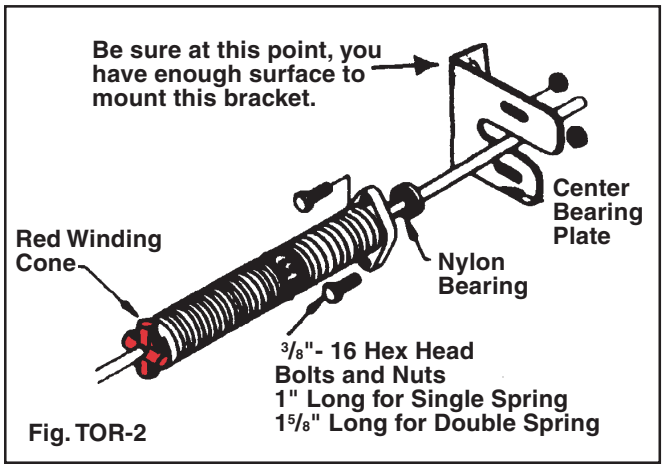

Fig. TOR-2

## Step 3

Fasten the bottom of the end bearing plate to the horizontal angle with (2) 3/8" x 3/4" long hex head bolts and hex nuts. The bottom of the end bearing plate is identified by two parallel rows of two slots. Please make sure to use the bottom two slots for 12" radius horizontal track, and the upper two slots for 15" radius horizontal track. When properly mounted the torsion tube is level and straight. (FIG. TOR-3)

**Before installing any lag screws, it is important to drill 3/16" pilot holes where the lag screws are to be attached.** Fasten the wall flange on the end bearing plate to the wood jamb with (1) 5/16" x 1 5/8" long lag screw. Drill 3/16" pilot holes where lag screws are to be installed. On 12" radius horizontal track, each end bearing plate should also be attached with 3/8" x 3/4" carriage bolts and 3/8" nuts. (FIG. TOR-3)

## Step 4

With an assistant, lift the complete torsion spring tube assembly and slide the ends of the tube into the bearing on the end bearing plates. With the tube level, mount the center bearing plate to the center anchor pad using (2) 5/16" x 1 5/8" long lag, red-coated screws.

**NOTE:** Red coated fasteners must be installed for the attachment of center bearing plate to indicate this part will be under extreme tension once spring is wound. (FIG. TOR-4)

Before mounting the center bearing plate, drill (2) 3/16" pilot holes for the lag screws. These pilot holes must be no closer than 1 1/2" from the sides and ends of the wood anchor pad. The center bearing plate resists the considerable counter torque of the springs. This wood anchor pad must be installed to the frame of the garage as stated in **Step 1.**

## Step 5

The cable that is attached to each bottom bracket is brought up between the wall and roller shafts to the cable drum. This cable is placed in the notch on the cable drum. Turning the cable drum and sliding it up tight against the end bearing plate removes the cable slack. **Make sure the cable follows the groves in the cable drum.** The set screws on the cable drum should be tightened with a 3/8" box wrench while holding the cable taut. Locking pliers clamped to the torsion spring tube maintain tension on the cable. (FIG. TOR-1) This procedure should be repeated on the opposite side.

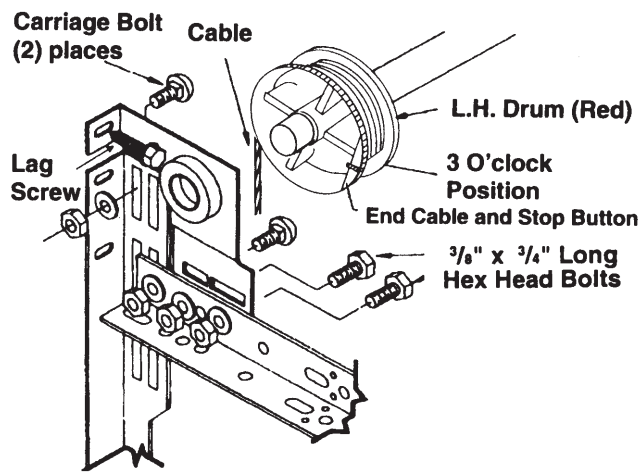

Fig. TOR-3

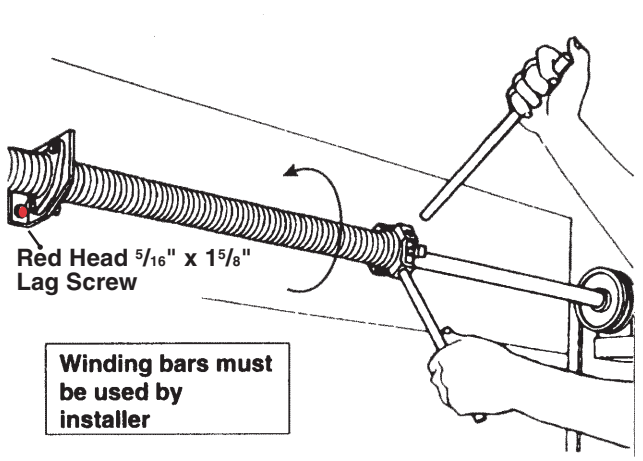

Fig. TOR-4

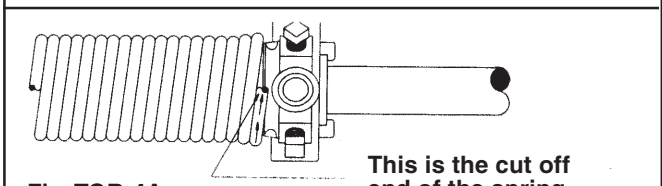

Fig. TOR-4A

## Step 6

Draw a chalk line across the spring(s). This will be used to indicate the number of turns on the spring(s). After inserting the two winding bars all the way into the winding cone, wind the springs 1/4 turn at a time in an upward direction as shown in FIG. TOR-4. The number of turns is shown in the table in FIG. TOR-1. The tail of the torsion spring coil points in the direction that the spring is wound. (FIG. TOR-4A)

**WARNING**

**NEVER use screwdrivers or other substitutes for winding bars! Stand to the side of bars. Be sure to insert the bars all the way into the hole.**

Secure each spring with the set screws on the winding cone. (**Caution:** Set screws should be turned from 3/4 to one full turn after they have made contact with the tube.) On doors with two torsion springs, each torsion spring should be wound the same number of turns. Remove the locking pliers.

### Step 7

Unlock the door, slowly raise the door and prop it about halfway open.

**WARNING**

**This is the first time the new door is being opened. If the tracks are not correctly aligned or the back hangers are not strong enough, the door may fall. Proceed slowly and carefully.**

Check to be sure the horizontal tracks are parallel with each side of the door. Make sure all the lag screws are securely fastened. With the door about halfway open, make sure the rollers do not come out of the top brackets more than about 1/2 inch. If adjustment of the rear track hanger is necessary, the door must be locked in the closed position because the weight of the door is supported by the rear hangers.

**NOTE:** If the torsion springs do not increase in tension as the 1/4 turns are added to the springs, then you probably have the torsion springs reversed. (See **Step 2.**)

### Step 8

To adjust torsion spring tension, the door is locked in the down position. With locking pliers clamped on the torsion tube, winding bars are used to wind the springs tighter to increase tension. Tension is reduced by removing turns. When two springs are used, both sides should be adjusted the same. Adjustments should be made in 1/4 turn increments.

**WARNING**

**NEVER adjust center bearing plate or red-coated fasteners after springs are wound. Be prepared to handle a strong force when reducing tension on a torsion spring. Use winding bars only, and stand to the side.**

# Maintenance/Adjust./ Options

## Checking & Adjusting the Door

**The door should open and close easily.** With proper adjustment the door will hang into the opening 4" to 6". An electric opener can be adjusted so the door is pulled completely even with the opening. If the door is difficult to open but falls closed, more spring tension is required. If the door opens by itself and is difficult to close, less spring tension is required.

**To adjust extension spring tension,** use two "C" clamps to carefully clamp the door in the open position. Tension can be changed by moving the "S" hooks to different holes in the horizontal track angles or by adjusting the cable in the three hole clip. Both sides must be adjusted equally. Moving the hooks closer to the door opening increases tension.

Tension can also be adjusted slightly by releasing spring tension and relocating the eyebolts higher on the track hanger. When reinstalling, the higher the eyebolt, the greater the tension.

**WARNING**

**Use extreme care when readjusting extension springs and make sure that the door is carefully secured by "C" clamps in the open position before you begin. When the door is closed, the springs and mounting hardware are under extreme tension and are potentially dangerous.**

Binding of the door near closed and/or open position requires the track positioning to be checked. The track can be moved away from the door by adjusting the jamb or flag brackets. Care must be taken that the rollers remain in the hinges and do not come out of top roller brackets. Binding can also occur if the molding is attached too tightly against door. The door stop molding should be repositioned lightly against the door. Allow the thickness of a dime between the door stop molding and the door.

**Do not attempt to adjust or repair torsion springs. You may not be prepared to handle the release of spring forces. Call a professional door service company for repairs of adjustments.**

# Maintenance

## Cleaning the Door

In order to prevent damage (rusting) caused by foreign matter adhering to the door, the door should be cleaned at least twice a year. The door should be wiped down with a mild household detergent and rinsed with clear water.

Annually do the following:

## Lubrication

Lubricate all moving parts of the door with light household oil, including:

- Lift cables at the bottom bracket button,
- Bearing of the sheaves,
- Lock hardware where surfaces turn or slide,
- Full length of torsion spring to reduce friction between coils,
- Lubricate steel rollers. **DO NOT** lubricate nylon rollers.

## Check door hardware

1. Check for loose or bent hinges.
   - Tighten loose hinges.
   - Straighten or replace bent hinges.

   **Caution:** To replace bent hinge(s) or broken roller(s):

   A) Door must be locked and in the down position.

   B) No more than 1 hinge is to be removed from the door at any given time.

   C) Under no circumstances should you loosen or remove the bottom bracket without disengaging the spring tension. (Follow instructions on page 10 for removing extension springs.)

2. Check roller for broken wheels, bent shafts, or worn out bearings.

3. Check the door and track supports for loose or missing bolts, screws, etc. and tighten. Be careful not to overtighten.
4. Check the extension cables. Are they running properly in the sheaves? Check for wear of the cable at the bottom bracket button.

5. Check for bent track. If bent, call an authorized professional dealer.

6. Extension spring hardware (see page 7) which includes springs, cables, sheaves, sheave forks, bottom brackets, and containment cables should be adjusted or repaired only when the spring tension is released (the door must be open), and these repairs should be made by a qualified door technician or a mechanically experienced person with proper tools and instructions.

7. If your door has torsion springs (see page 6), the spring assembly and wood anchor pad should only be adjusted or repaired by a professional door technician.

## Studio Series Window Cleaning & Care Instructions (Art Deco, Living Tree & Mission)

**Cleaning:** Clean with a mild solution of a dish-washing detergent and a soft cloth. After cleaning, rinse thoroughly. **DO NOT** use any ammoniated or solvent based cleaners of any kind.

**Care:** Use a good grade of automotive paste wax and buff with a soft cloth. Windows should be cleaned and waxed at least annually or more often based on the atmospheric conditions where installed.

**Caution:** Do not scrape or scratch.

**NOTE:** Minor scratches or scuffs are not considered defects and will not be covered under the window warranty.

# Replacement Parts

Replacement parts are available from an authorized professional dealer or a building supply retailer.

When ordering repair parts, always provide the following: part name, model number, and door width and door height (W x H).

For the location of the authorized professional dealer or a building supply retailer nearest you, please write or call:

Clopay Building Products
Consumer Services Dept.
101 Miller Road
Russia, Ohio 45363

Call Toll Free:1-800-225-6729
Hours of Operation (EST):
Monday – Friday, 8:30 AM - 8 PM
Saturday 8:30 AM - 5 PM.

# Attaching an Automatic Opener

**WARNING**

**To avoid risk of strangulation or personal injury to children, if your door has a pull down rope, you must remove the pull down rope when you install an automatic garage door opener.**

**IMPORTANT:** When installing an automatic garage door opener, make sure to follow the manufacturer's installation and safety instructions carefully. **Do not install the pull down rope when attaching an automatic opener. The lock should be removed or disengaged to prevent damage to the door.** If attaching an operator bracket to the wood anchor pad, make sure the wood anchor pad is free of cracks and splits and is firmly attached to the wall. Always drill pilot holes before attaching lag screws. (See Page 13)

To avoid damage to your door, you must reinforce the top section of the door in order to provide a mounting point for the opener to be attached.

You will need one (1), two (2), or three (3) pieces of 1 1/4" x 1 1/4" minimum punched angle at least 13 gauge or 3/32" thick from your local hardware or building supply store. See chart below for number of pieces, length of pieces, and fasteners required for your specific door. Figures AO-1 – AO-9 show how punched angle is to be affixed to door.

**Do NOT install the bracket supplied with the opener. Failure to reinforce the door, as illustrated, will void your Clopay warranty.**

The operator arm will usually be attached to the vertical angle at roughly the same height as the top roller of the door. Attach the opener arm directly to the punched angle. To prevent the top of the door from bending, the opener rail should be mounted no less than 2" or greater than 5" from the top of the door with the door in the open position (FIG. AO-2)

For attachment of the opener arm to vertical angle iron, use one 3/8" x 3/4" bolt and two 3/8" nuts tightening one nut against the other to prevent the nuts from loosening on the bolt. Do not tighten the nuts against the opener arm (opener arm must be allowed to rotate freely.) (FIG. AO-3)

**NOTE:** An opener bracket kit specifically designed for opener attachment may be purchased as an option (silver galvanized or white powder coated). Instructions are provided with kit.

**Angle Iron & Fasteners Required for Automatic Opener Reinforcement**

| Door Width | Non-Insulated Doors | | Insulated Doors1, 3 | | Angle Iron Required2 |
|---|---|---|---|---|---|
| Up to 9'10" | **6 EA** | 1/4" x 1" Bolts<br>1/4" Lock Washers<br>1/4" Nuts | **4 EA** | 1/4" x 1" Bolts, 1/4" Nuts<br>1/4" Lock Washers<br>1/4" x 3/4" Sheet Metal Screws | (1) 48" piece<br>(1) 21" piece |
| 10'0 to 14'10" | **9 EA** | 1/4" x 1" Bolts<br>1/4" Lock Washers<br>1/4" Nuts | **5 EA**<br>**5 EA**<br>**4 EA** | 1/4" x 1" Bolts, 1/4" Nuts<br>1/4" Lock Washers<br>1/4" x 3/4" Sheet Metal Screws | (2) 48" piece<br>(1) 21" piece |
| 15'0" to 15'10" | **9 EA** | 1/4" x 1" Bolts<br>1/4" Lock Washers<br>1/4" Nuts | **7 EA**<br>**7 EA**<br>**2 EA** | 1/4" x 1" Bolts, 1/4" Nuts<br>1/4" Lock Washers<br>1/4" x 3/4" Sheet Metal Screws | (2) 48" piece<br>(1) 21" piece |
| 16'0" to 18'10" | **2 EA** | 1/4" x 1/2" Bolts<br>1/4" Lock Washers<br>1/4" Nuts | **3 EA** | 1/4" x 3/4" Sheet Metal Screws | (1) 21" piece |
| 19'0" to 20'0" | **9 EA** | 1/4" x 1" Bolts<br>1/4" Lock Washers<br>1/4" Nuts | **7 EA**<br>**7 EA**<br>**2 EA** | 1/4" x 1" Bolts, 1/4" Nuts<br>1/4" Lock Washers<br>1/4" x 3/4" Sheet Metal Screws | (2) 48" piece<br>(1) 21" piece |

**1** On Insulated Doors, the sheet metal screws are to be used instead of nuts and bolts where angle iron attaches to center stile.

**2** Angle iron may have to be trimmed depending on door section height and distance between center stiles.

**3** When insulated steel doors use 1/4" sheet metal screws, each screw location should be predrilled to 5/32".

### Horizontal Angle Iron Attachment

Attach the horizontal punched angle (the longer piece) to the top and /or bottom lip of the door as shown in Figure AO-1. Some doors with struts may not need a horizontal angle, see figure for your specific door on the following page.

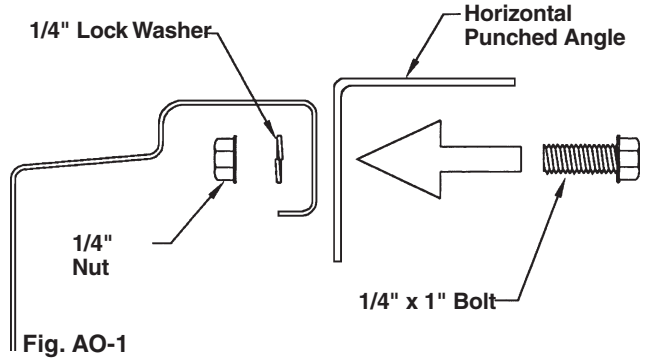


**Fig. AO-1**
**Horizontal Reinforcement Attachment (Top of Door Section - Side View)**

**NOTE:** Horizontal angles and struts are shown cut away for illustration purposes only. **DO NOT** notch these pieces. (FIG. AO-4 to AO-9)

**NOTE:** Doors with 5 or 7 windows should use Fig. AO-6 or AO-8 (depending on door width).

**Insulated Doors Only**
The top of the vertical angle must be notched out so the horizontal angle or strut can be placed over the vertical angle. **The top of the vertical angle MUST overlap the lip of the door panel.** See appropriate figure insert (FIG. AO-4A to AO-9A) for the vertical angle notch-out placement.

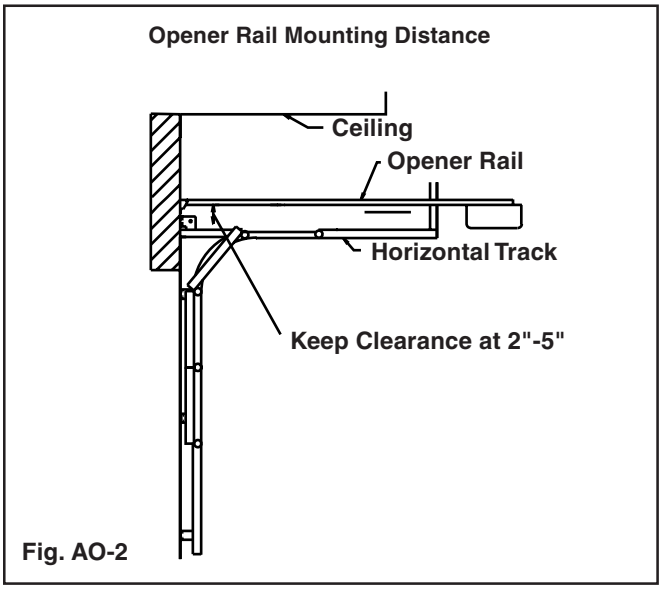

Fig. AO-2

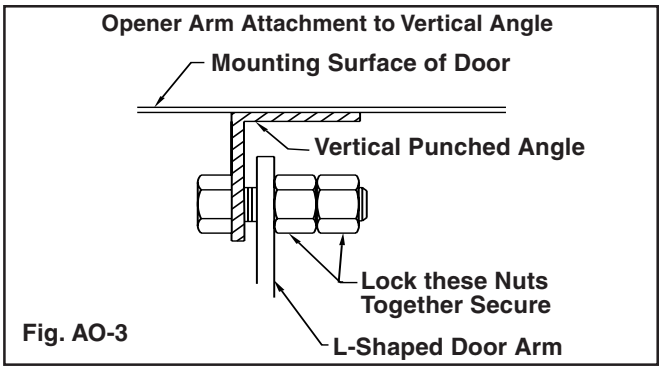

Fig. AO-3

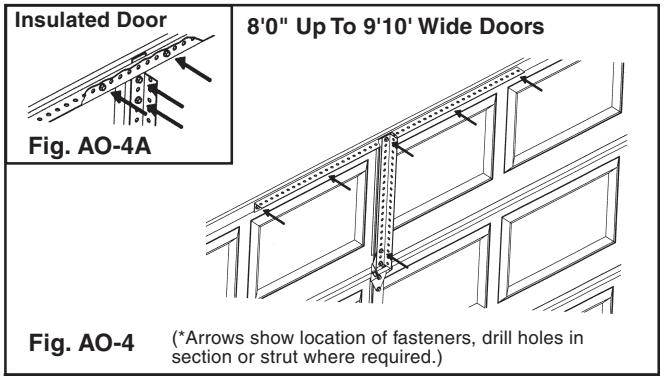

Fig. AO-4A

Fig. AO-4 (*Arrows show location of fasteners, drill holes in section or strut where required.)

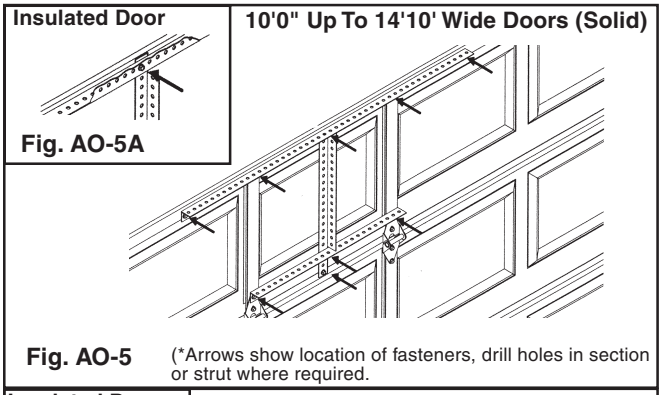

Fig. AO-5A

Fig. AO-5 (*Arrows show location of fasteners, drill holes in section or strut where required.

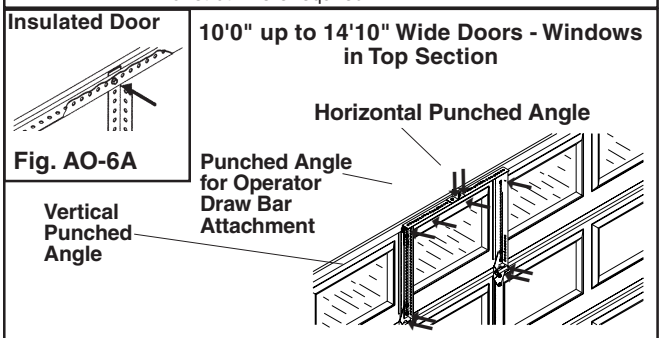

Fig. AO-6A

Fig. AO-6 Punched Angle - One 27" long piece (12' wide doors require one 50" long piece) and two 18" or 21" pieces (measure top section height).

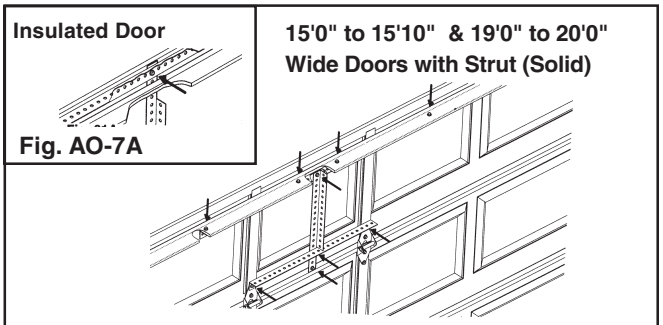

Fig. AO-7A

Fig. AO-7 (*Arrows show location of fasteners, drill holes in section or strut where required.

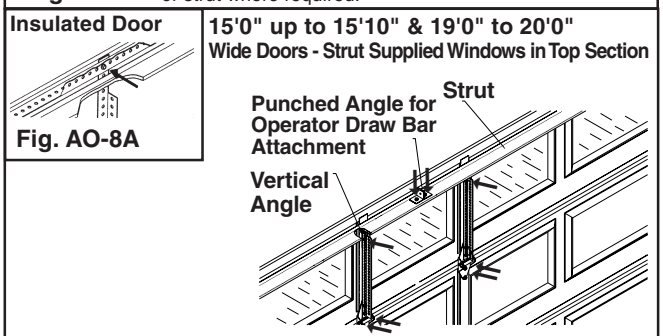

Fig. AO-8A

Fig. AO-8 Punched Angle - Two 18" or 21" long pieces (measure top section height). *Strut supplied.

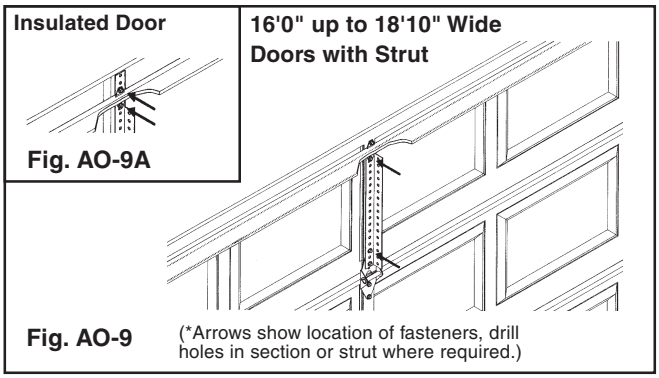

Fig. AO-9A

Fig. AO-9 (*Arrows show location of fasteners, drill holes in section or strut where required.)

# Painting and Windows

## PAINTING

**Cleaning:** Before painting your door, it must be free of dirt, oils, chalk, waxes and mildew. The prepainted surfaces can be cleaned of dirt, oils, chalk and mildew with a diluted solution of trisodium phosphate. Trisodium phosphate is available over the counter at most stores under the name SOILAX®, in many laundry detergents without fabric softener additives, and in some general purpose cleaners. Check the label for trisodium phosphate content. The recommended concentration is ⅓ cup of powder to 1½ to 2 gallons of water. After washing the door, always rinse well with clear water and allow to dry.

If the door has ever been waxed, the wax must be removed before painting. Doors are not waxed during the manufacturing process. This can be accomplished by wiping the door surface with a rag saturated with Xylene (Xylol), available at most paint or hardware stores. Wiping should be done at moderate pressure and Xylene must not be allowed to sit on the door for an extended time. Damage to your door's paint system can occur if overexposed to this or other solvents.
**Caution:** Safety instructions on the solvent's container must be followed. After de-waxing the door, clean with trisodium phosphate, as stated previously.

**NOTE:** Sanding could remove rust-inhibiting compounds, therefore, sanding should be done only to damaged areas where bare metal has been exposed. Refer to the **"Repair"** section of these instructions.

**Repair:** Should your door's paint finish become damaged, exposing the bare metal, it will become necessary to repair this area to prevent rust from forming. The damaged area should be lightly sanded with a medium to fine sandpaper making sure to remove all visible red and white rust. Wipe this area with a dry, clean rag. Coat the sanded area with a high quality, rust inhibiting, zinc enriched primer. This type of primer can be found at most paint or hardware stores, and should be labeled for covering bare and galvanized steel. Once the primer is applied, wait the time specified on the primer's instructions before you finish painting your door.

**Paint:** Your steel garage door can be painted with a high-quality latex (flat, satin, or semigloss) exterior grade paint. Since all paints are not created equal, the following test needs to be performed: paint should be applied on a small area of the door (following the instructions on the paint container), allowed to dry, and evaluated prior to painting the entire door. Paint defects to look for are blistering and peeling. An additional test is to apply a strip of masking tape over the painted area and peel back, checking to see that the paint adheres to the door and not to the tape.

After satisfactorily testing a paint, follow the directions on the container and apply to the door. Be sure to allow adequate drying time should you wish to apply a second coat.

Window frames & inserts can be painted with a high quality latex paint. The plastic should first be lightly sanded to remove any surface gloss.

**NOTE:** Do not apply paint when door surface temperature is different from manufacturer's suggested temperature range for application.

## SNAP-IN DECORATIVE INSERT

**Removal and Replacement**:
**NOTE:** DO NOT REMOVE SCREWS from the window frame. Decorative inserts are designed to snap-in and out of the window frame.

Some doors with windows have a decorative insert attached behind the window. They may be moved to the outside of the glass, or can be removed for cleaning or painting purposes.
1) Remove the four tabs of the insert from under the edge of the inside window frame. There is one tab on each side and one on the top and bottom of the insert.
2) The insert can be firmly pulled out of the window.
3) Replacing the insert is the reversal of the process described for removal. The four tabs must be pressed under the lip in the window frame.
4) If preferred, the insert can be snapped into the frame on the outside of the glass.

## WINDOWS

**WARNING**

**To avoid injury, use extreme caution in handling glass window pane. When the frame is removed, the exposed steel edge of the door may be sharp. Avoid contact with the steel edges.**

**Glass Replacement:** If your door is equipped with windows and the glass should need replacement, follow the steps below:
1) With someone holding the outside frame, remove the ten screws from the inside window frame.
2) Pull the inside frame out of the door.
3) **Carefully** remove the broken or old glass.
4) Insert the new (replacement) glass. The glass size should be 11" by 18½".
5) With someone holding the outside frame, reinsert the screws into the inside frame, trapping the glass.

# LOW HEADROOM OPTIONS

| SPRING | OPTION | REDUCES HEADROOM REQUIRED TO: | How Can I Get This Option? |
|---|---|---|---|
| Extension | Double Track Low Headroom | 4½ inches | Order low headroom track. |
| Extension | Low Headroom Conversion Kit | 4½ inches | Available at most retail stores. |
| Extension | Quick Turn Bracket* | 8" on 12" Radius Track | Order bracket & see below for instructions. |
| Torsion | Double Track Low Headroom Front Mount | 9½ inches | Available from & should be installed by professional installer only. |
| Torsion | Low Headroom Rear Mount | 4½ inches | Available from & should be installed by professional installer only. |

## Double Track Low Headroom

(Reduces headroom required to 4½" on extension springs, 9½" on front mount torsion springs) Instructions are provided with the track.

## Low Headroom Conversion Kit-— Extension Springs.

(Reduces headroom required to 4½")

This option is designed to modify the standard track. Instructions are provided in the kit.

## Quick Turn Bracket*

(Reduces headroom requirement to 8" on 12" radius track. Quick turn bracket cannot be used in conjunction with any other low headroom option.) This is used in place of the existing top roller.

1. Place two rollers in the tubes as shown (FIG. LHR-1). On some doors it will be necessary to try various roller positions to achieve the proper hinge location on the door.
2. Position the rollers and the bracket in the door track. Allow the hinged end of the bracket to come against the door. Apply sufficient pressure to be sure that the top of the door is closed tightly against the header.
3. Attach to the top of the door in the same manner as the original top roller bracket.
4. It may be necessary to relocate holes.

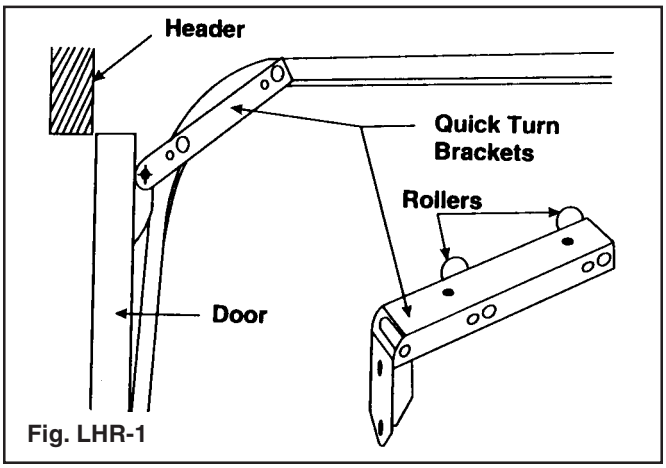

Fig. LHR-1

*Quick turn brackets cannot be used in conjunction with Windcode™ doors that require a strut mounted on the top of the top section. Double track low headroom or low headroom conversion kit hardware used instead.

# Lock Installation
# Slip sheet

Vertical tracks may appear to have no lock holes. On these tracks examine the track for this note. STRIKE SLUG FROM OTHER SIDE. Follow instructions below.

**#1 Snap Latch**
If installing the #1 snap latch lock discard these instructions.

**#2 Slide Bolt**
Install door per installation manual supplied. Determine position of slide bolt on #2 section. Remove the slug by striking with a hammer from the outside of the track. This may be accomplished after the balancing system is installed and the door is raised to the open position.

**#3Lock**
Install door per installation manual supplied. After the lock bars have been installed, mark the closest slug on each side of the vertical track. These will be the appropriate slugs to remove. Remove the slugs by striking with a hammer from the outside of the track. This may be accomplished after the balancing system is installed and the door is raised to the open position.

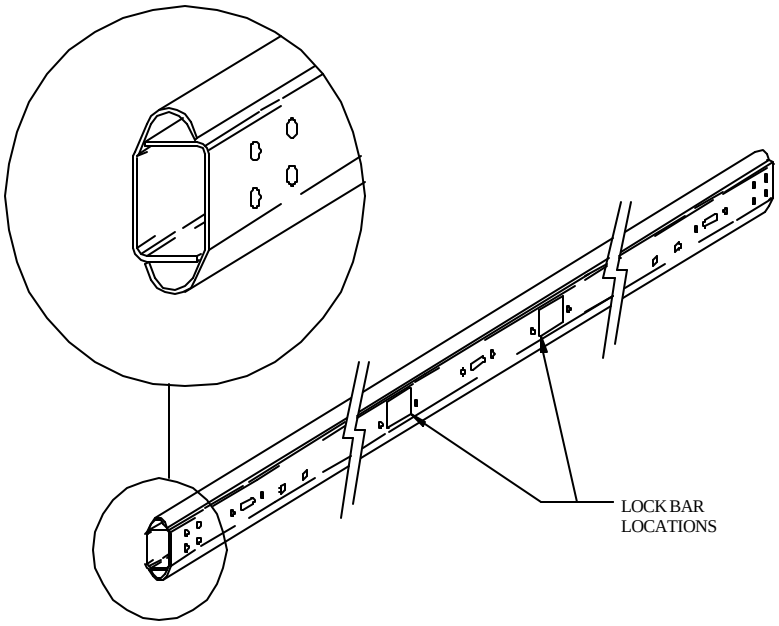

# SUPPLEMENTAL INSTRUCTIONS

## LIFT HANDLE ATTACHMENT

**Lift Handle Preparation**
If you have a 2" thick door, no modifications to the lift handle are necessary. If you have a 1-3/8" thick door, cut the stems on the lift handle along the ridge line using a hacksaw (Fig. 1A).

**Bottom Section**
From the front of the door section, drill (2) ½" holes through the section according to the Bottom Section Hole Pattern (Fig. 2). A T-Square may be used to mark the holes to ensure that they are vertically in line. If your door has an outside keyed lock, the hole pattern should be drilled on the bottom section directly below the lock. If your door does not have an outside keyed lock, the hole pattern should be drilled directly below the hinge closest to the horizontal center of the door.Install the lift handle & inside step plate assembly using (2) #14 x 5/8 sheet metal screws (Fig. 1).

**IMPORTANT: Use a wrench or a socket to drive screws. Do not over tighten. Do not use an electric drill or driver.**

**2nd Section (Not Required on Doors with Outside Keyed Lock)**
From the front of the door section, drill (2) ½" holes through the section according to the 2nd Section Hole Pattern (Fig. 2). A T-Square may be used to mark the holes to ensure that they are vertically in line. The hole pattern should be drilled directly above the hinge closest to the horizontal center of the door. Install the lift handle / inside step plate assembly using (2) #14 x 5/8 sheet metal screws (Fig. 1).

**Painting Lift Handles**
Plastic Lift Handles can be painted using a quality spray on or brushed on enamel paint.

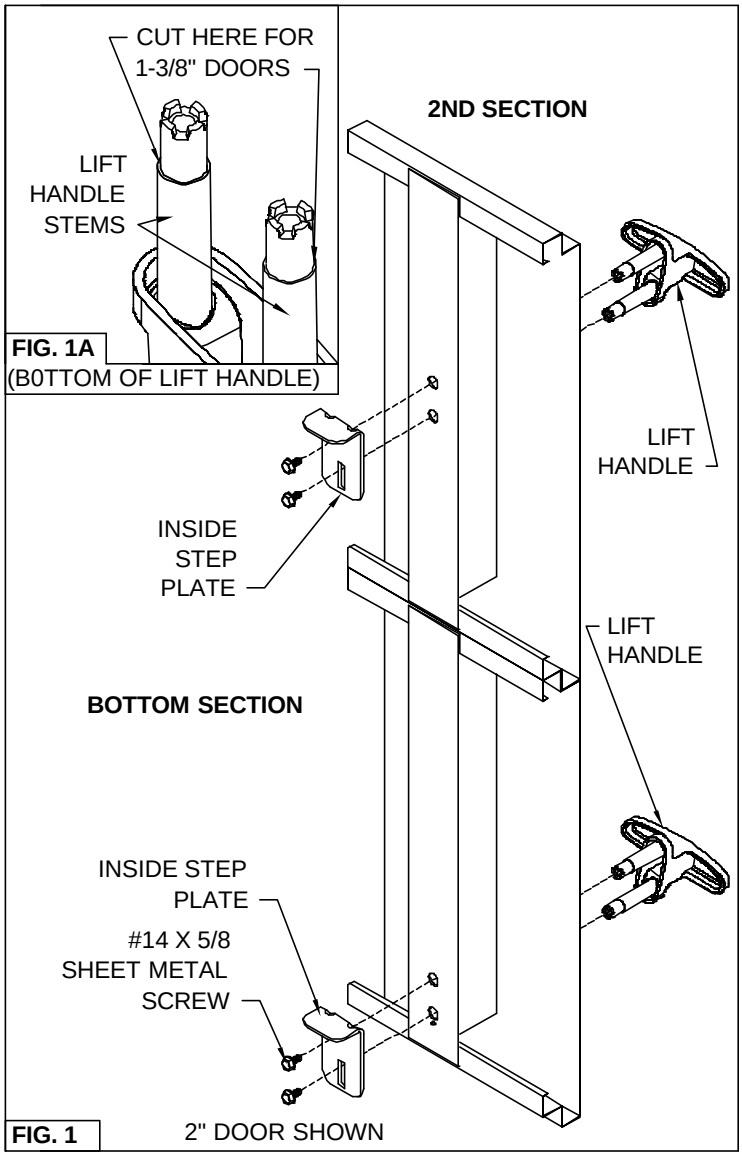


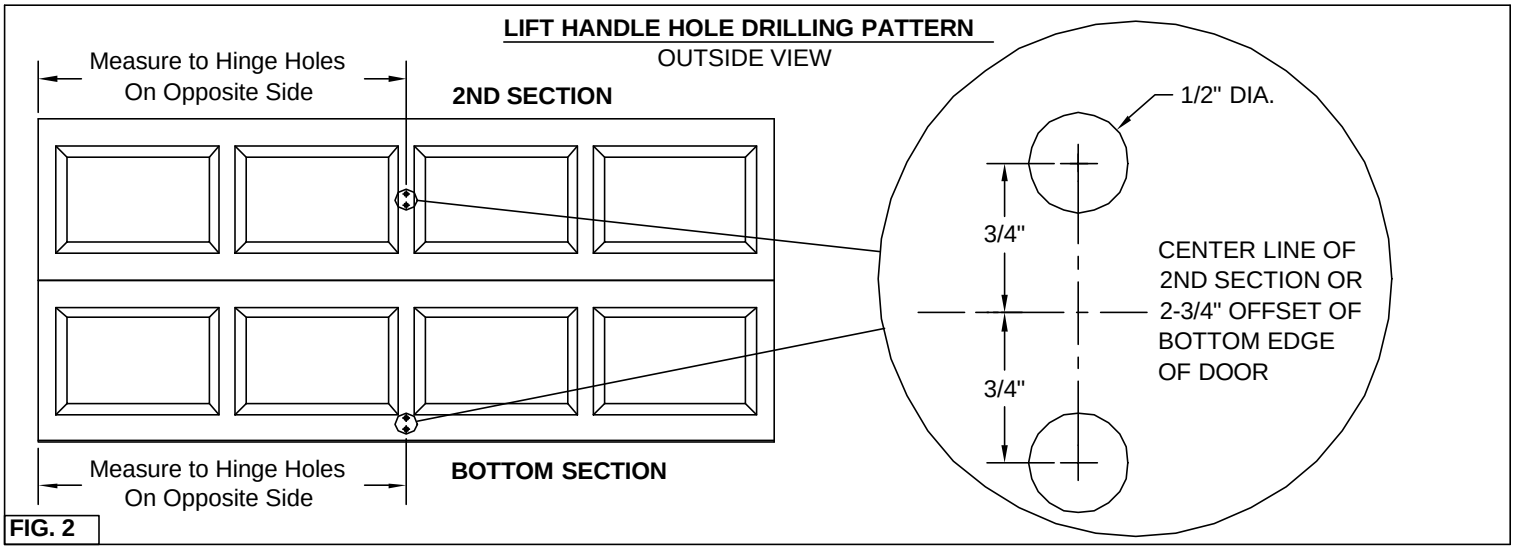

# INSTALLATION & MAINTENANCE

## Insulated Steel Residential Garage Door Instructions

Model: _____ Serial No. _____

(Provided on label on interior door surface)

Size: _____ Please complete & mail warranty registration card on page 8.

**Homeowners Should Retain This Booklet For Future Reference**

Clopay® BUILDING PRODUCTS
A Griffon Company

**CONSUMER HOTLINE • 1-800-2CLOPAY • 1-800-225-6729**

Hours of Operation (EST): Mon. – Fri., 8:30 AM - 8 PM; Sat. 8:30 AM - 5 PM.

**Packer#**

*Dear Clopay Customer,*

*Thank you for purchasing a Clopay Garage Door. Your new Clopay Garage Door was built to meet the highest industry standard and to provide you with years of dependable performance.*

*This manual contains important installation and maintenance information. Carefully follow the instructions and maintenance recommendations. Please keep this manual for future reference.*

*If you should require any assistance or additional information, please call our Clopay Consumer Services Hotline at 1-800-2CLOPAY (1-800-225-6729). One of our representatives will be happy to assist you.*

*Remember to take a moment to complete all questions on your Warranty Registration Card (found on page 8) and return it to Clopay.*

*Thank you again for choosing Clopay!*

*Sincerely,*
*Clopay Building Products Company*

Clopay®
America's Favorite Garage Doors™

# Table of Contents


***Introduction and Opening Preparation***

Safety Information ..... P-3
Things to Know Before You Begin ..... P-5
Torsion Spring Door Illustration ..... P-6
Extension Spring Door Illustration ..... P-7
Hardware Components ..... P-8
Removing the Existing Door ..... P-11
Check Headroom/Backroom/Sideroom ..... P-13
Preparing the Opening ..... P-14

***Installing the New Door***

Preparing and Installing Door Sections ..... P-15
Lock Installation ..... P-18
Assembling and Installing the Track ..... P-21
Assembling and Installing EZ-Set Spring™ ..... P-26
Assembling and Installing Extension Springs ..... P-29
Torsion Spring Assembly ..... P-33

***Maintenance/Adjustments/Options***

Checking and Adjusting the Door ..... P-35
Maintenance ..... P-36
Replacement Parts ..... P-36
Attaching an Automatic Opener ..... P-37
Painting and Windows ..... P-39
Low Headroom Options ..... P-40

# SAFETY INFORMATION

## I M P O R T A N T !

**To Protect Yourself From Injury You Must Carefully Read The Following Safety Information And Warnings Before You Install Or Use Your New Garage Door**

- You can install your new garage door yourself IF…
  1. you have help (it may weigh up to 400 lbs.);
  2. you have the right tools and reasonable mechanical aptitude or experience; and
  3. you follow these instructions very carefully.

  In particular, please note that:

- Garage doors use springs to balance them. Generally, there are three types of springs used — EZ-Set Spring™, extension springs and torsion springs. Please look at the drawings on pages 6 & 7 to see which springs your old door has. **If your old door uses torsion springs, do not attempt to remove the door or the springs yourself.** Have a qualified door repair service remove them. Attempting to remove a torsion spring assembly without proper training or tools may result in an uncontrolled release of spring forces which can cause serious or fatal injury.

- The brackets at the bottom corners of your garage door are under great tension. **Do not attempt to loosen any bracket fasteners** except when and as directed in detail in the following instructions. Otherwise, the bracket could spring out with dangerous force.

- In removing a garage door which has extension springs, follow the instructions carefully, including the use of “C” clamps or locking pliers on both sides of the door in order to keep the door from moving once the springs are removed.

- When installing a door with torsion springs, always use solid steel ½" x 18" winding bars. Winding bars are available from many professional door installers. **The use of screwdrivers or any substitutes for winding bars will risk severe injury.** See page 33 for further safety instructions regarding winding bars.

- Keep hands and fingers clear of section joints, track, and other door parts when the door is opening and closing to avoid injury. The lift handles are located for safe operation as well as easy use.

- **EZ-Set Spring™ and extension spring doors must never be operated without a properly installed spring containment cable.**

- Bolts must be installed at the rear end of horizontal tracks. These act to stop the rollers and keep the door from rolling off the back of the track.

- **Only the track specified and supplied with the door should be used.**

- Express warranties apply only to doors installed using original, factory-supplied sections, parts, and hardware installed in strict accordance with these instructions.

# SAFETY INFORMATION

## I M P O R T A N T !

**To Protect Yourself From Injury You Must Carefully Read The Following Safety Information And Warnings Before You Install Or Use Your New Garage Door**

- Track installations must use sway braces on the rear track hangers to prevent sideways movement. If the tracks are not firmly stabilized they might spread, allowing the door to fall and cause severe injury and damage.

- If your new door has a torsion spring (except EZ-Set Torsion™), the center torsion spring assembly uses a wooden pad that **must be of good quality and firmly attached to the wall.** Four ⅜" x 3" lag screws should be used to attach wood structure. The wood needs to be made of a Grade 2 or better Southern Yellow Pine (also known as Southern Pine or Yellow Pine.) **Do NOT** use wood labeled as Spruce-Pine-Fir (or SPF.). Four ⅜" masonry anchors can be used on concrete or block walls. If the wood splits once the torsion spring is in place, it should be replaced by a professional installer. **Do not try to remove or repair a torsion spring assembly or red fasteners once the spring is wound.**

- Springs, cables, and bottom fixtures are under strong spring tension. **Do not attempt to loosen any fasteners on these components.** You could suddenly release spring forces and risk severe injury.

- If the garage door and/or any of the supporting track are damaged, operating the door could be hazardous. Call an authorized representative of the manufacturer or professional door repair service promptly.

- **Do not permit children to play beneath or with any garage door or electric operating controls.**

- If repairs are ever required to your door, safety and trouble-free operation can be best assured by using original replacement parts.

- Once you have completed the installation of your new garage door, please be sure that your garage complies with all applicable ventilation requirements before you enclose any vehicles in the garage. Good ventilation avoids fire and health hazards caused by fumes accumulating within a well-sealed garage.

- Clopay Building Products Company disclaims all liability for any installation which is not in compliance with applicable state or county building codes.

- Doors equipped with automatic door operators can cause serious injury or death if not properly adjusted and operated. To insure safe of these doors:
  a) test the sensitivity of the operator's safety reverse mechanism monthly;
  b) if your door has a pull down rope, you must remove the pull down rope.
  c) make sure the door remains unlocked;
  d) do not allow children to play with the controls.

# Things to Know Before You Begin

Read the instructions completely before starting the installation of the door. Becoming familiar with the components before assembling the door will reduce the installation time.

**In the interest of safety this symbol means WARNING or CAUTION. Personal injury and/or property damage may occur unless instructions are followed carefully.**

- Allow enough time to do the work; removing an existing door will take approximately 1-3 hours.
- An assistant may be required for lifting the unsprung door. It can weigh from 175 to 400 pounds.
- A typical installation takes between 9 and 12 hours to complete.
- Keep in mind when planning the installation that the garage will be open and unsecured when disassembling the old and assembling the new door.
- If the garage door is the only opening in the structure make sure everything you need is inside. You will have no way of leaving the garage until the track is assembled and installed. This will take approximately 5 hours.
- To avoid damage to the door, you must reinforce the top section of the door in order to provide a strengthened mounting point for attachment of an automatic opener (see page 37).
- Low Headroom doors require special instructions found on page 40. Purchase of additional hardware may be required. Check headroom requirements in the chart on page 13 before beginning.
- You must use the track and hardware provided with the new door for proper and safe operation.
- To avoid installation problems which could result in personal injury or property damage, never reuse old track.
- During conditions of extreme temperatures and/or intense sunshine, dark colored doors (such as deep tones of brown, green, blue, etc. ) *may* experience a large temperature differential between the inside and outside surfaces. While some thermal bowing is normal, on those *extremely rare* occasions that this difference in inside and outside temperature reaches 100°F, an additional strut on the second section may be required to help control excessive thermal bowing. This precaution applies primarily to dark colored double doors.
- Doors installed in high windload regions (Florida and other hurricane prone areas) may require additional reinforcement beyond what is detailed in these instructions. Please refer to supplemental instructions for these areas.

# Tools Needed

- “C” Clamps or Locking Pliers
- Hammer
- Winding Bars (Torsion Only)
- Screwdriver
- Tape Measure
- Level
- Socket wrench kit
- Pliers
- Drill (reversible recommended) and $^1/_4$", $^3/_{16}$", & $^3/_8$" bits
- Step ladder
- Saw horses or other supports for placing section on while assembling

# Additional Material Required

- Light household oil
- Punched Angle — For rear track hangers $1^1/_4$" x $1^1/_4$" minimum angle at least 13 ga. or $^3/_{32}$" thick (this is not provided due to ceiling height differences)
- Six $^5/_{16}$" x $1^1/_2$" lag screws for rear track hangers
- Eight $^3/_8$" x 1" bolts and nuts for rear track hangers
- Ten 16d $3^1/_2$" nails
- Four $^3/_8$" x 4" lag screws — used to mount center pad on torsion installation
- Stop molding
- For automatic opener
  - Punched angle $1^1/_4$" x $1^1/_4$" minimum (angle at least 13 ga. or $^3/_{32}$" thick) - See page 37 for more information.
  - See page 37 for the bolts or screws needed.

# Garage Door with Torsion Springs

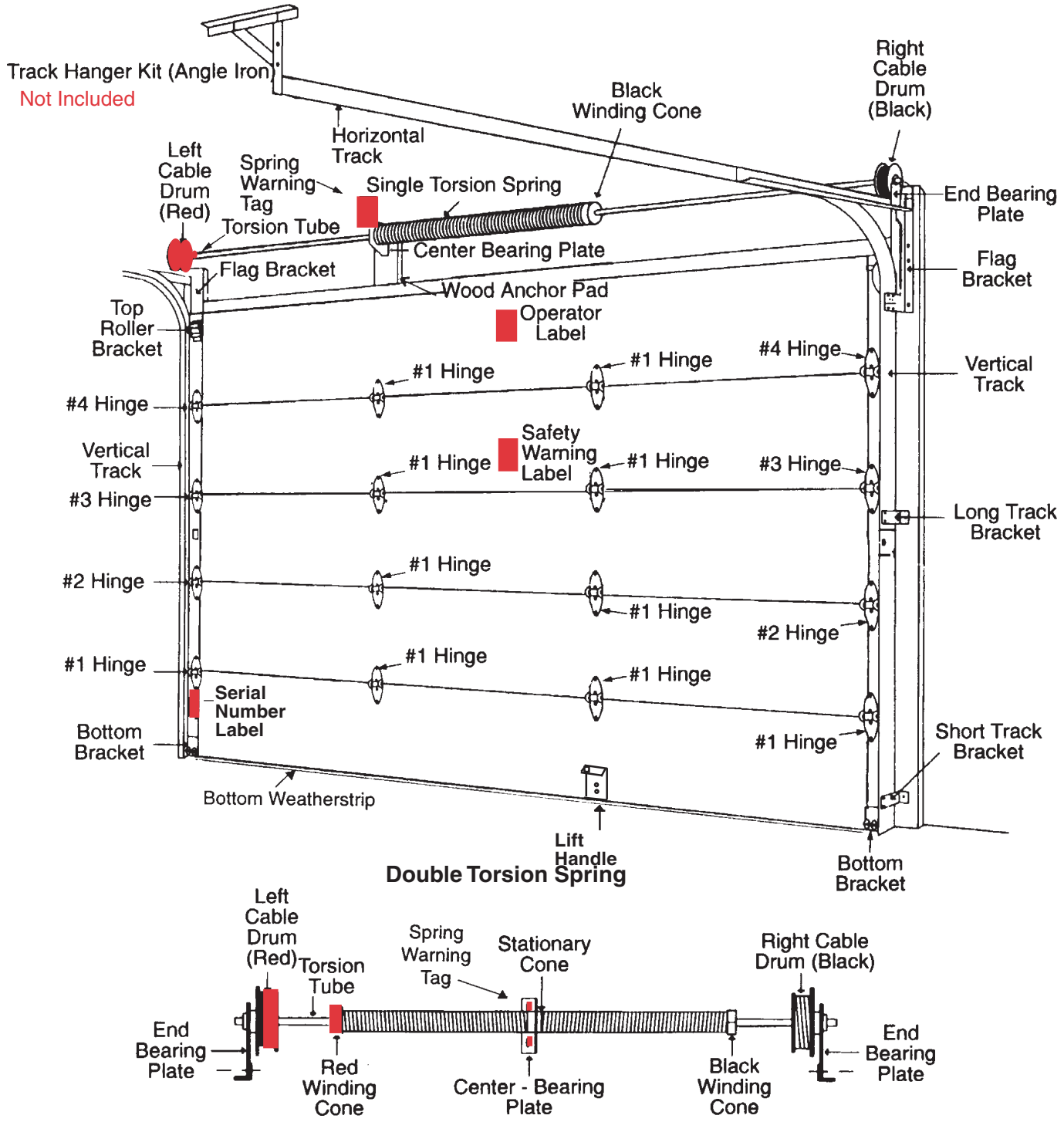


**NOTE:** Instructions refer to right and left hand parts as though facing the door opening from inside of the garage.

# Garage Door with Extension Springs

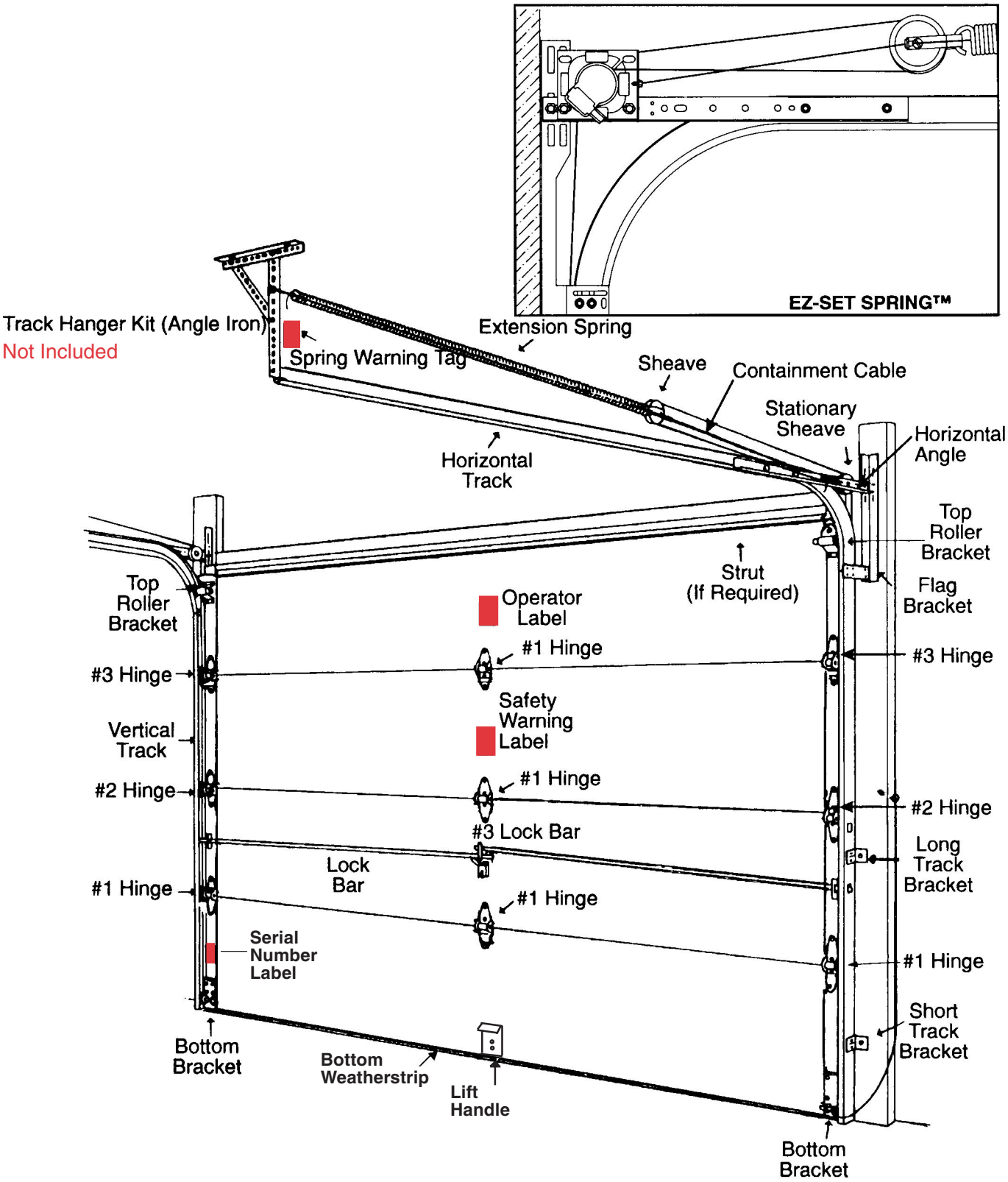


**NOTE:** The opposing page illustration and the above illustration represent a composite of many of the features found on a variety of garage doors. While not representative of any one door, it provides a handy reference for the location of specific components and hardware.

# Hardware Components

All doors will receive (2) of these items:

| | | |
|---|---|---|
| TRACK BRACKET (Longer) | 3/8" – 16 X 3/4" CARRIAGE BOLT | 3/8" WASHER |
| TRACK BRACKET (Shorter) | TOP ROLLER BRACKET | CURVED HORIZONTAL TRACK |
| #2 HINGE | BOTTOM BRACKET (1) PAIR | VERTICAL TRACK |
| #3 HINGE | HORIZONTAL ANGLE | CABLE ASSEMBLY |
| | FLAG BRACKET (1) PAIR | |

(While not representative of any one model, the quantities below can be used as a guide. In some instances, extra screws/bolts are provided in the event of strip out or loss of parts.)

| DESCRIPTION | DOOR SIZE | QTY. |
|---|---|---|
| 3/8" FLANGE NUT | Single Car Doors 8' - 9' W X 7' H | 2 |
| | Double Car Doors 16' W X 7' H | 2 |
| 1/4" FLANGE NUT | Single Car Doors 8' - 9' W X 7' H | 18 |
| | Double Car Doors 16' W X 7' H | 24 |
| 14 X 5/8" HEX HEAD SHEET METAL SCREW | Single Car Doors 8' - 9' W X 7' H | 56 |
| | Double Car Doors 16' W X 7' H | 90 |
| STRUTS[1] | Single Car Doors 8' - 9' W X 7' H | 0 |
| | Double Car Doors 16' W X 7' H | 1 or 3 |
| STRUT CLIPS[2] | Single Car Doors 8' - 9' W X 7' H | 0 |
| | Double Car Doors 16' W X 7' H | 2 |
| 1/4" – 20 X 1 7/8" CARRIAGE BOLT | Single Car Doors 8' - 9' W X 7' H | 2 |
| | Double Car Doors 16' W X 7' H | 10/ strut |

| DESCRIPTION | DOOR SIZE | QTY. |
|---|---|---|
| ROLLERS | Single Car Doors 8' - 9' W X 7' H | 10 |
| | Double Car Doors 16' W X 7' H | 10 |
| #1 HINGE | Single Car Doors 8' - 9' W X 7' H | 5 |
| | Double Car Doors 16' W X 7' H | 11 |
| LIFT HANDLES | Single Car Doors 8' - 9' W X 7' H | 1 or 2 |
| | Double Car Doors 16' W X 7' H | 1 or 2 |
| 1/4" X 5/8" TRACK BOLT | Single Car Doors 8' - 9' W X 7' H | 18 |
| | Double Car Doors 16' W X 7' H | 24 |
| 5/16" X 1 5/8" LAG SCREW | Single Car Doors 8' - 9' W X 7' H | 10 |
| | Double Car Doors 16' W X 7' H | 10 |
| 3/8" SPACER | Single Car Doors 8' - 9' W X 7' H | 2 |
| | Double Car Doors 16' W X 7' H | 2 |

[1]More struts may be required in high windload areas
[2]Self-tapping screws replace strut clips on high windload doors

# Additional Hardware Components

## For EZ-Set Extension Spring™ Doors Only

**MINIMUM SIDEROOM FOR INSTALLATION**

**5 1/2" of sideroom is required for installation of the EZ-Set Extension Spring™ system. (Standard extension spring installation requires 3 3/4" of sideroom.)**

| DESCRIPTION | DOOR SIZE | QTY. |
|---|---|---|
| SPRING SYSTEM HOUSING (includes lift cable) | Single Car Doors 8' - 9' W X 7' H | 2 |
| | Double Car Doors 16' W X 7' H | 2 |
| HOUSING BRACKET | Single Car Doors 8' - 9' W X 7' H | 2 |
| | Double Car Doors 16' W X 7' H | 2 |
| EXTENSION SPRING | Single Car Doors 8' - 9' W X 7' H | 2 |
| | Double Car Doors 16' W X 7' H | 2 |
| 5/16" EYE BOLT | Single Car Doors 8' - 9' W X 7' H | 2 |
| | Double Car Doors 16' W X 7' H | 2 |
| 5/16" FLANGE NUT | Single Car Doors 8' - 9' W X 7' H | 4 |
| | Double Car Doors 16' W X 7' H | 4 |
| SHEAVE | Single Car Doors 8' - 9' W X 7' H | 2 |
| | Double Car Doors 16' W X 7' H | 2 |
| SHEAVE FORK | Single Car Doors 8' - 9' W X 7' H | 2 |
| | Double Car Doors 16' W X 7' H | 2 |
| 3/8 " X 1 1/4" HEX HEAD BOLT | Single Car Doors 8' - 9' W X 7' H | 2 |
| | Double Car Doors 16' W X 7' H | 2 |

| DESCRIPTION | DOOR SIZE | QTY. |
|---|---|---|
| BLACK BUSHING | Single Car Doors 8' - 9' W X 7' H | 2 |
| | Double Car Doors 16' W X 7' H | 2 |
| 3/8" FLANGE NUT | Single Car Doors 8' - 9' W X 7' H | 8 |
| | Double Car Doors 16' W X 7' H | 8 |
| SAFETY CONTAINMENT CABLE | Single Car Doors 8' - 9' W X 7' H | 2 |
| | Double Car Doors 16' W X 7' H | 2 |
| 3/8" X 3/4" HEX HEAD BOLT | Single Car Doors 8' - 9' W X 7' H | 2 |
| | Double Car Doors 16' W X 7' H | 2 |
| 1/4" FLANGE NUT (double track low headroom doors only) | Single Car Doors 8' - 9' W X 7' H | 2 |
| | Double Car Doors 16' W X 7' H | 2 |
| #14 X 5/8" SHEET METAL SCREW | Single Car Doors 8' - 9' W X 7' H | 2 |
| | Double Car Doors 16' W X 7' H | 2 |
| 3/8" X 3/4" HEX HEAD BOLT | Single Car Doors 8' - 9' W X 7' H | 4 |
| | Double Car Doors 16' W X 7' H | 4 |

# Additional Hardware Components

## For Torsion Spring Doors Only

| DESCRIPTION | DOOR SIZE | QTY. |
|---|---|---|
| TORSION SPRING | Single Car Doors 8' - 9' W X 7' H | 1 |
| | Double Car Doors 16' W X 7' H | 1 or 2 |
| END BEARING PLATE | Single Car Doors 8' - 9' W X 7' H | 2 |
| | Double Car Doors 16' W X 7' H | 2 |
| TORSION TUBE | Single Car Doors 8' - 9' W X 7' H | 1 |
| | Double Car Doors 16' W X 7' H | 1 |
| CENTER BEARING PLATE | Single Car Doors 8' - 9' W X 7' H | 1 |
| | Double Car Doors 16' W X 7' H | 1 |
| CABLE DRUMS | Single Car Doors 8' - 9' W X 7' H | 2 |
| | Double Car Doors 16' W X 7' H | 2 |
| NYLON CENTER BEARING | Single Car Doors 8' - 9' W X 7' H | 1 |
| | Double Car Doors 16' W X 7' H | 1 |
| $^5/_{16}$" X $1^5/_8$" LAG SCREW | Single Car Doors 8' - 9' W X 7' H | 2 |
| | Double Car Doors 16' W X 7' H | 2 |
| $^5/_{16}$" X $1^5/_8$" LAG SCREW (RED HEAD) | Single Car Doors 8' - 9' W X 7' H | 2 |
| | Double Car Doors 16' W X 7' H | 2 |
| $^3/_8$" X $^3/_4$" HEX HEAD BOLT | Single Car Doors 8' - 9' W X 7' H | 4 |
| | Double Car Doors 16' W X 7' H | 4 |
| $^3/_8$" FLANGE NUT | Single Car Doors 8' - 9' W X 7' H | 6 |
| | Double Car Doors 16' W X 7' H | 6 |
| $^3/_8$"-16 X $^3/_4$" CARRIAGE BOLT | Single Car Doors 8' - 9' W X 7' H | 2 |
| | Double Car Doors 16' W X 7' H | 2 |

## For Extension Spring Doors Only

| DESCRIPTION | DOOR SIZE | QTY. |
|---|---|---|
| EXTENSION SPRING | Single Car Doors 8' - 9' W X 7' H | 2 |
| | Double Car Doors 16' W X 7' H | 2 or 4 |
| SHEAVE | Single Car Doors 8' - 9' W X 7' H | 4 |
| | Double Car Doors 16' W X 7' H | 4 |
| SHEAVE FORK | Single Car Doors 8' - 9' W X 7' H | 2 |
| | Double Car Doors 16' W X 7' H | 2 or 6 |
| $^3/_8$" X $1^1/_4$" SHEAVE BOLT | Single Car Doors 8' - 9' W X 7' H | 4 |
| | Double Car Doors 16' W X 7' H | 4 |
| $^5/_{16}$" EYEBOLT | Single Car Doors 8' - 9' W X 7' H | 2 |
| | Double Car Doors 16' W X 7' H | 2 or 4 |
| SAFETY SPRING CONTAINMENT KIT | Single Car Doors 8' - 9' W X 7' H | 2 |
| | Double Car Doors 16' W X 7' H | 2 or 4 |
| (3) HOLE ADJUSTMENT KIT | Single Car Doors 8' - 9' W X 7' H | 2 |
| | Double Car Doors 16' W X 7' H | 2 |
| YOKE PLATE | Single Car Doors 8' - 9' W X 7' H | 0 |
| | Double Car Doors 16' W X 7' H | 0 or 2 |
| $^5/_{16}$" YOKE BOLT | Single Car Doors 8' - 9' W X 7' H | 0 |
| | Double Car Doors 16' W X 7' H | 0 or 4 |
| S-HOOK | Single Car Doors 8' - 9' W X 7' H | 2 |
| | Double Car Doors 16' W X 7' H | 2 |
| BLACK BUSHING | Single Car Doors 8' - 9' W X 7' H | 2 |
| | Double Car Doors 16' W X 7' H | 2 or 4 |
| $^5/_{16}$" FLANGE NUT | Single Car Doors 8' - 9' W X 7' H | 4 |
| | Double Car Doors 16' W X 7' H | 4 or 8 |
| $^3/_8$" FLANGE NUT | Single Car Doors 8' - 9' W X 7' H | 4 |
| | Double Car Doors 16' W X 7' H | 4 |

# Removing the Existing Door

**WARNING**

Garage doors use springs to balance the door weight. Generally there are three types of springs used — EZ-Set Spring™, extension springs and torsion springs. Please look at the drawings on pages 6 & 7 to see which springs your old door has installed. **If your present door uses torsion springs, do not attempt to remove the door or the springs yourself.** They should be removed by a qualified door service professional. Attempting to remove a torsion spring assembly without proper training and tools may result in an uncontrolled release of spring forces which can cause serious or fatal injury.

EZ-Set Spring™ (inset) and extension springs are shown installed on a sectional garage door in the illustration on Page 7. Instructions for removing these types of springs are provided below.

**WARNING**

**Serious injury could result if spring tension has not been released before other work begins.**

## Removing Extension Springs

**Step 1a:** Raise the door to the full open position. Place "C" clamps or locking pliers tightly on both sides of the track under the door so the door is held securely in place. With the door fully open, most spring tension has been removed. (FIG. 1) **Do not attempt to remove or adjust extension springs with door in the down position. Use "C" clamps to keep the door from moving or falling once the springs are removed.**

**Step 1b:** Detach the cable at both ends. Disassemble and remove the springs and cable completely from the door. (FIG. 2)

**Step 1c:** Remove the "C" clamps from the track and carefully close the door.

**WARNING**

**Use two or more helpers to assist you in lowering the door.**

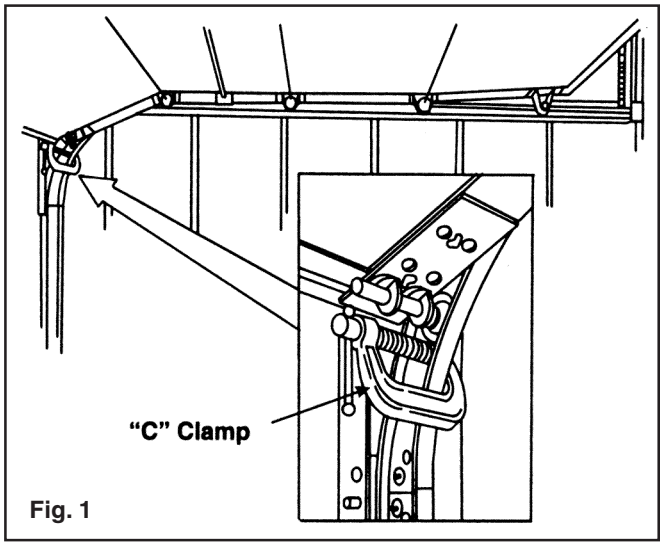


Fig. 1

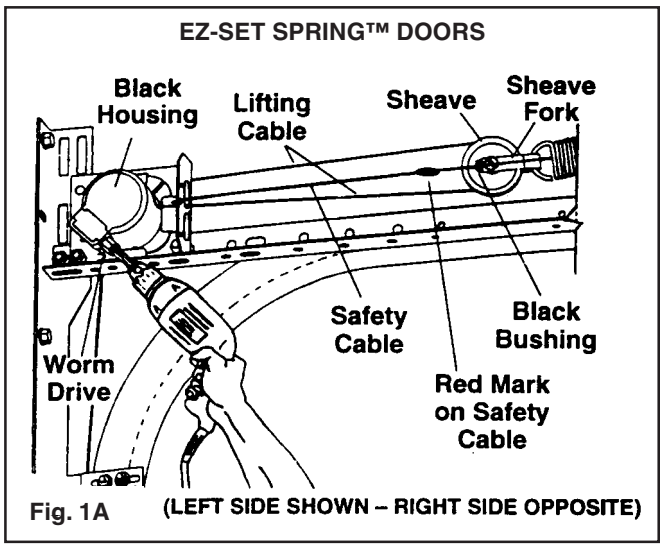


Fig. 1A

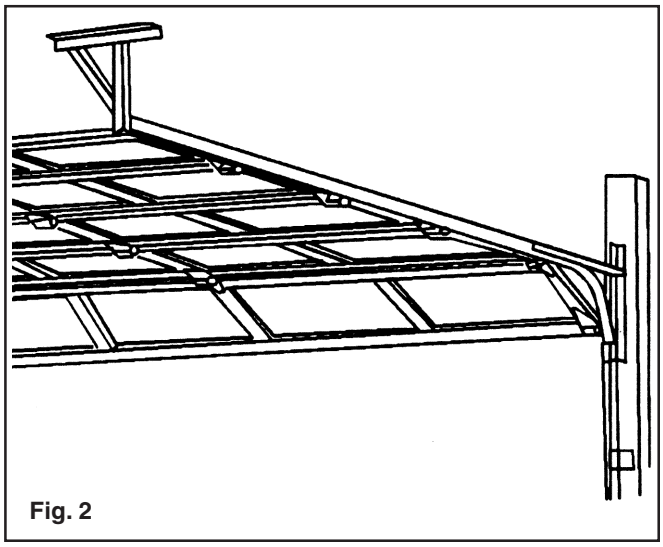

Fig. 2

Some large doors might weigh as much as **400 pounds** when the spring tension is removed. The weight of the door will not be apparent when you first begin to close the door. The door will feel progressively heavier as it is lowered until its full weight (as much as 400 pounds) is realized about one foot from the floor. A single car door may weigh as much as **200 pounds.** (FIG. 3)

**NOTE:** Wood blocks should be placed underneath the door when closing to prevent fingers from being trapped.

**WARNING**

**To avoid injury, keep hands and fingers clear of section joints, track, and other door parts while the door is opening and closing.**

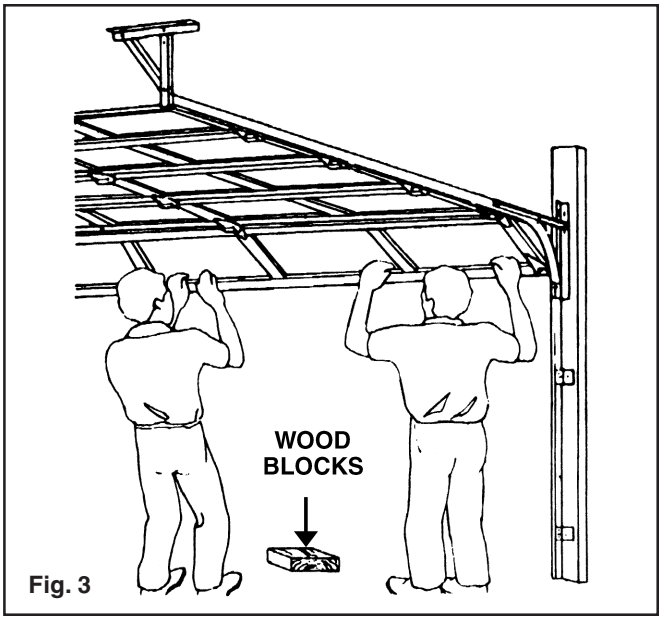

Fig. 3

## Removing EZ-Set Spring™

**Step 1a:** With the door in the DOWN position, insert a 1/4" hex driver completely into each worm drive and using the reverse (counter-clockwise) direction on the drill, remove all the tension from each spring. (FIG. 1A)

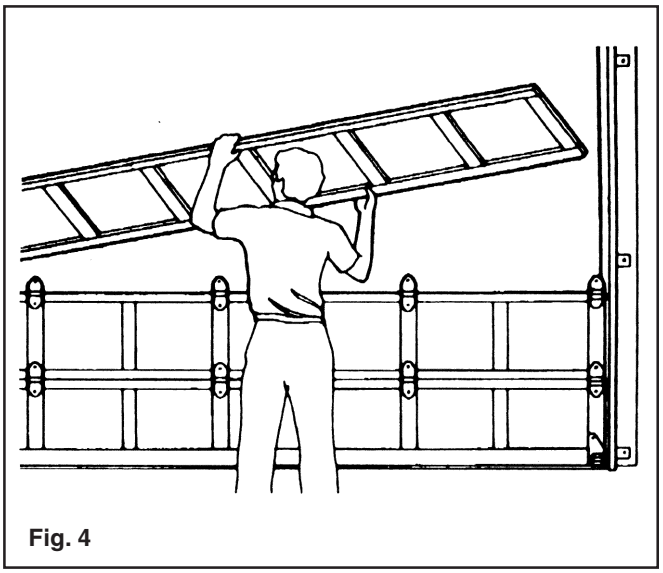
Fig. 4

## Removing Door Sections

**Step 2:** The door can now be disassembled. Starting with the top section, remove the hardware and unstack the sections one at a time. (FIG. 4)

**Step 3:** After all sections have been removed from the opening, detach all remaining track and hardware from the jambs. The hangers that attach the rear ends of the overhead track to the ceiling (called rear track hangers) in many cases can be reused on the new door if made of 13 gauge (3/32") or heavier steel and is not loose or unstable. (FIG. 5)

**WARNING**

**To avoid installation problems which could result in personal injury or property damage, use only the track specified and supplied with the door. Do not attempt to reuse old track.**

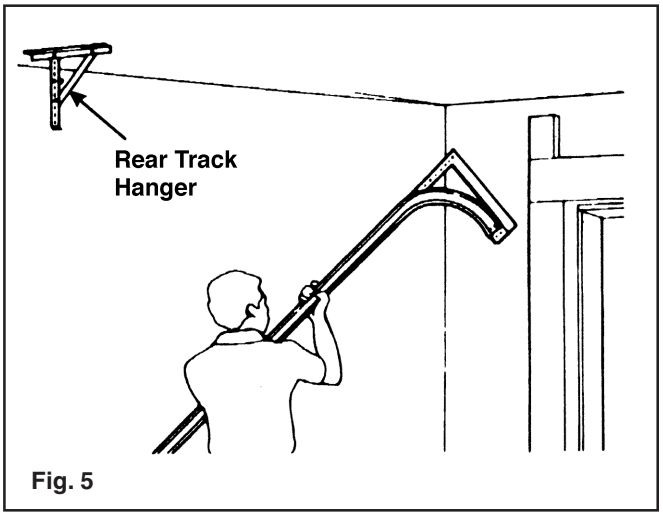

Fig. 5

# Check Headroom/ Backroom/Sideroom

Headroom is the space needed above the top of the door for the door, the overhead tracks, and the springs. Measure to check that there are no obstructions in your garage within that space. The normal headroom space requirement is shown in the chart below. The backroom distance is measured from the back of the door into the garage, and should be at least 18" more than the height of the garage door. A minimum sideroom of 3¾" (5½" EZ-Set Spring™) should be available on each side of the door on the interior wall surface to allow for attachment of the vertical track assembly. (FIG. 6)

Track Radius: The radius of your track can be determined by measuring the dimension “R” in Figure 7. If dimension “R” measures 11" to 12", then you have a 12" radius track. If “R” equals 14" to 15", then you have a 15" radius track. (FIG. 7)

**Headroom requirements:** The normal headroom space requirement is shown in the chart. (See page 6 or 7 if you have a question on which type of spring you have.)

**NOTE:** About 3" of additional headroom height at the center plus additional backroom is needed to install an automatic garage door opener. Check door opener instructions.

**Headroom Requirement Chart**

| SPRING TYPE | TRACK RADIUS | HEADROOM REQUIRED |
|---|---|---|
| EZ Set Extension Spring™ or Extension Spring | 12" | 10" |
| EZ Set Extension Spring™ or Extension Spring | 15" | 12" |
| EZ Set Torsion Spring™ or Torsion Spring | 12" | 12" |
| EZ Set Torsion Spring™ or Torsion Spring | 15" | 14" |

Low Headroom? If you have restricted headroom, several remedies are available. See page 40 for various options.

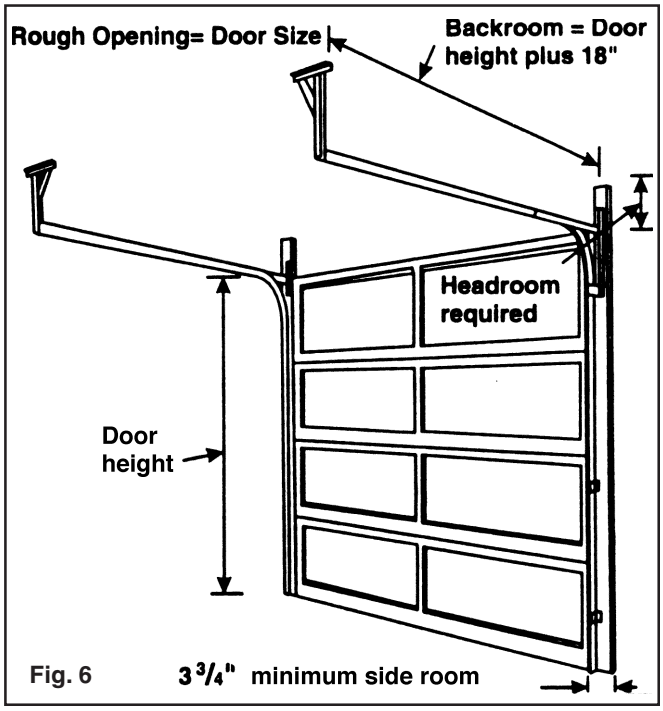

Fig. 6

**Track Radius Measurement**

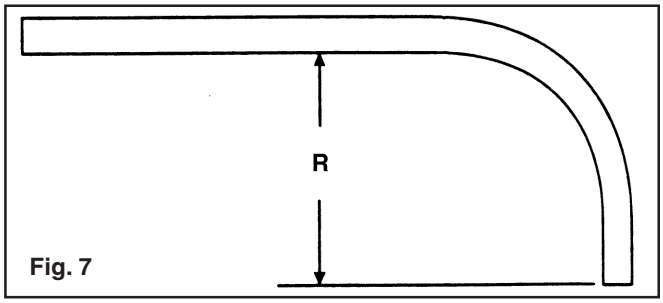

Fig. 7

# Preparing the Opening

**Step 1:** On the inside of the garage your opening should be framed with wood jambs, 2" x 6" if possible, as shown in Figure 8. The side jambs should extend to approximately the same height as the headroom required. If you have just removed an old door, the jambs should be inspected for the condition of the wood. If the wood is rotten, it should be replaced now. The jambs should be plumb and the header level. If there are any bolts fastening the jambs to the wall, the heads should be flush so they don't interfere with the installation of your new door. (FIG. 8)

**NOTE:** Rough opening = Door size

**For Torsion Springs Only**

**WARNING**

If your door has a torsion assembly, **you must make sure that the wood anchor pad (see Fig. 8) is firmly attached to the garage wall.** Failure to securely attach the anchor pad could allow the springs to violently pull away from the garage wall, and could result in severe injury and/or property damage. **Under no circumstances should the anchor pad be attached with nails.**

Refer to Figure 8 for the configuration of 2" x 6" wood jambs. Wood anchor pad should run from header jamb to ceiling to a maximum length of 18".

**IMPORTANT:** The wood anchor pad must be made of a Grade 2 or better Southern Yellow Pine (also known as Southern Pine or Yellow Pine). The Southern Yellow Pine must be free of splits and cracks. **Do not use wood labelled as spruce-pine-fir (or SPF).**

The wood anchor pad must be installed into the frame of the garage with at least four 3/8" x 4" long lag screws (one at each corner). The four lag screws must be installed no closer than 1 1/2" from the sides and the ends of the 2 x 6. These lag screws must fasten into the wood frame of the garage, not the drywall or sheet rock. Wood anchor pad and 3/8" x 4" lag screws are not supplied.

**NOTE:** The wood anchor pad can be off-center to the width of the opening by up to 10" in either direction.

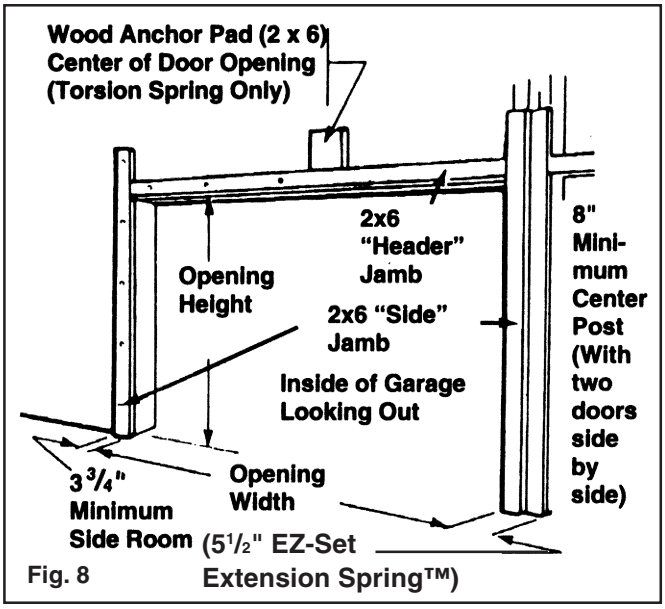

Fig. 8

**Step 2:** Door stop molding should be temporarily nailed to the edges of the jambs flush with the inside. (FIG. 9)

Stop molding featuring a built in weather seal is offered as an option.

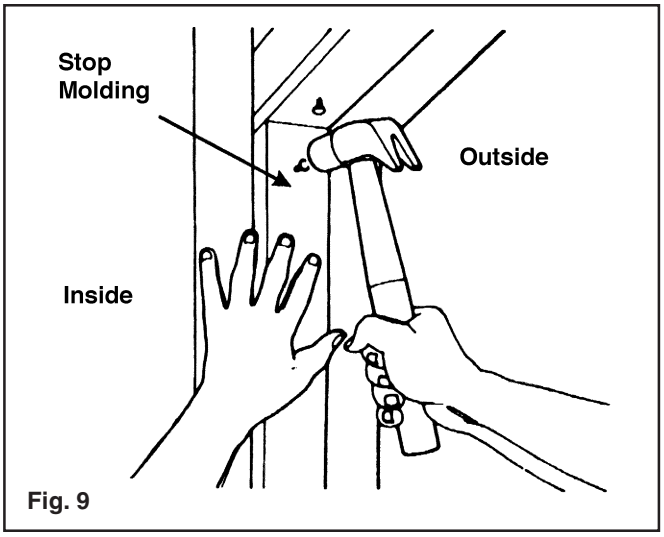

Fig. 9

# Installing the New Door

## Preparing and Installing Door Sections

**Step 1:** Spread the hardware on the garage floor in groups so that you can easily find the parts.

**Step 2:** Find the section with the black weatherstrip fastened to one edge. The weatherstrip is on the bottom edge of the bottom section. Some models have filler tube(s) inserted into the weatherstrip, remove them now. Place the section on saw horses face down. (FIG. 10)

**NOTE:** The weatherseal should be trimmed flush with the edge of the door.

**NOTE:** Cover saw horses with carpet or cloth so as not to scratch section.

**Step 2a:** Bend and break apart bottom brackets by hand along end tabs as shown.

**NOTE:** Remove connecting tab. (FIG. 11)

**Step 3:** Insert safety tabs on bottom bracket into slots on end stile of door. Slide bottom bracket up to fully engage tabs (FIG. 12). Attach all hardware with #14 x 5/8" sheet metal screws. Attach the bottom brackets with two screws to the bottom corners of the section. Screws go into the end stiles. Hook the looped ends of the steel lift cable over the buttons on the bottom brackets. (If your door came with standard extension or EZ-Set Extension Springs™, the lift cables are the longer and smaller diameter of the two sets of cable. If your door came with EZ-Set Extension Springs™, do NOT attach lift cables at this time! Do NOT use the shorter safety containment cables as lift cables, as this can cause improper door function). (FIG. 13)

**WARNING**

**Failure to properly engage safety tabs on bottom bracket into slots on edge of door can result in severe injury when spring tension is applied.**

**Step 4:** Hinges are identified by number 1, 2, 3 (and sometimes 4, on 5 section doors only). This number is stamped on the hinge. Attach a number 1 hinge to each pair of pre-punched holes along the top edge of the section. The number is stamped on the side of the hinge that is to be attached to the section. (FIG. 14)

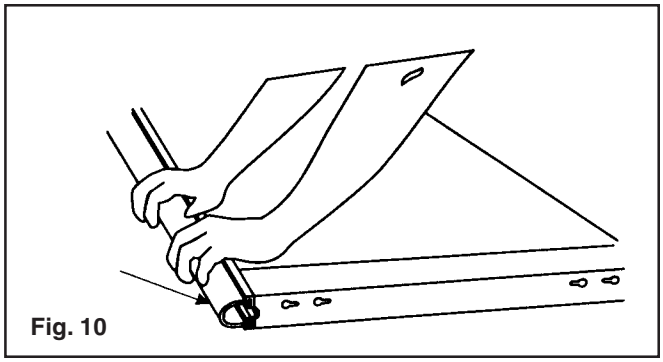

Fig. 10

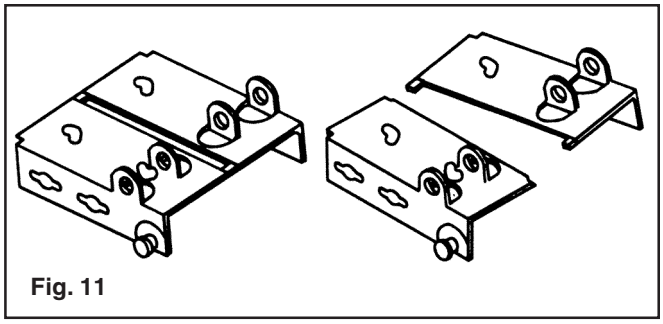

Fig. 11

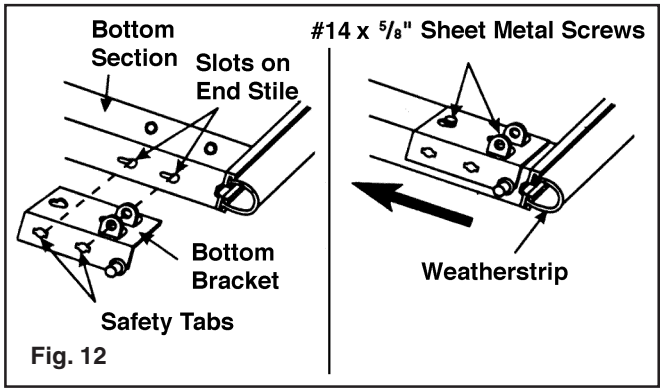


Fig. 12

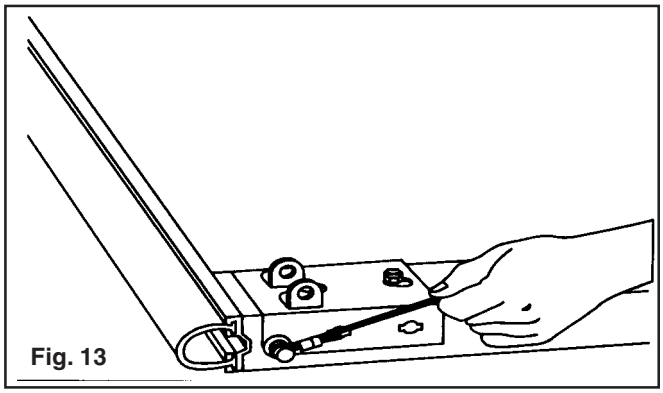

Fig. 13

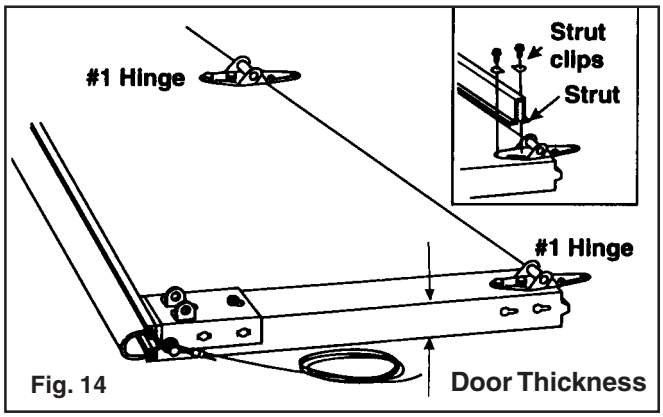


Fig. 14

**Note:** Determine if your door thickness is 1 3/8" or 2". Refer to Figure 14 (on previous page) for an illustration depicting how to measure door thickness. If the following chart shows a need for a reinforcing strut that is NOT on the top section, it should be attached overlapping the hinge. If the reinforcing strut is on the top section, it should be attached just above the top roller brackets. (FIG. 27, page 20) Use #14 x 5/8" sheet metal screws and the strut clips provided to attach the strut as shown in the illustration. DO NOT use the pre-drilled holes in the strut. (FIG. 14)

**Section Requiring Struts**
**(1 3/8" Thick Doors)**

| Door Width | Bottom Section | 3rd Section | Top Section |
|---|---|---|---|
| 15' & less | — | — | — |
| 15'2" to 16' | — | — | 1 |
| 16'2" to 18' | 1 | 1 | 1 |

**(2" Thick Doors)**

| Door Width | Models: HDG, HDGL 4300, 4301, 4310 | 2400, 4400 2401, 4401 |
|---|---|---|
| 15' & less | — | — |
| 15'2" to 18' | 1 (top section) | — |
| 18'2" to 20' | 1 (top section) | 1 (top section) |

* All other 2" thick doors require no struts

**NOTE:** Doors installed in the high windload regions (Florida and other hurricane prone areas) may require additional reinforcement beyond what is detailed in these instructions. Please refer to the Windload supplemental instructions for special requirements.

# Lift Handle Instructions

**Installing One Lift Handle on Inside**
If a lift handle is desired on the inside of your door only, position the two square holes over the pre-punched holes located at the bottom nearest the center of the door using the #14 x 5/8" sheet metal screws. (FIG. 15)

**NOTE:** Holes may be off center. Always use holes at the bottom nearest the center of the door.

**Installing Two Lift Handles**
If you want to install two lift handles (outside & inside) on your insulated door, drill two 1/4" holes straight through the door using the pre-punched holes located at the bottom center of the door as a template. From the outside, enlarge the two 1/4" holes to 3/8", being careful not to drill through the

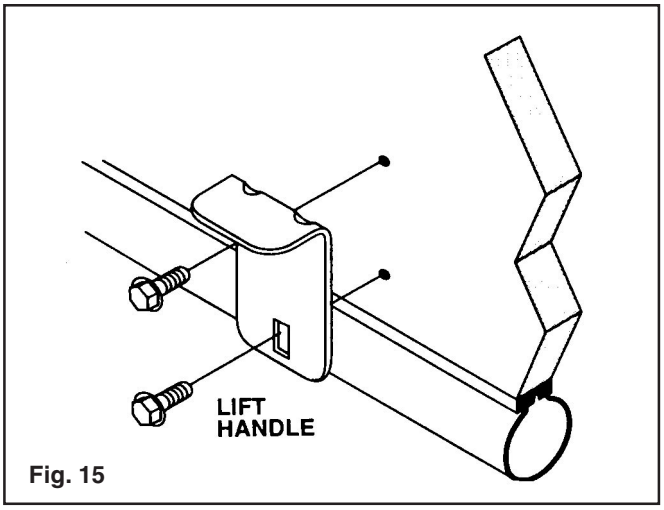

Fig. 15

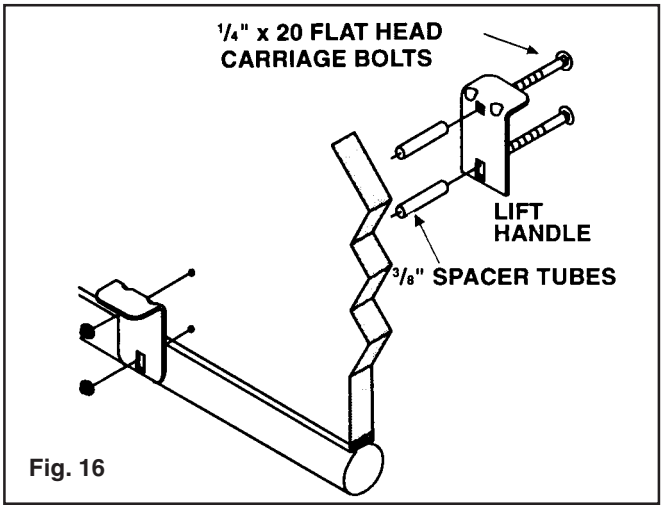

Fig. 16

inside skin. Remove any excess foam from the 3/8" holes. Insert the 3/8" spacer tubes from the outside of the door. Position each plate on either side of the drilled holes and fasten together with two 1/4"-20 flat head carriage bolts (head should be on outside of door), and two 1/4" flange nuts. (FIG. 16)

**NOTE:** If the door has a #2 slide bolt lock (pg. 24) the lift handle should be located on the end stile underneath the lock location above the bottom bracket.

**Step 5:** Place the section in the opening so that it is against the stop molding and centered from side to side. Place a level on the section and use a piece of wood under one end or the other (if necessary) to make the section level. (FIG. 17)

**Step 6:** Remove the level and drive a 3½" nail in the jambs at each end and bend it over the edge of the section to hold the section in place. (FIG. 18)

**NOTE:** These nails are all that will hold the stacked door section in place until the tracks are secured to the back jambs. Be sure the nails hold the sections firmly in position.

With the chart (FIG. 19), determine the order in which you will attach the remaining sections.

**NOTE:** If a lock assembly was ordered with the door, the holes for the lock are pre-drilled. (Lock templates are available for doors without pre-drilled holes.)

**Step 7:** Place the next section face down on the saw horses. If your door is to have a lock, this section will be the one with holes in the center of the panel face. Identify the bottom edge as shown in the illustration. (FIG. 20)

Attach a number 2 hinge to each end at the top edge. Remember that the number is stamped on the side of the hinge that is to be attached to the section. Attach a number 1 hinge to all other pre-punched holes along the top edge of the section.

## Lock Installation

**NOTE: If your door is going to be equipped with an automatic garage door opener, make sure that the door is always unlocked when the operator is being used. This will avoid damage to the door.**

Determine which locking system was provided with your door. If the door has no lock, proceed to Step 8 on page 20.

### #1 Snap Latch AUTO-LATCH LOCK ASSEMBLY INSTRUCTIONS

1. Slide the outside handle (1) and the two lock spacers (7)* through the holes in the lock section. (FIG. 21)

*2" thick doors do not receive lock spacers.

2. Attach the backing plate (2) to the outside handle (1) using two #10 x 24 machine screws (3).

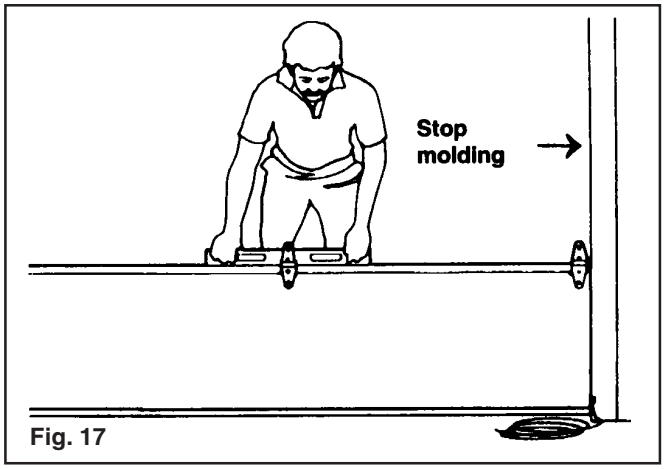

Fig. 17

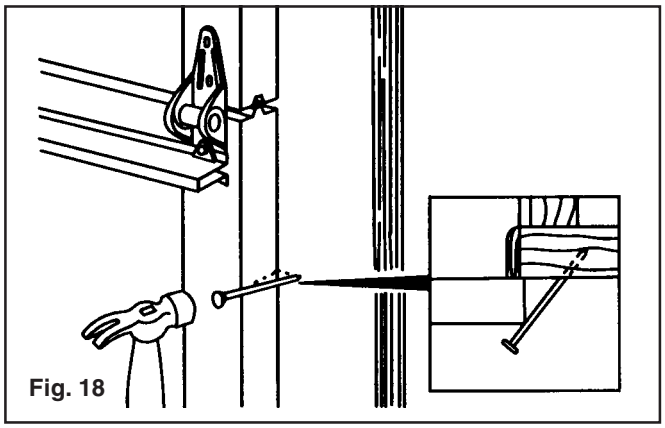
Fig. 18

| Door Height | 1st Bottom Section | 2nd Section (lock section) | 3rd* | 4th | 5th |
|---|---|---|---|---|---|
| 6'0" | 18" | 18" | 18" | 18" | — |
| 6'3" | 18" | 18" | 18" | 21" | — |
| 6'6" | 21" | 18" | 18" | 21" | — |
| 6'9" | 21" | 21" | 18" | 21" | — |
| 7'0" | 21" | 21" | 21" | 21" | — |
| 7'6" | 18" | 18" | 18" | 18" | 18" |
| 7'9" | 18" | 18" | 18" | 18" | 21" |
| 8'0" | 21" | 18" | 18" | 18" | 21" |

Fig. 19 *Section with general safety label.

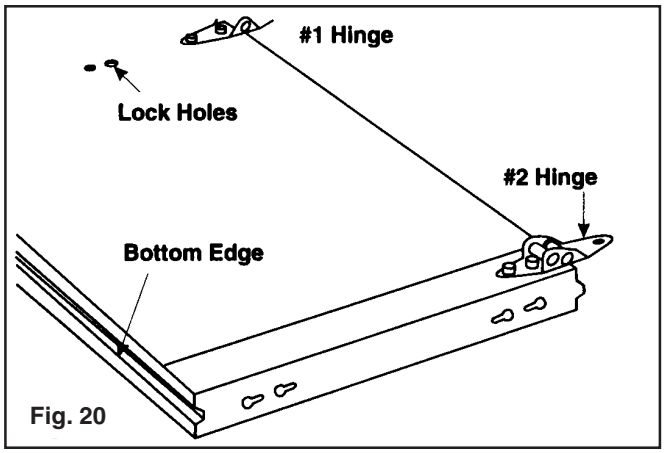

Fig. 20

3. Slide the inside release handle (4) over the shaft of the outside handle and secure in place using the Tinnerman nut (5). Be sure the Tinnerman nut is pressed firmly against the inside release handle.

4. Slide the vinyl sleeve (6) over the arm of the inside release handle.

**NOTE:** The Spring Latches, Striker Plates and Lock Cables are to be assembled after the door and all other hardware are in place. (Refer to Page 24)

## #3 Lock Bar
## LOCK ASSEMBLY INSTRUCTIONS

1. Remove foam from predrilled lock holes with a $^{5}/_{32}$" diameter bit.

2. Position the four green Tinnerman nuts (15) as shown with two nuts on either side of the door. (Pliers can be used to assist in placement of the Tinnerman nuts.) Attach the outside escutcheon plate (5) to the door by inserting two #10 x 1" countersunk slotted screws (3) through the plate into the two outside Tinnerman nuts. (FIG. 22)
3. Insert the spacer tube (13) into the predrilled hole by slightly squeezing the ring. (Note: Use 2" spacer tube for 2" thick doors, $1^{3}/_{8}$" spacer tube for $1^{3}/_{8}$" thick doors.) Position the back-up plate (14) for attachment of the cylinder lock (7) and collar (9) with the cylinder back plate (10) and screws (12) as shown. (Indent of back plate to face of door.) (FIG. 22)

## #1 Snap Latch

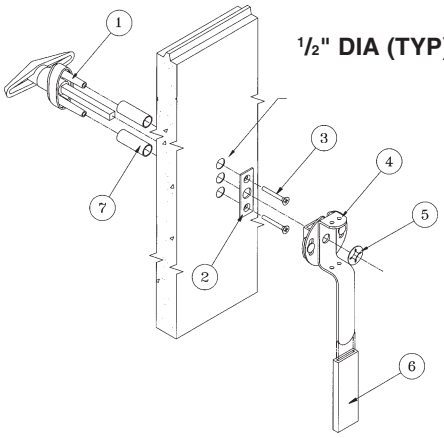


| NO. | QTY. | Description |
|---|---|---|
| 1 | 1 | Outside “T” Handle |
| 2 | 1 | Backing Plate |
| 3 | 2 | #10-24 Machine Screws |
| 4 | 1 | Inside Release Handle |
| 5 | 1 | Tinnerman Nut |
| 6 | 1 | Vinyl Sleeve |
| 7 | 2 | Spacer Tubes ($1^{3}/_{8}$" Thick Doors Only) |

**Fig. 21** Key blanks are available through Clopay.

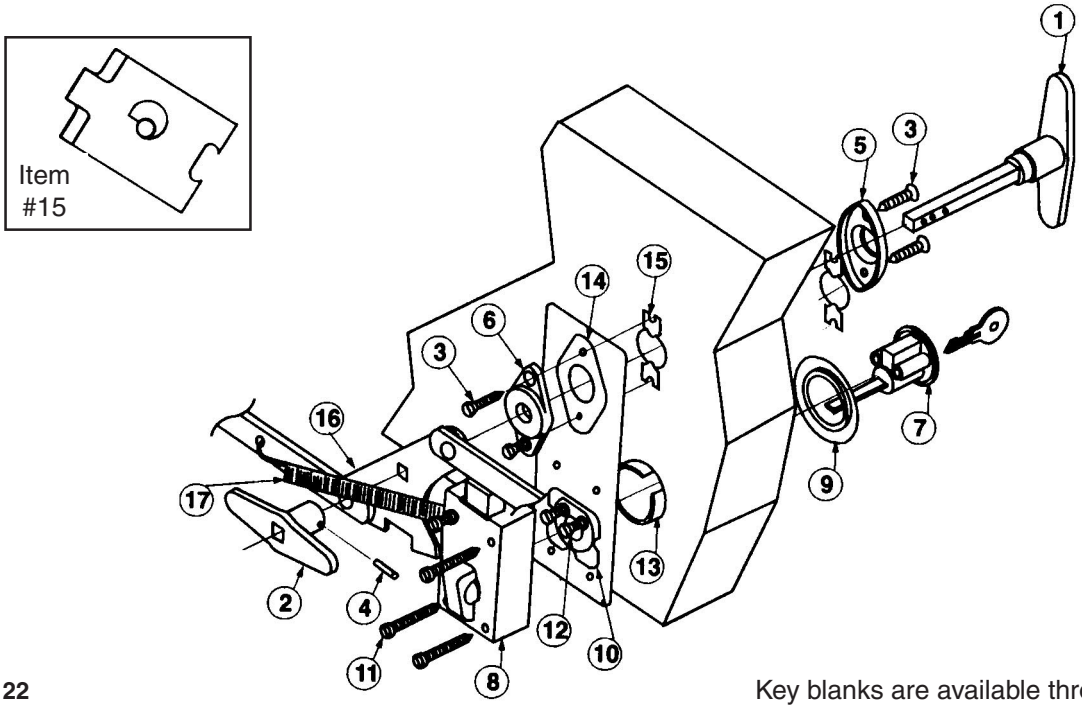


**Fig. 22** Key blanks are available through Clopay.

**NOTE:** Tail of cylinder lock (7) may have to be trimmed (with pliers) on 1 3/8" thick doors.

4. Attach the inside escutcheon plate (6) to the inside of the door using two #10x1" screws (3) inserted through the inside Tinnerman nuts (15), making sure to go through the back-up plate (14). (FIG. 22)

5. Insert the outside T-handle (1) through the door, placing the lock bar assembly (16) through the square spindle of the T-handle from the inside. Next, trap the lock bar assembly by slipping the inside T-handle (2) over the spindle and inserting the roll pin (4) through a hole in the spindle. (FIG. 22) (You may want to tape the lock bar guides to the back of the door temporarily.)

Steps 6 and 7 can be completed after the vertical track is installed (refer to page 24).

6. Slide an equal number of lock bar guides (18) on each lock bar and line up each bar with the slot in the vertical track after the vertical track is installed. Attach one lock bar guide to each end stile using #14 x 5/8" sheet metal screws. (FIG. 23)

7. If your door is over 10 feet wide, space two lock bar guides (18) in the middle of each lock bar, remove the backing of the foam tape on the reinforcement plate (19) and firmly press the plate into position (the door should be clean and dry when applying the foam tape). Drill 5/32" diameter holes into the back of the door, using the holes in the reinforcement plates as templates. These holes should just pierce the inside skin of the door. Attach the remaining lock bar guides as shown with two #14 x 5/8" sheet metal screws (20) per lock bar guide. (FIG. 23)

8. Attach the night latch (8) to the back-up plate (14) using the #10x1 1/2" sheet metal screws (11). The lock bar spring is attached to the upper left hand corner of the night latch using the #10x1 1/2" sheet metal screw. The other end of the lock bar spring (17) should be hooked to the left lock bar. (This is done with door in the unlocked position.) (FIG. 22)

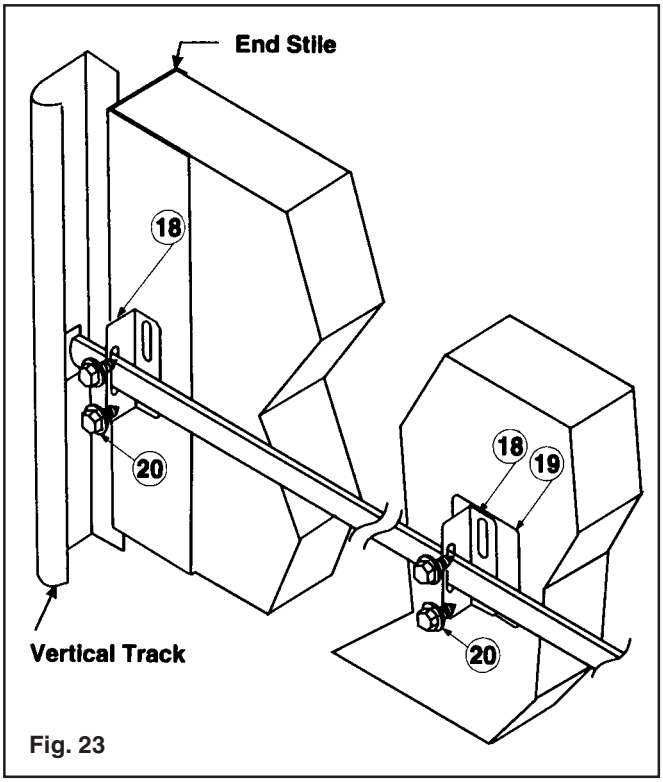

Fig. 23

**#3 LOCK BAR ASSEMBLY PARTS LIST**

| No. | Qty. | Description |
|---|---|---|
| 1 | 1 | Outside "T" Handle |
| 2 | 1 | Inside "T" Handle |
| 3 | 4 | #10 x 1" Countersunk Slotted Screw |
| 4 | 1 | Roll Pin |
| 5 | 1 | Outside Escutcheon Plate |
| 6 | 1 | Inside Escutcheon Plate |
| 7 | 1 | Cylinder Lock |
| 8 | 1 | Night Latch |
| 9 | 1 | Collar |
| 10 | 1 | Cylinder Back Plate |
| 11 | 4 | #10 x 1 1/2" Sheet Metal Screw |
| 12 | 2 | Cylinder Screw |
| 13 | 1 | Spacer Tube |
| 14 | 1 | Back-Up Plate |
| 15 | 4 | Green Tinnerman Nut |
| 16 | 1 | Lock Bar Assembly |
| 17 | 1 | Lock Bar Spring |
| 18 | 2 or 4 | Lock Bar Guide |
| 19 | 0 or 2 | Reinforcement Plate |
| 20 | 4 or 8 | #14 x 5/8" Sheet Metal Screw |

# Installing Door Sections
**(Continued)**

**Step 8:** Place the second section on top of the first section. Drive a 3½" nail in the jambs at each end and bend it over the edges of the section to hold the section in place. Attach the hinges from the top of the first section to the bottom of the second. (FIG. 24)

**Step 9:** Place the third section on saw horses. Attach #3 hinges to the ends at the top edge and #1 hinges to all other stiles along the top edge. (FIG. 25)

**NOTE:** If your door was supplied with more than one strut, attach one in the same manner as shown in FIG. 25A. (Consult chart on top of page 16.) DO NOT use the pre-drilled holes in the strut. Attach strut with strut clips provided.

**Step 10:** Place the third section on top of the other sections and nail in place as before. Attach the hinges from the top of the previous section to the bottom of this section. (FIG. 26)

If you have two sections left, repeat Steps 9 and 10 using #4 hinges on the end of the top edge and #1 hinges to all other stiles along the top edge.

**Step 11:** Place the last section on the saw horses. Attach the top roller brackets as shown. The top roller brackets are to be attached with three, #14 x ⅝" sheet metal screws. The top of the bracket goes into the bottom hinge hole. The bottom goes into smaller holes, either 6¼" or 8" (depending on door model) from top of section. (FIG. 27)

**Note: Models 4400/01, 2400/01**
**Sizes 8' Wide and 10' Wide Doors with**
**WINDOWS IN TOP SECTION ONLY**
The above models require the addition of two ¼" washers on the bottom of each top bracket before the installation of screws. Fig. 27A is followed only when the window section is used as the top section.

If your door was supplied with strut(s) one will be attached to the top section as shown. (FIG. 28) (Consult chart on top of page 16.) DO NOT use the pre-drilled holes in the strut. Attach strut with strut clips provided.

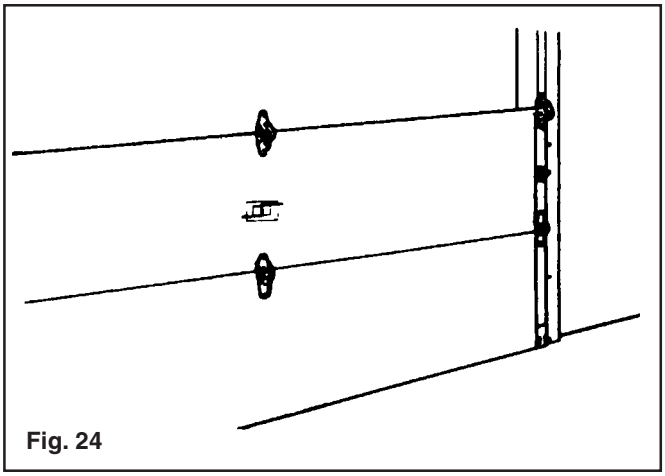
Fig. 24

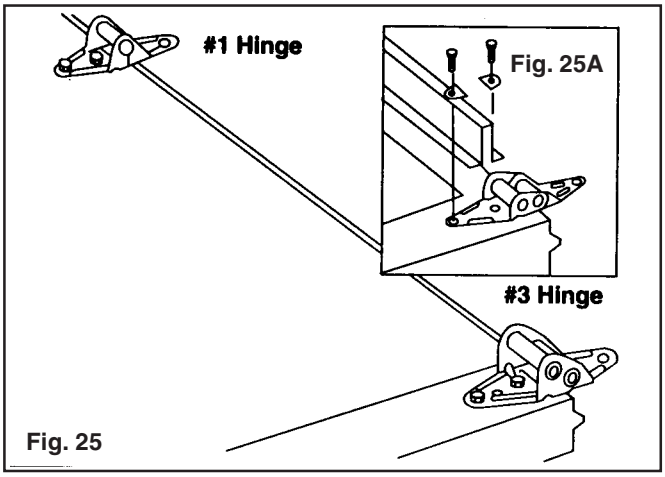

Fig. 25

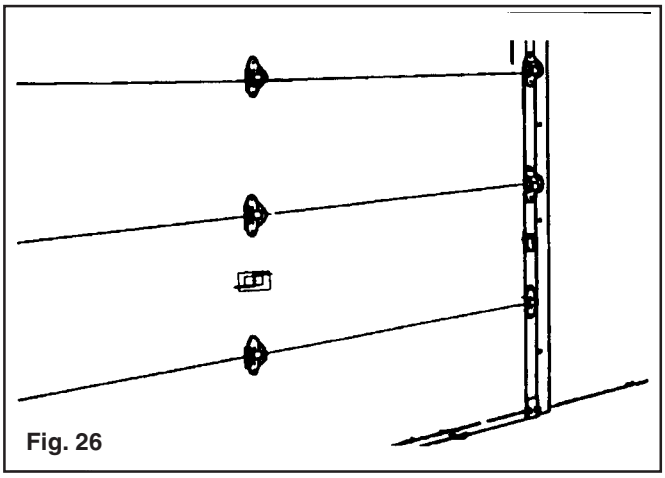
Fig. 26

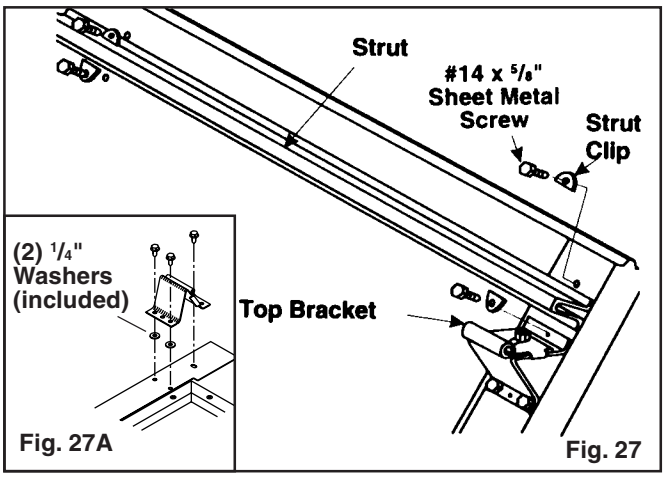

Fig. 27A
Fig. 27

**Step 12:** Place the last section on top of the others and nail in place as before. Attach the hinges from the top of the previous section to the bottom of this section.

Place a roller in the top and bottom brackets and in the tubes in each of the hinges at the ends of each section. Some hinges have two tubes. Place the roller in the tube that is farthest from the face of the door. (FIG. 28)

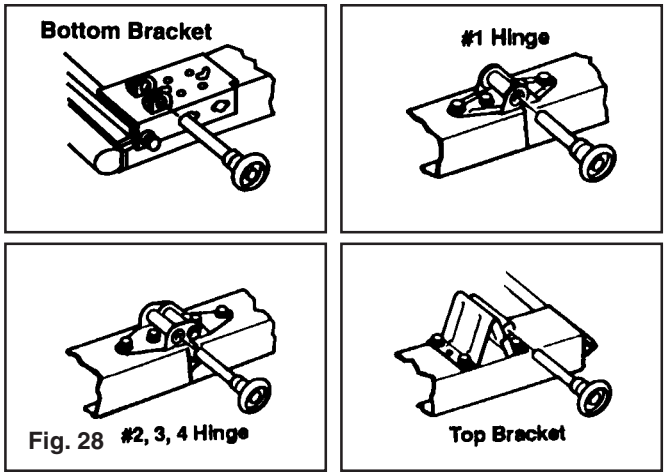

Fig. 28

## Assembling and Installing the Track

Before assembling brackets to vertical track be sure to read Step 1 and Step 2. Refer to illustration for placement of brackets on track.

**NOTE:** Brackets may already be riveted in place. If additional adjustment is required, the rivets can be drilled out and the brackets can be reattached with track bolts and flange nuts.

**WARNING**

**To avoid installation problems which could result in injury or property damage, use only track provided with new door.**

**Step 1:** Loosely fasten the track brackets to the vertical track using one 1/4" x 5/8" track bolt and 1/4" flange nut as shown with the head of the bolt inside the track. There are two sizes of brackets. The shortest track brackets should be installed ten inches from the bottom of the track with the flange facing the flat side of the track. This ensures proper placement of the track, one on the left and one on the right. The flat side of the track goes toward the wall. (FIG. 31)

Remaining long track brackets should be centered on the vertical track.

**Step 2:** Loosely attach the flag bracket to the top of the track with two 1/4" x 5/8" track bolts and 1/4" flange nuts with the head of the bolts in the track. Make sure bolts and nuts are attached through the proper holes in flag bracket for your door thickness. (FIG. 29-30)

(Refer to FIG. 30 to determine proper bolt placement.)

**NOTE:** If additional adjustment is required, horizontal slots in flag brackets can be used for attachment to vertical track.

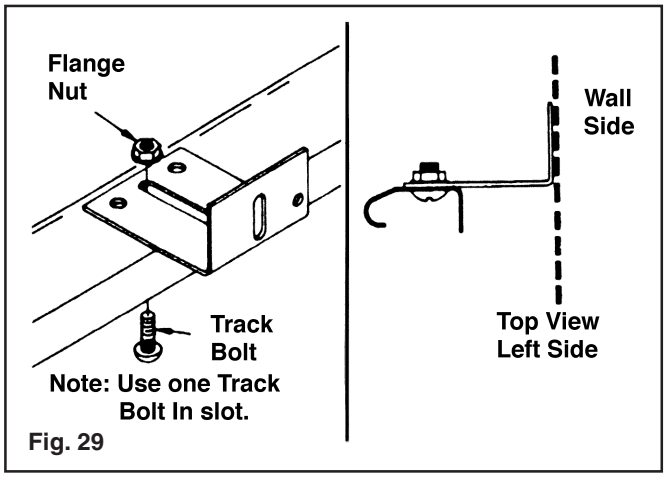

Fig. 29

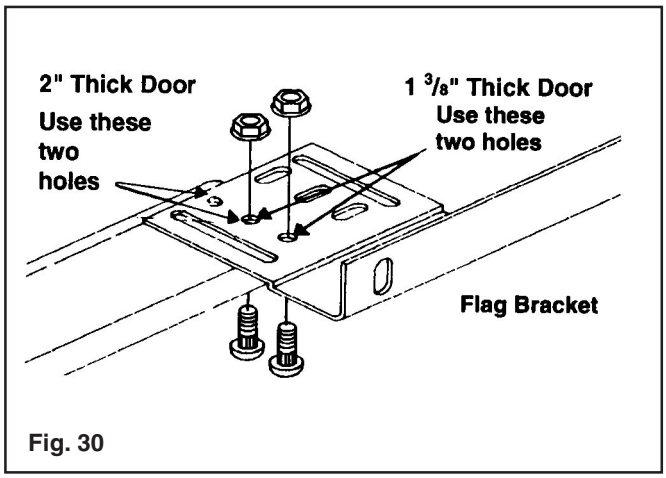

Fig. 30

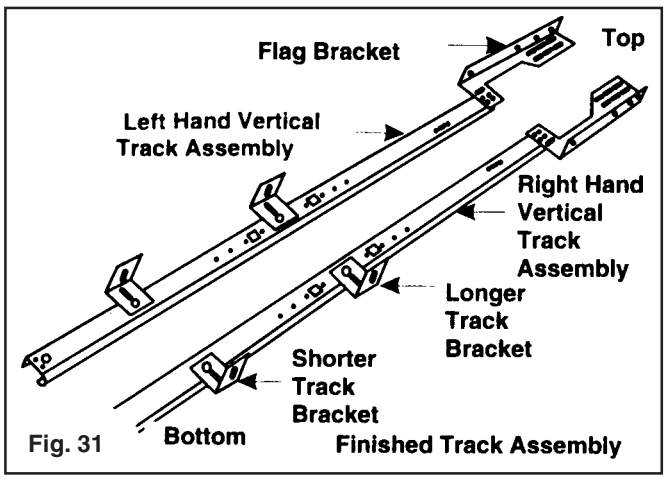

Fig. 31

**Step 3:** Place the track over the rollers on the door. Move the track close to the door so that the rollers are all the way into the hinges. Do not force the track too tightly or the door will bind. This should leave about 3/8"-1/2" between the edge of the door and the track. Pilot holes of 3/16" are required at each lag screw location before installing the lag screw. Lift track about 1/2" from the floor and fasten the flag bracket and track brackets to the jamb with 5/16" x 1 5/8" lag screws. The flag bracket requires three screws, one each in the top, middle, and bottom holes. Do this for both sides of the door. When the track brackets and flag brackets are securely fastened to the jamb, tighten the track bolts and flange nuts connecting the flag brackets to the tracks. (FIG. 32)

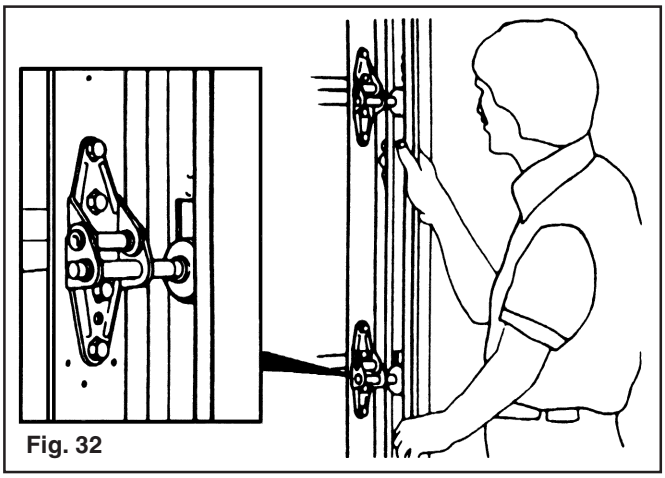

Fig. 32

**NOTE:** The tops of the vertical tracks must be level with each other. Check this by measuring from the top of the door sections to the top of the track on both sides. If they are not equal, cut some material off the bottom of one track to lower it or raise the other track.

**Do not raise the vertical track beyond the bottom rollers on the bottom section of door.**

**Step 4:** Fasten the horizontal angle to the horizontal (curved) track with two 1/4" x 5/8" track bolts and 1/4" flange nuts so that the heads of the track bolts are on the inside of the track. On some doors this angle may be 82" long and will require three additional fasteners per side. If the angle has been preassembled, skip Step 4 and proceed with Step 5. (FIG. 33)

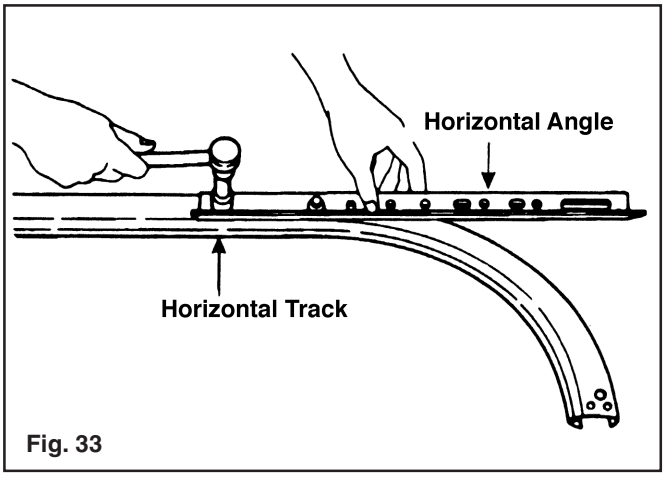


Fig. 33

**Step 5:** Temporarily support the rear end of the track with a rope from the trusses overhead in the garage or on a tall ladder. (FIG. 34)

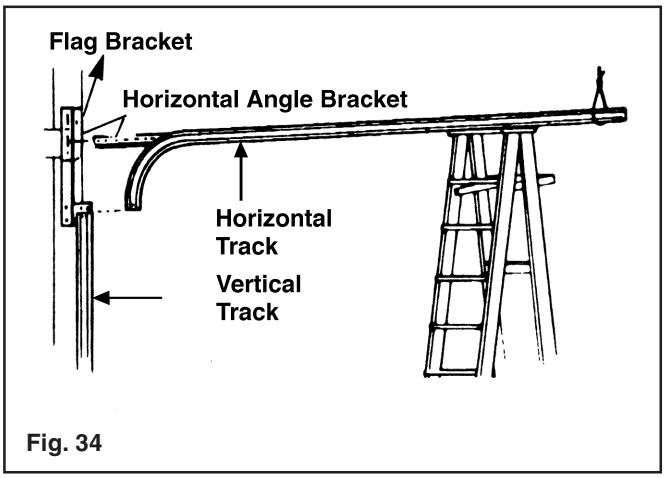


Fig. 34

**Step 6:** Place the track over the roller in the top bracket. Attach the curved end of the horizontal track to the flag bracket with two 1/4" x 5/8" track bolts and 1/4" flange nuts so that the heads of the screws are on the inside of the track. Attach the end of the horizontal angle to the top of the flag bracket with a 3/8" x 3/4" carriage bolt and 3/8" hex nut. The horizontal and vertical track must join together to form a continuous channel for the rollers. (FIG. 35)

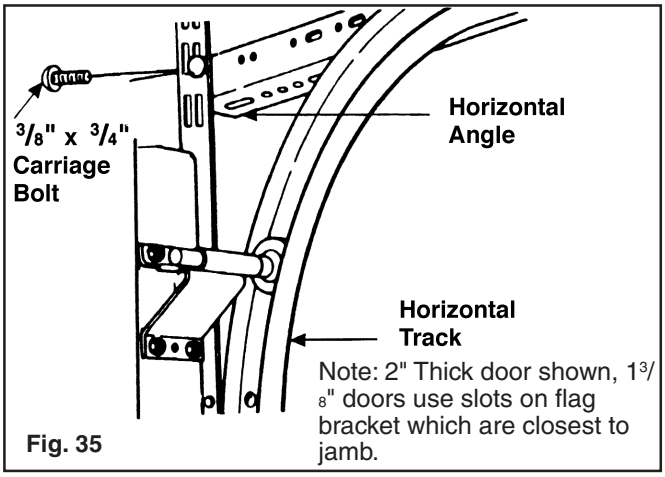


Fig. 35

**Step 7:** Rear track hangers need to be made at this time. Use 1 1/4" x 1 1/4" punched angle, 13 gauge or 3/32" steel. These are not provided with the standard hardware. They are used to attach the rear of the horizontal track to the ceiling joist.

Enough angle iron or punched angle should be purchased to make two rear track hangers. These hangers must be strong enough to hold the full weight of the door. Attach a bolt at least 1" long through the end of each track to stop the door at the end of its travel. (FIG. 36)

**WARNING**

**Sway braces must be used to prevent tracks from spreading and allowing door to fall. Bolts placed in the end of each track (FIG. 36) must be at least 1" long to prevent the top section from exiting the track.**

**NOTE:** Rear track hangers should not be mounted any further than 6" from the end of horizontal track.

**Step 8:** Placement of rear track hangers is critical for the door to operate properly. The rear track hangers should hold the horizontal track level and square to the door. Squareness should be measured by comparing two diagonal distances: 1) the distance from the top left hand corner of the door to the rear of the right hand horizontal track and 2) the distance from the top right hand corner of the door to the rear of the left hand horizontal track.

Adjust the position of the tracks if the squareness distances are not within 1/2" of each other. Horizontal track can be out of level up to 1" from front jamb to rear track hanger. (FIG. 37)

When the track is square and level with the opening, the track hangers can be fastened permanently to the ceiling trusses. Three 5/16" x 1 1/2" lag screws are recommended. Be sure 3/16" pilot holes are drilled before installing 5/16" lag screws. The attachment must be strong enough to hold the weight of the door. (FIG. 37)

**WARNING**

**Use adequate length screws to fasten rear track hangers into trusses. Door may fall and cause serious injury if not properly secured.**

**Step 9:** With the track installed, the top door section can now be properly adjusted. With the slide on the top bracket loose, force the top of the door against the stop molding or door jamb. Pull the roller towards you so it is tight against the groove in the track and tighten the slide bolts. (FIG. 38 & 39)

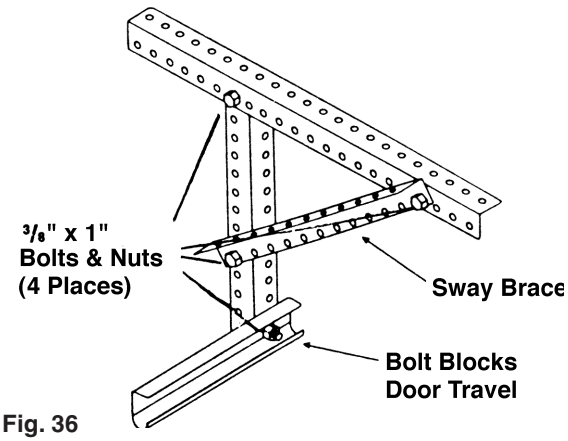

Fig. 36

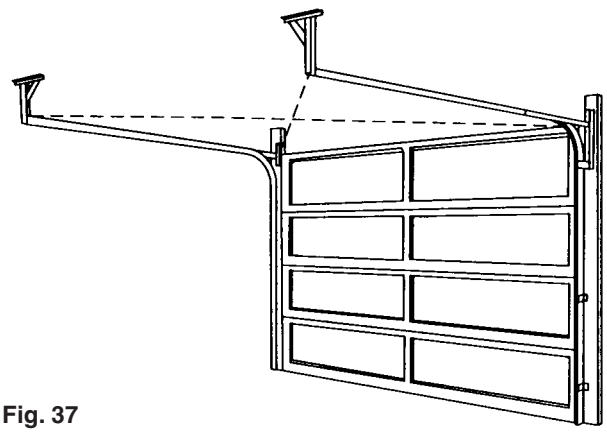
Fig. 37

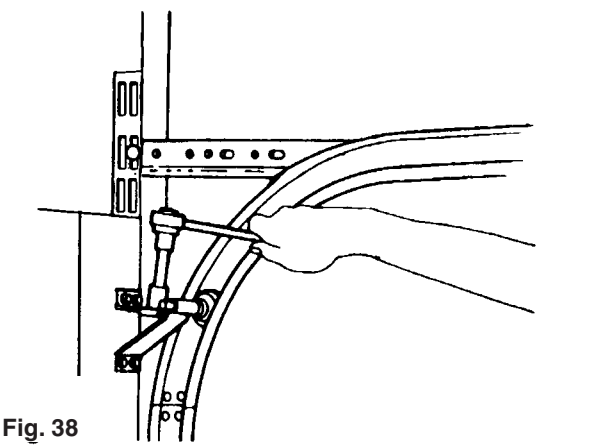
Fig. 38

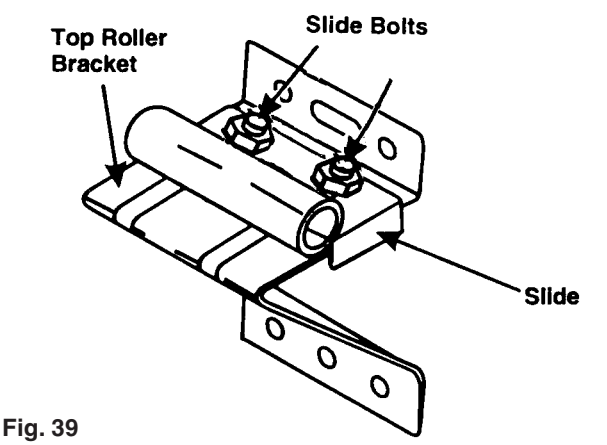

Fig. 39

**Step 10: Completing the Lock Assembly**
(doors with locks only)

**NOTE: If your door is going to be equipped with an automatic garage door opener, make sure that the door is always unlocked when the opener is being used. This will avoid damage to the door.**

## #3 Lock Bar ASSEMBLY INSTRUCTIONS FOR LOCK BAR GUIDES

Adjust the lock bar guides so that the lock bars enter the lock holes in the vertical track at both sides of the door. Fasten each lock bar guide with two #14 x 5/8" sheet metal screws. (FIG. 40)

## # 1 Snap Latch ASSEMBLY INSTRUCTIONS FOR SPRING LATCHES AND STRIKER PLATES

**NOTE:** If attaching an automatic garage door opener, the spring latches and striker plates should not be installed.

**Step 1:** Once the door is completely assembled attach the striker plate (1) to the track using two 1/4" x 5/8" track bolts (2) and two 1/4" flange nuts (3). Insert bolts through the two 9/32" holes located top and bottom of the large knock-out. NOTE: Be sure the striker plate wraps around the back of the track as shown. Do not tighten. (FIG. 41)

**Step 2:** Place the spring latch (4) on the end stile of the door section and align the spring latch with the striker and the holes in the stile. Secure using two #14 x 5/8" sheet metal screws (5). Make sure that the striker fits around the spring latch and secure in place.

## For Lock Cables

**NOTE:** If the lock is located in the center of the door width, cut lock cable (6) in half and go to Step 3.

**Step 1:** Rotate the inside release handle counter clockwise until it stops. Measure from the top left hole in the handle to the end of the left spring latch.

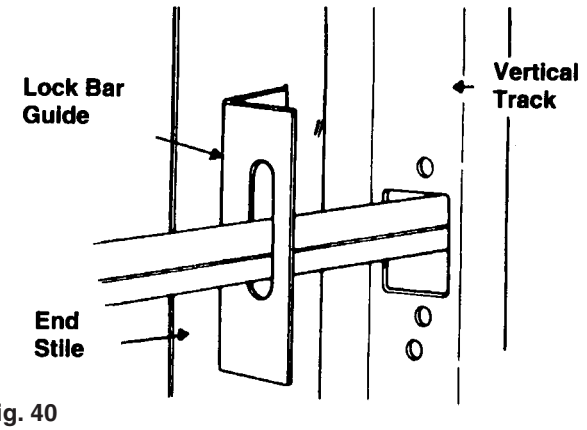

Fig. 40

## #1 Snap Latch

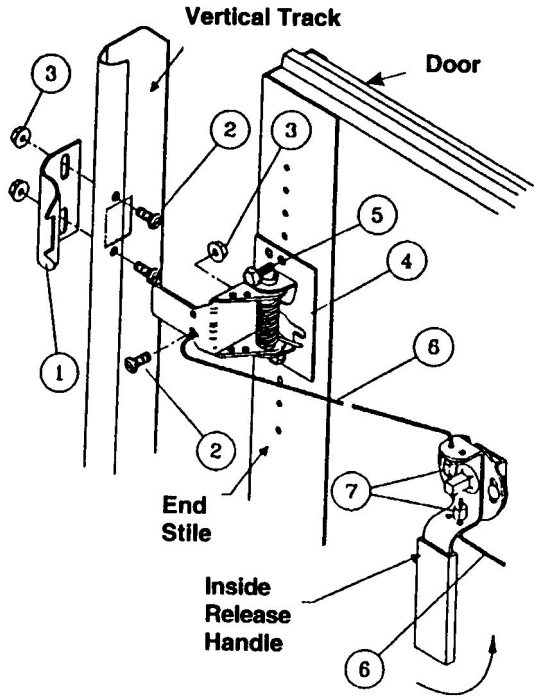


| No. | QTY | DESCRIPTION |
|---|---|---|
| 1 | 2 | Striker Plate |
| 2 | 6 | 1/4" - 20x5/8" Track Bolt |
| 3 | 6 | 1/4" - 20xHex Washer-Hd Nut |
| 4 | 2 | Spring Latch |
| 5 | 4 | #14x5/8" Sheet Metal Screw |
| 6 | 1 | Lock Cable (To Be Cut) |
| 7 | 2 | Cable Stop (Pre-Attached) |

Fig. 41

**Step 2:** Take the lock cable (6) and, using the measurement just obtained, measure from the inside of the cable stop (7) and cut cable.

**Step 3:** Thread the cable through the left hole in the top of the inside release handle from the underside until the stop button comes into contact with the handle. Extend the cable to the left spring latch and feed the end of the cable into the hole as shown, and secure in place with one 1/4" x 5/8" track bolt (2) and 1/4" nut (3).

**NOTE:** Be sure to pull cable taut before securing in place.

**Step 4:** Repeat for other side using the remaining cable and the right hole on the lower part of the handle. Some torsion spring doors only have one cable.

## #2 Slide Bolt

The slide bolt is installed on the inside end stile of the second section using (4) #14 x 5/8" hex head sheet metal screws. The slide bolt rests against the top of one of the rectangular engaging slots in the vertical track. Proper alignment is easier to achieve by using track as a guide. (FIG. 42)

**NOTE:** 3/16" holes may have to be pre-drilled before installing screws.

## Pull Rope (Manually Operated Doors)

**Step 11:** To complete the door section installation, tie the pull rope provided to the bottom roller shaft. (FIG. 43)

**WARNING**

**In order to avoid the risk of strangulation, the pull rope must be removed when installing an electric opener.**

**Step 12:** At this time, remove the 3" nails which were used to hold sections in place prior to installation of the track assembly. (Refer back to FIG. 18).

**NOTE:** Proceed to springing instructions that match your door. If you are installing EZ-Set Extension Spring™ go to next page. If you are installing EZ-Set Torsion Spring™ go to the instructions provided in the spring kit. For Extension Springs go directly to Page 29 and for Torsion Springs go directly to Page 33.

## #2 Slide Bolt

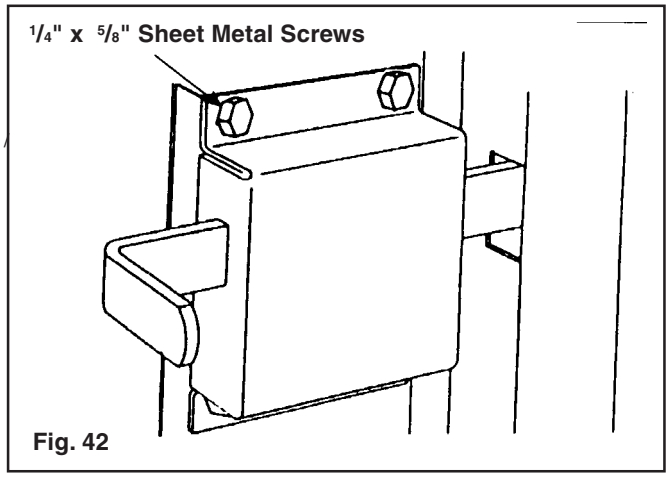

Fig. 42

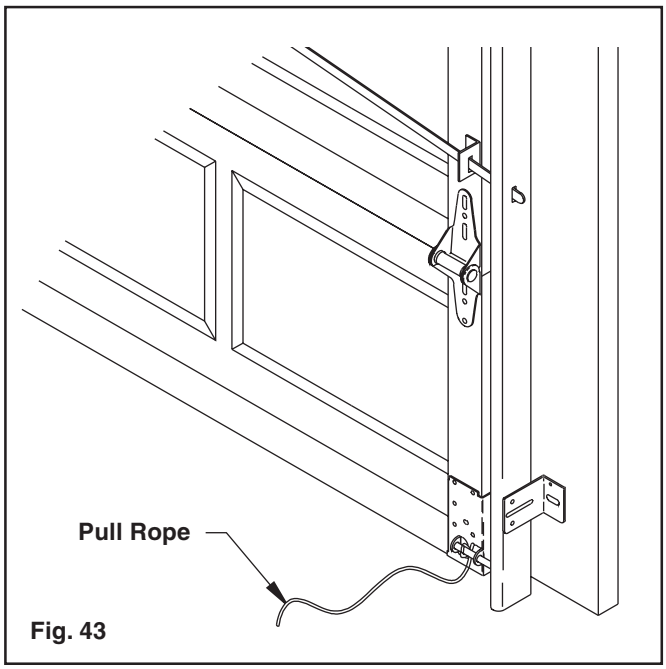

Fig. 43

# Assembling and Installing EZ-Set Extension Spring™

*Use these instructions for the EZ-Set Extenion Spring™ system only.* **Note: DO NOT attach looped ends of lifting cables to bottom brackets of door at this time.**

**MINIMUM SIDEROOM FOR INSTALLATION**

**5½" of sideroom is required for installation of the EZ-Set Extension Spring System™. (Standard extension spring installation requires 3¾" of sideroom.)**

**IF YOU HAVE LESS THAN 5½" SIDEROOM, YOU MUST CONVERT TO EXTENSION SPRINGS**

**If standard extension springs are to be installed in place of the EZ-Set Extension Spring™ Assembly, the following additional parts are required: extension spring lift cables and containment cables (1 pair each note height of door), 3-hole adjustment clip (2), and S-hook (2)**

**Step 1:** Assemble springs with sheaves on the floor. A ⅜" x 1¼ " hex head bolt and ⅜" flange nut are used to attach the sheaves to the sheave fork. Be sure to attach the small black bushing into the sheave fork flange as shown. (FIG. EZ-1)

**Step 2:** Remove the spring system housing from the package and slide it into the housing bracket. The coiled cable will extend through the upper slot in the housing bracket. The "L" and "R" marks on the housing bracket determine the left hand and right hand sides (when viewing the door from the inside of garage looking out). For example, the right hand housing bracket will have the "R" on the top when properly installed on the right hand side with the cable running through the upper slot. (FIG. EZ-2)

**Step 3:** Attach left hand housing assembly to the front of the horizontal angle using two ⅜" x ¾" hex head bolts and ⅜" flange nuts. The ⅜" x ¾" bolt and nut closest to the jamb should also extend through the flag bracket using the first slot on the horizontal angle. The bolt and nut farthest from the jamb should be attached in the second slot of the horizontal angle. Make sure the safety tab on the housing bracket engages the first round hole in the horizontal angle as shown. (FIG. EZ-3)

**WARNING**

**Failure to properly engage safety tab could cause release of spring tension and could result in severe personal injury.**

**I M P O R T A N T!**
**DOOR SHOULD REMAIN IN CLOSED POSITION DURING EZ-SET SPRING™ INSTALLATION!**

## Tools Needed

- Electric Drill (reversible recommended)
- Socket wrench kit

| | |
|---|---|
| ¼" hex driver (included) | 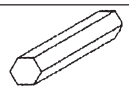 |

**EXTENSION SPRING ASSEMBLY**

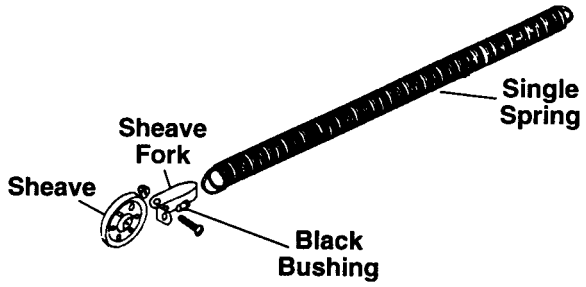


Fig. EZ-1

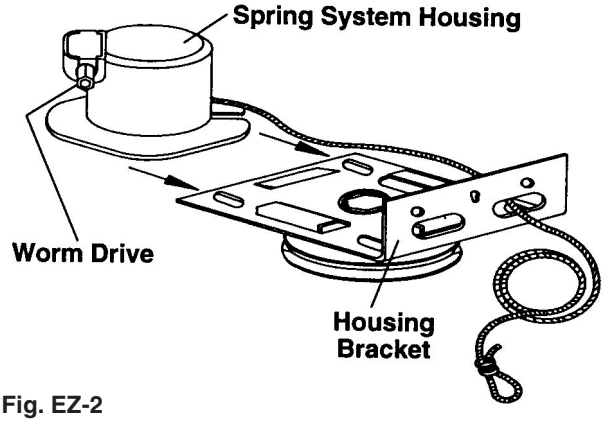


Fig. EZ-2

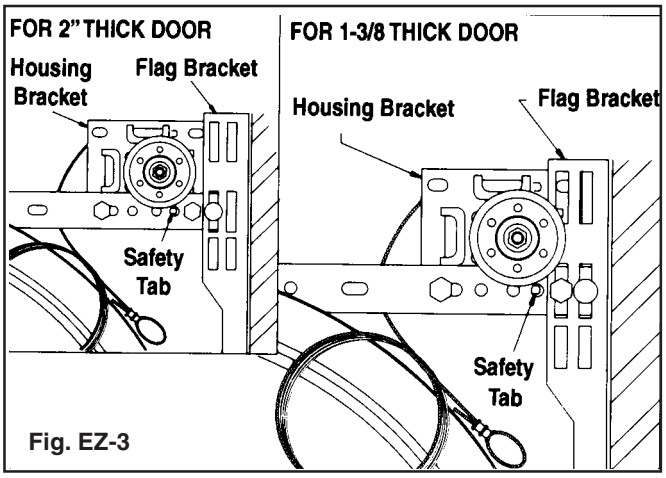


Fig. EZ-3

**Step 4:** Assemble one 5/16" eye bolt with one 5/16" flange nut on each side of the rear track hanger. The eye bolts should be about 12" above the track to keep the spring assembly from dragging on the track. The eye bolts can be as low as 4" above the track if you have limited headroom. Tighten the 5/16" flange nuts. (FIG. EZ-4)

**REPEAT STEP 5 THROUGH STEP 8 FOR BOTH SIDES OF DOOR.**

**Step 5:** Hook one end of an extension spring over the 5/16" eye bolt and allow to hang down temporarily. Attach a sheave fork assembly on the free end of the spring. Locate safety containment cable and run looped end through the extension spring and over the eye bolt. Feed free end of safety containment cable through the black bushing installed on the flange of the sheave fork and into key slot on the housing bracket. Pull the safety containment cable taut and clamp in place with a #14 x 5/8" sheet metal screw. Make sure sheet metal screw is tightened so that safety containment cable cannot slip through hole. (FIG. EZ-5 & 6).

**WARNING**

**Garage door springs can cause serious injury and property damage if they break under tension and are not secured with safety cables.**

**Step 6:** Thread the looped end of the lift cable that is coming out of the black housing and run under and around the spring sheave, and then over and around the stationary sheave affixed to the back of the housing bracket. (FIG. EZ-7)

**Step 7:** Run looped end of lift cable down the side of the door between the door and track brackets. Attach loop of lift cable to the button on the bottom bracket of the door. (FIG. EZ-8)

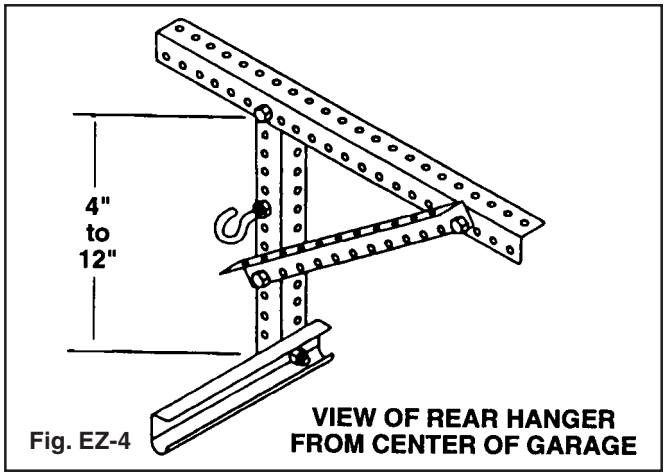

Fig. EZ-4

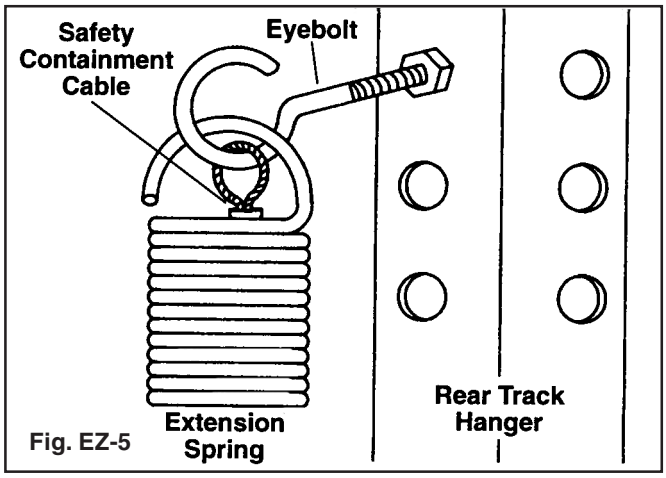

Fig. EZ-5

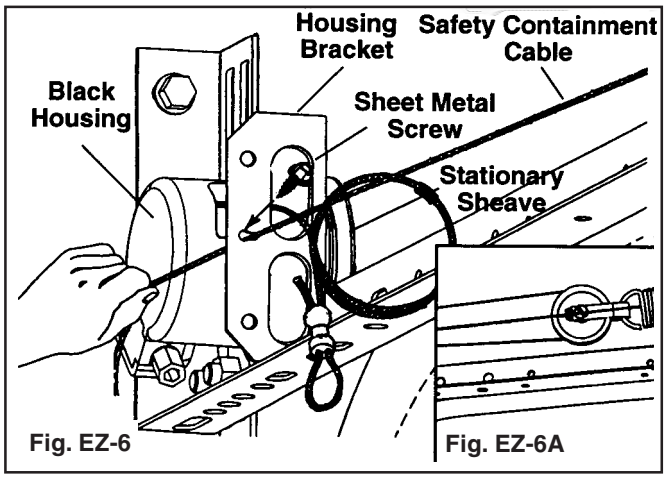

Fig. EZ-6 Fig. EZ-6A

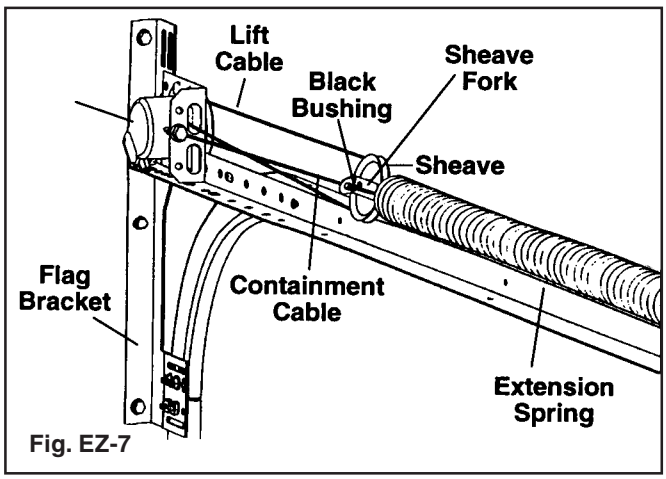

Fig. EZ-7

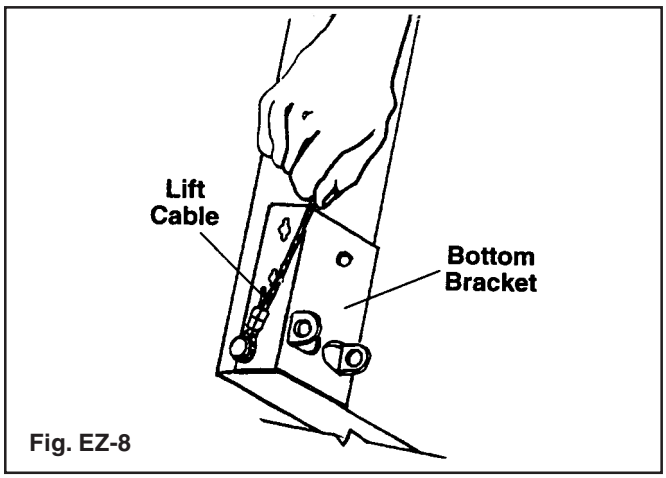

Fig. EZ-8

**IMPORTANT: MAKE SURE DOOR IS LOCKED BEFORE TENSIONING THE SPRINGS.**

**Step 8:** Wind the worm drive on the black housing with a standard 3/8" drill using the 1/4" hex driver provided. Make sure 1/4" hex driver is inserted completely into the worm drive. The spring is tensioned by operating the drill in the forward (clockwise) direction. (FIG. EZ-9)

**WARNING**

**Keep your head well below the track when spring is under tension or being tensioned as springs are dangerous when fully or partially wound.**

Wind both springs until the black bushing installed on the flange of the sheave forks covers the red marks on the safety cables. The springs may need more or less tension to correctly balance the door weight. **A properly balanced door takes an equal amount of force to lift the door as it does to lower the door.** (FIG. EZ-10)

**Step 9:** To check spring tension, carefully raise the door about halfway open. Check to be sure the horizontal tracks are parallel with each side of the door. With the door about halfway open, make sure the gap between the edge of the door and track does not exceed ½". If adjustment of the rear track hangers is necessary, lower the door first and remove all tension from both springs using the instructions in Step 10 for decreasing spring tension. (FIG. EZ-11)

**WARNING**

**This is the first time the door is being opened. If the tracks are not correctly aligned or the rear track hangers are not strong enough, the door may fall. Proceed slowly and carefully.**

**Step 10:** If the door wants to drift downward, more spring tension is required; if the door wants to lift open, less spring tension is required.

**To increase spring tension:** Insert the 1/4" hex driver completely into the worm drive using the forward (clockwise) direction on the drill. Increase tension on the springs only a few inches at a time.

**To decrease spring tension:** Insert the 1/4" hex driver completely into the worm drive using the reverse (counterclockwise) direction on the drill.

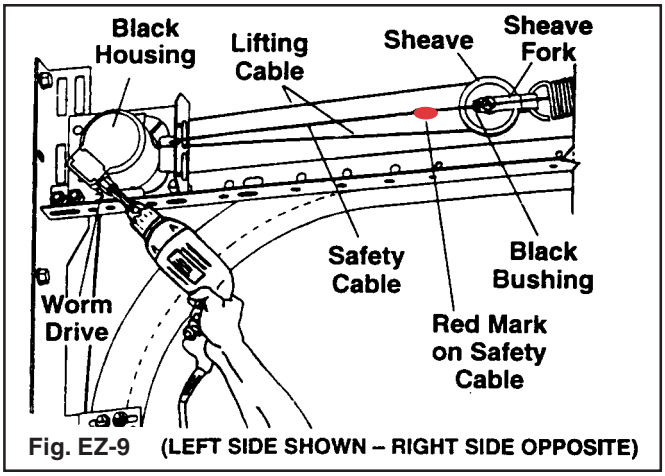

Fig. EZ-9 (LEFT SIDE SHOWN – RIGHT SIDE OPPOSITE)

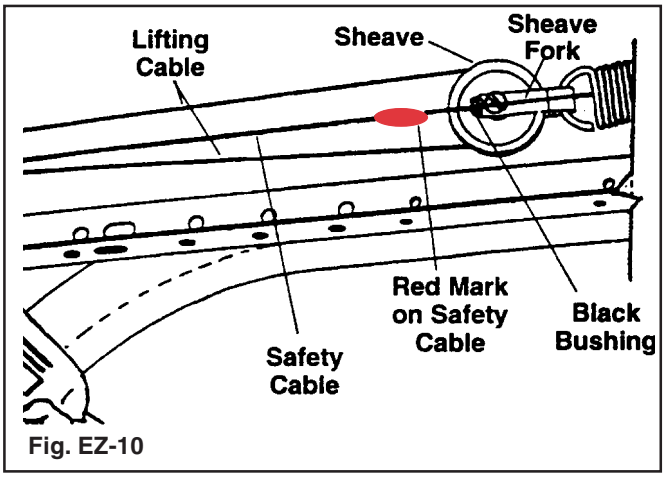

Fig. EZ-10

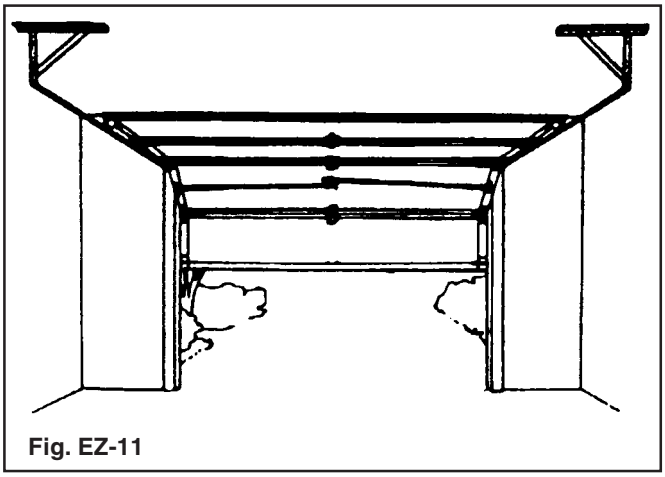
Fig. EZ-11

**IMPORTANT:**
**Both springs should be adjusted equally for proper operation.**

**Step 11:** Carefully raise the door to fully open position and check again to be sure the horizontal tracks are parallel with the edges of the door.

Your EZ-Set Spring™ installation is now complete.

# Assembling and Installing Extension Springs

*Use these instructions for Extension Springs only.*

**Step 1:** Some doors will be supplied with two springs and some will have four. Assemble springs with sheaves on the floor. It is easier to attach the spring to the eye bolt and then attach sheave assembly. A 3/8" x 1 1/4" bolt and nut are used to attach the sheave. (FIG. EXT-1)

**NOTE:** If your door was supplied with four extension springs, take notice of the color coding on the ends of the springs. If there are two color codes, be sure to use one of each on either side so that the spring tension is equal on both sides.

**Step 2:** Attach a sheave in the third hole on the angle approximately 4 inches from the wall on both sides. Use a 3/8" x 1 1/4" bolt, 3/8" washer and nut. The head of the bolt must be on the door side. (FIG. EXT-2)

**Step 3:** Attach the eye bolts with one 5/16" nut on each side of the rear hanger. The eyebolts should be about 12 inches above the track to keep the spring assembly from dragging on the track. The eyebolts can be as low as 4 inches above the track if you have space problems. Tighten the eyebolt nuts. (FIG. EXT-3)

**Step 4:** Carefully raise the door and prop it about halfway open. (FIG. EXT-4)

**WARNING**

**This is the first time the new door is being opened. If the tracks are not correctly aligned or the back hangers are not strong enough the door may fall. Also, the door will be very heavy without the help of the springs. Have two or more people help you. Proceed slowly and carefully.**

Check to be sure the horizontal tracks are parallel with each side of the door. With the door about halfway open, make sure the rollers do not come out of the top brackets more than about 1/2". If adjustment of the rear hangers is necessary, lower the door first because the weight of the door is supported by the rear hangers.

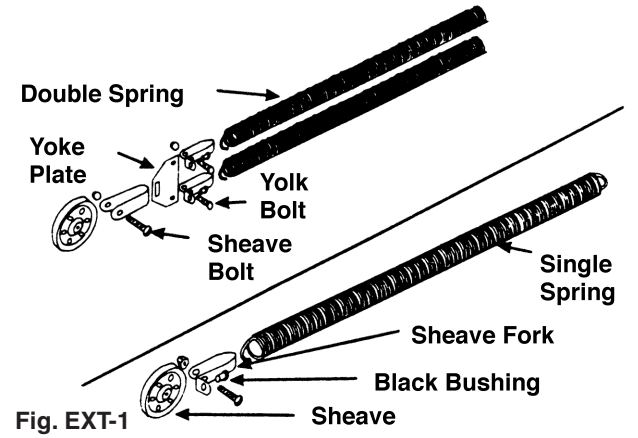

Fig. EXT-1

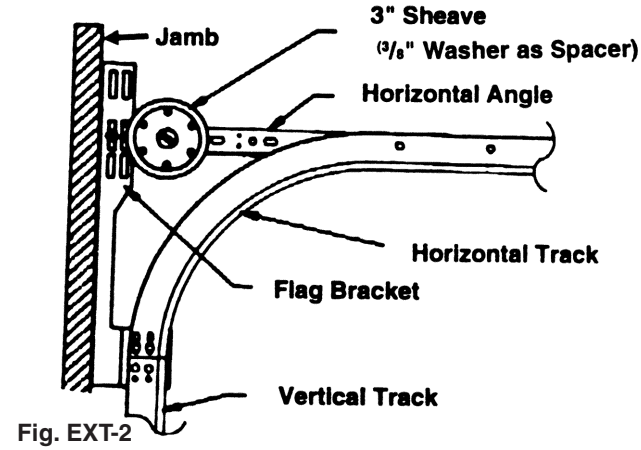

Fig. EXT-2

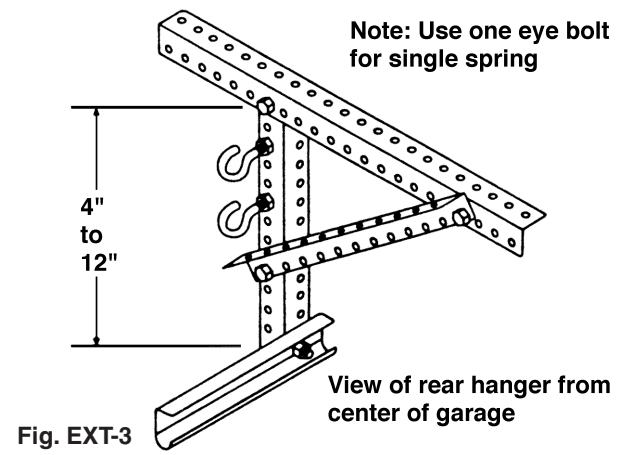

Fig. EXT-3

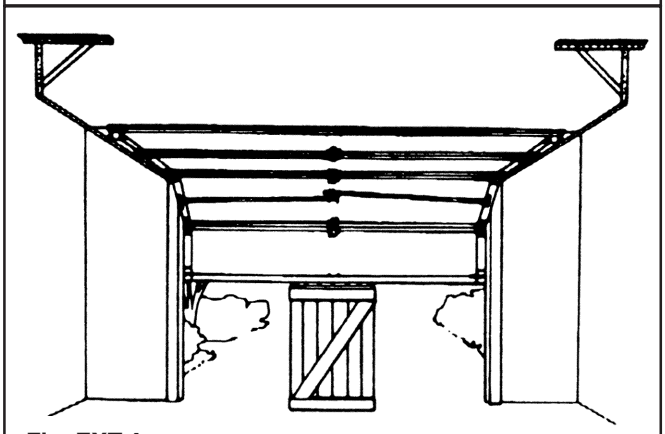
Fig. EXT-4

**Step 5:** Carefully raise the door to fully open position. Place “C” clamps on both sides of the track below the bottom rollers to keep the door from falling closed. (FIG. EXT-5)

Check again to be sure the horizontal tracks are parallel with the edges of the door. The rollers must not come out of the hinges or brackets.

**Step 6:** Hook the ends of the springs over the eyebolts at the rear track hangers.

Attach the loop of a cable over the button on the bottom bracket, if not done so already. Thread the cable up over the stationary sheave. (FIG. EXT-6)

Continue the cable over and around the sheave on the springs. (FIG. EXT-7)

**Step 7:** Tie the cable to the three hole adjusting clip exactly as shown in FIG. EXT-8A. Hook the cable to the horizontal angle with an “S” hook. Adjust the knot at the three hole adjusting clip. Adjust so that all spring tension is relieved and the cable holds the springs above the horizontal track. The springs should be stretched the same on both sides of the door. (FIG. EXT-8A)

**Important:** Attach the warning tag found in the white envelope with orange print to the spring assembly (this tag may already be attached). (FIG. EXT-9)

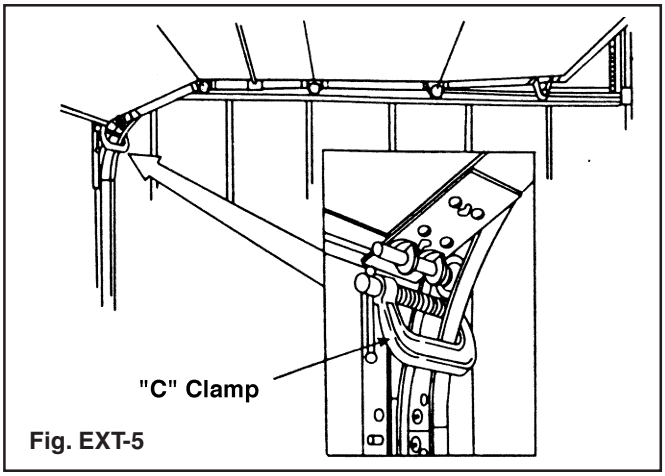

Fig. EXT-5

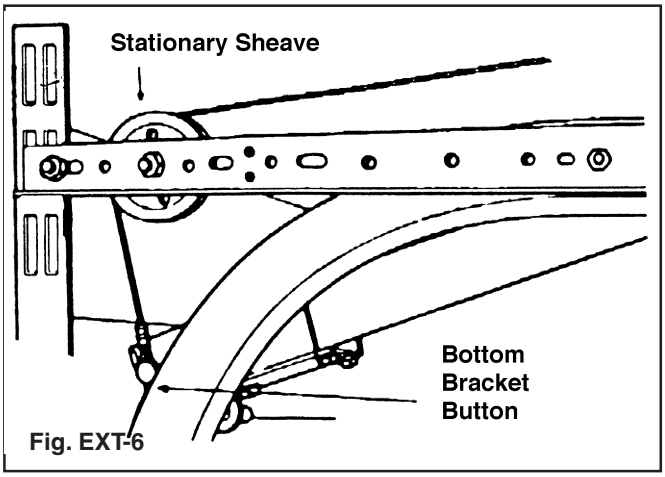

Fig. EXT-6

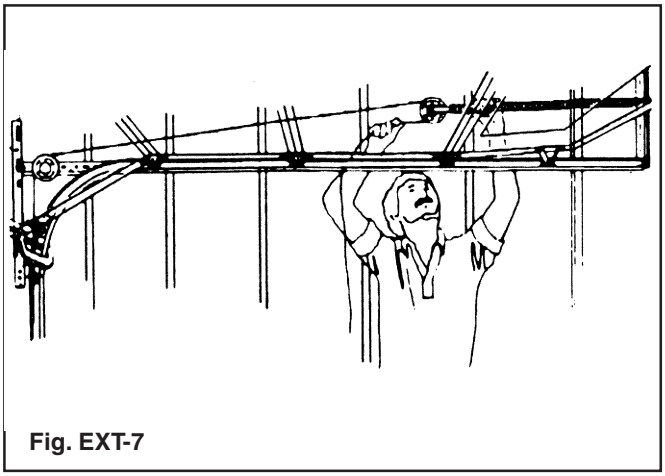
Fig. EXT-7

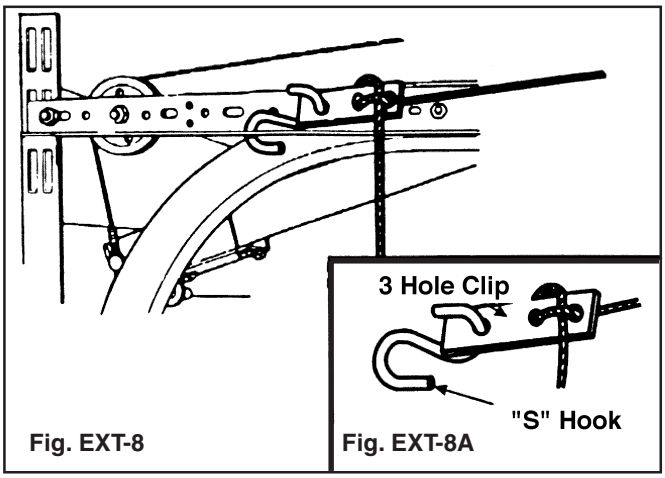

Fig. EXT-8

Fig. EXT-8A

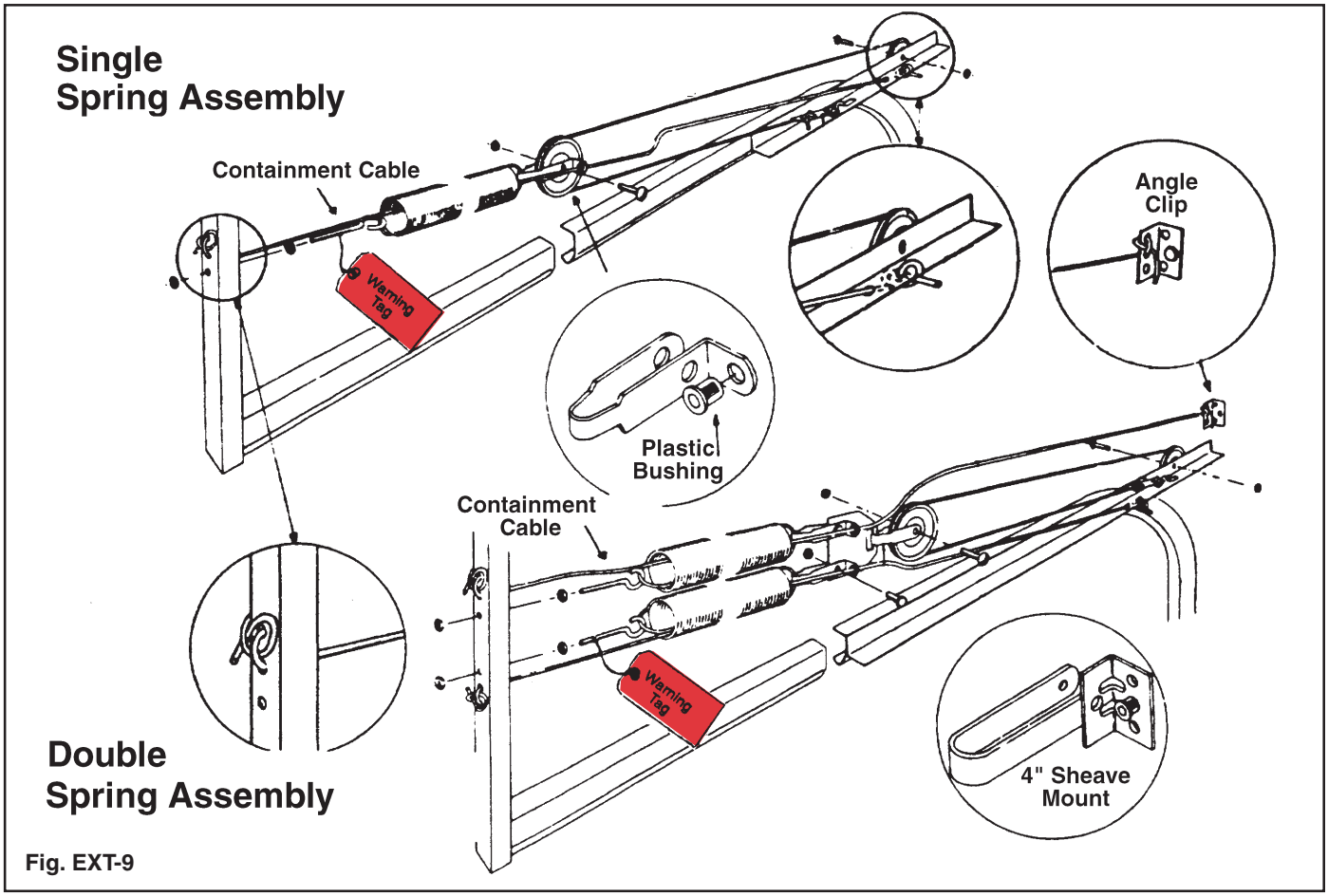

Fig. EXT-9

# Installing Safety Containment Kit

**WARNING**

**Garage door extension springs can cause serious injury and property damage if they break under tension and are not secured with safety cables. Do not neglect the following step.**

**Step 8:** Tie one end of the 1/8" containment cable to the rear track hangers. Tie the cable as shown in the illustration (FIG. EXT-9). Thread the cable through the center of the extension spring and through the bushing in the sheave fork. Tie the remaining end to the horizontal angle as shown. This must be done for each of the springs.

**NOTE:** If your door has four extension springs, tie the upper containment cable to an angle clip mounted to the jamb. (FIG. EXT-9)

# Torsion Spring Installation

| Winding Chart | |
|---|---|
| Door Height | Spring Turns |
| 6'0" | 6.75 |
| 6'3" | 7.00 |
| 6'6" | 7.25 |
| 6'9" | 7.50 |
| 7'0" | 7.75 |
| 7'3" | 8.00 |
| 7'6" | 8.25 |
| 7'9" | 8.50 |
| 8'0" | 8.75 |

**Number of turns on the spring can be counted by drawing a chalk line on them. Doors with two springs are wound the same number of turns on each spring.**

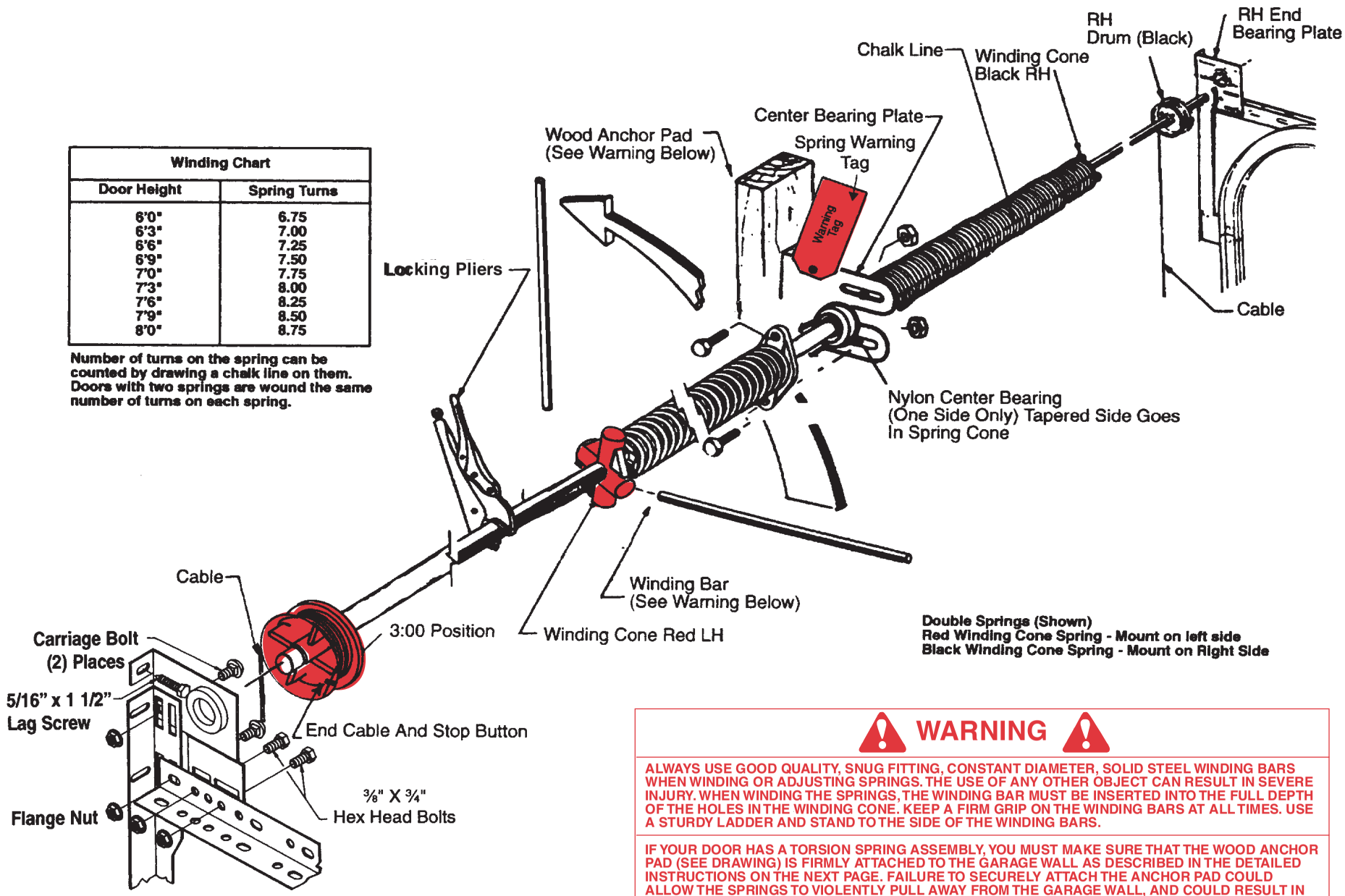


**Double Springs (Shown)**
**Red Winding Cone Spring - Mount on left side**
**Black Winding Cone Spring - Mount on Right Side**

Fig.TOR-1

## WARNING

ALWAYS USE GOOD QUALITY, SNUG FITTING, CONSTANT DIAMETER, SOLID STEEL WINDING BARS WHEN WINDING OR ADJUSTING SPRINGS. THE USE OF ANY OTHER OBJECT CAN RESULT IN SEVERE INJURY. WHEN WINDING THE SPRINGS, THE WINDING BAR MUST BE INSERTED INTO THE FULL DEPTH OF THE HOLES IN THE WINDING CONE. KEEP A FIRM GRIP ON THE WINDING BARS AT ALL TIMES. USE A STURDY LADDER AND STAND TO THE SIDE OF THE WINDING BARS.

IF YOUR DOOR HAS A TORSION SPRING ASSEMBLY, YOU MUST MAKE SURE THAT THE WOOD ANCHOR PAD (SEE DRAWING) IS FIRMLY ATTACHED TO THE GARAGE WALL AS DESCRIBED IN THE DETAILED INSTRUCTIONS ON THE NEXT PAGE. FAILURE TO SECURELY ATTACH THE ANCHOR PAD COULD ALLOW THE SPRINGS TO VIOLENTLY PULL AWAY FROM THE GARAGE WALL, AND COULD RESULT IN SEVERE INJURY AND/OR PROPERTY DAMAGE. IN NO CASE SHOULD NAILS BE USED.

# Torsion Spring Installation

## (For EZ-Set Torsion Spring™, See Supplemental Instructions)

### PRECAUTIONS

**WARNING**

**Torsion springs can be very dangerous if they are improperly installed or mishandled. Do not attempt to install them yourself unless 1) you have the right tools and reasonable mechanical aptitude or experience and 2) you follow these Instructions very carefully.**

Tools Required for Torsion Spring Installation:
1. Drill
2. 3/16" drill bit
3. Two 9/16" box wrenches
4. 7/16" socket wrench
5. 3/8" box wrench
6. Two 1/2" diameter, 18" long cold rolled solid steel winding bars (NOTE: Winding bars are available at most hardware stores)
7. Locking pliers

### Step 1

**It is important that the torsion spring assembly be firmly and securely attached to the frame of the garage.**

Refer to Figure 8, page 13 for the configuration of 2"x 6" wood jambs. **Important:** The wood anchor pad must be made of a Grade 2 or better Southern Yellow Pine (also known as Southern Pine or Yellow Pine). The Southern Yellow Pine must be free of splits and cracks. **Do not use wood labelled as Spruce Pine Fir (or SPF).**

Each side jamb and the center anchor pad should extend 12" above the top of the opening for 12" radius horizontal track and 15" above the top of the opening for 15" radius horizontal track.

The wood anchor pad must be installed into the frame of the garage with at least four 3/8" x 4" long lag screws (one at each corner). The four lag screws must be installed no closer than 1 1/2" from the sides and the ends of the 2 x 6. These lag screws must fasten into the wood frame of the garage, not the drywall or sheet rock. The wood anchor pad and 3/8" x 4" lag screws are not supplied. **Do not use nails.**

**NOTE:** The wood anchor pad can be off-center to the width of the opening by up to 10" in either direction.

### Step 2

Lock the door in the down position securely. This must be done to prevent the door from prematurely opening which could cause an injury!

**NOTE:** You need an assistant in Step 4. If your garage has only one entrance, be sure you, the assistant, and the tools you need are inside before you lock the door. Your door will have either one or two torsion springs. Each torsion spring consists of spring coils, stationary cone, and a winding cone (FIG. TOR-1). The spring coils are color coded depending on the spring size and the **winding cone** is color coded separately, either **red** or **black**. The color on the winding cone is to help identify on which side of the door the spring is to be used.

**Black winding cone torsion springs are used on the right side of the door and red winding cone torsion springs are used on the left side of the door when viewing the door from the inside looking out. Failure to install the torsion springs on the correct side will cause your door to function improperly and could result in serious injury. (NOTE: If you have low headroom, these instructions DO NOT APPLY. Consult supplemental low headroom instructions.)**

Slip the torsion springs onto the spring tube. The **red** winding cone on the **left** end, the nylon center bearing, center bearing plate, and the **black** winding cone torsion spring on the **right** end. (FIG. TOR-2) Cable drums go on next. The **red** drum on the left, **black** drum on the right. The set screws on the drums face the springs.

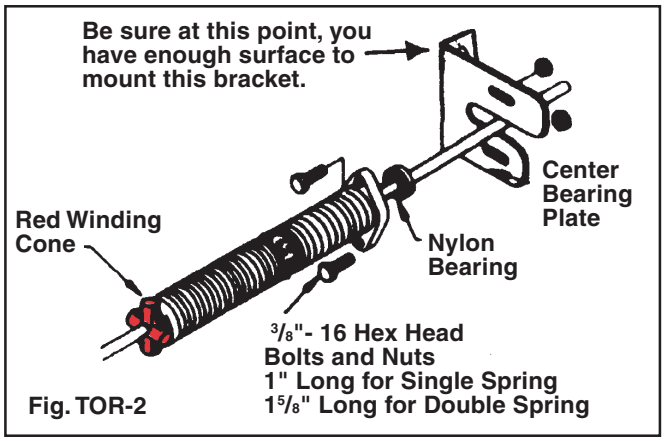

Fig. TOR-2

## Step 3

Fasten the bottom of the end bearing plate to the horizontal angle with (2) 3/8" x 3/4" long hex head bolts and hex nuts. The bottom of the end bearing plate is identified by two parallel rows of two slots. Please make sure to use the bottom two slots for 12" radius horizontal track, and the upper two slots for 15" radius horizontal track. When properly mounted the torsion tube is level and straight. (FIG. TOR-3)

**Before installing any lag screws, it is important to drill 3/16" pilot holes where the lag screws are to be attached.** Fasten the wall flange on the end bearing plate to the wood jamb with (1) 5/16" x 1 5/8" long lag screw. Drill 3/16" pilot holes where lag screws are to be installed. On 12" radius horizontal track, each end bearing plate should also be attached with 3/8" x 3/4" carriage bolts and 3/8" nuts. (FIG. TOR-3)

## Step 4

With an assistant, lift the complete torsion spring tube assembly and slide the ends of the tube into the bearing on the end bearing plates. With the tube level, mount the center bearing plate to the center anchor pad using (2) 5/16" x 1 5/8" long lag, red-coated screws.

**NOTE:** Red coated fasteners must be installed for the attachment of center bearing plate to indicate this part will be under extreme tension once spring is wound. (FIG. TOR-4)

Before mounting the center bearing plate, drill (2) 3/16" pilot holes for the lag screws. These pilot holes must be no closer than 1 1/2" from the sides and ends of the wood anchor pad. The center bearing plate resists the considerable counter torque of the springs. This wood anchor pad must be installed to the frame of the garage as stated in **Step 1.**

## Step 5

The cable that is attached to each bottom bracket is brought up between the wall and roller shafts to the cable drum. This cable is placed in the notch on the cable drum. Turning the cable drum and sliding it up tight against the end bearing plate removes the cable slack. **Make sure the cable follows the groves in the cable drum.** The set screws on the cable drum should be tightened with a 3/8" box wrench while holding the cable taut. Locking pliers clamped to the torsion spring tube maintain tension on the cable. (FIG. TOR-1) This procedure should be repeated on the opposite side.

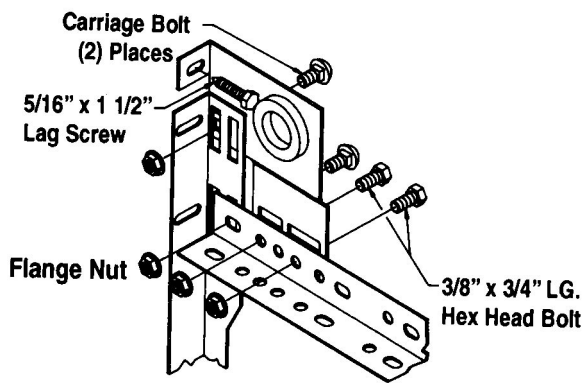


Fig. TOR-3

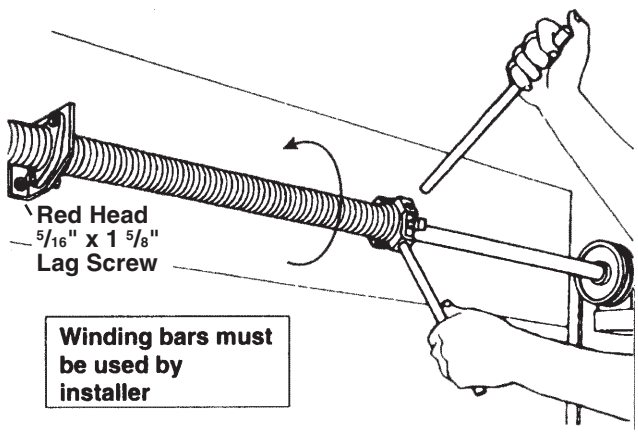


Fig. TOR-4

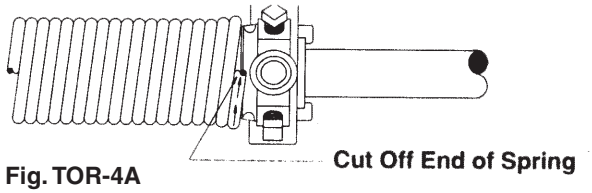


Fig. TOR-4A

## Step 6

Draw a chalk line across the spring(s). This will be used to indicate the number of turns on the spring(s). After inserting the two winding bars all the way into the winding cone, wind the springs 1/4 turn at a time in an upward direction as shown in FIG. TOR-4. The number of turns is shown in the table in FIG. TOR-1. The tail of the torsion spring coil points in the direction that the spring is wound. (FIG. TOR-4A)

**WARNING**

**NEVER use screwdrivers or other substitutes for winding bars! Stand to the side of bars. Be sure to insert the bars all the way into the hole.**

Secure each spring with the set screws on the winding cone. (**Caution:** Set screws should be turned from 3/4 to one full turn after they have made contact with the tube.) On doors with two torsion springs, each torsion spring should be wound the same number of turns. Remove the locking pliers.

### Step 7

Unlock the door, slowly raise the door and prop it about halfway open.

**WARNING**

**This is the first time the new door is being opened. If the tracks are not correctly aligned or the back hangers are not strong enough, the door may fall. Proceed slowly and carefully.**

Check to be sure the horizontal tracks are parallel with each side of the door. Make sure all the lag screws are securely fastened. With the door about halfway open, make sure the rollers do not come out of the top brackets more than about 1/2 inch. If adjustment of the rear track hanger is necessary, the door must be locked in the closed position because the weight of the door is supported by the rear hangers.

**NOTE:** If the torsion springs do not increase in tension as the 1/4 turns are added to the springs, then you probably have the torsion springs reversed. (See **Step 2.**)

### Step 8

To adjust torsion spring tension, the door is locked in the down position. With locking pliers clamped on the torsion tube, winding bars are used to wind the springs tighter to increase tension. Tension is reduced by removing turns. When two springs are used, both sides should be adjusted the same. Adjustments should be made in 1/4 turn increments.

**WARNING**

**NEVER adjust center bearing plate or red-coated fasteners after springs are wound. Be prepared to handle a strong force when reducing tension on a torsion spring. Use winding bars only, and stand to the side.**

# Maintenance/Adjust./ Options

## Checking & Adjusting the Door

**The door should open and close easily.** With proper adjustment the door will hang into the opening 4" to 6". An electric opener can be adjusted so the door is pulled completely even with the opening. If the door is difficult to open but falls closed, more spring tension is required. If the door opens by itself and is difficult to close, less spring tension is required.

**To adjust EZ-Set Extension Spring™ tension** insert 1/4" hex driver completely into the worm drive and use the reverse (counterclockwise) direction on the drill to remove tension and the forward (clockwise) direction to increase tension.

**To adjust extension spring tension,** use two "C" clamps to carefully clamp the door in the open position. Tension can be changed by moving the "S" hooks to different holes in the horizontal track angles or by adjusting the cable in the three hole clip. Both sides must be adjusted equally. Moving the hooks closer to the door opening increases tension.

Tension can also be adjusted slightly by releasing spring tension and relocating the eyebolts higher on the track hanger. When reinstalling, the higher the eyebolt, the greater the tension.

**WARNING**

**Use extreme care when readjusting extension springs and make sure that the door is carefully secured by "C" clamps in the open position before you begin. When the door is closed, the springs and mounting hardware are under extreme tension and are potentially dangerous.**

Binding of the door near closed and/or open position requires the track positioning to be checked. The track can be moved away from the door by adjusting the jamb or flag brackets. Care must be taken that the rollers remain in the hinges and do not come out of top roller brackets. Binding can also occur if the molding is attached too tightly against door. The door stop molding should

be repositioned lightly against the door. Allow the thickness of a dime between the door stop molding and the door.

**Do not attempt to adjust or repair torsion springs. You may not be prepared to handle the release of spring forces. Call a professional door service company for repairs or adjustments.**

# Maintenance

**IMPORTANT: REFER TO THE SAFETY INFORMATION ON PAGES 3 & 4 BEFORE ATTEMPTING ANY MAINTENANCE OR REPAIRS.**

## Cleaning the Door

In order to prevent damage (rusting) caused by foreign matter adhering to the door, the door should be cleaned at least twice a year. The door should be wiped down with a mild household detergent and rinsed with clear water.

Annually do the following:

## Lubrication

Lubricate all moving parts of the door with light household oil, including:

- Lift cables at the bottom bracket button,
- Bearing of the sheaves,
- Lock hardware where surfaces turn or slide,
- Full length of torsion spring to reduce friction between coils,
- Lubricate steel rollers. **DO NOT** lubricate nylon rollers.

## Check door hardware

1. Check for loose or bent hinges.
   - Tighten loose hinges.
   - Straighten or replace bent hinges.

   **Caution:** To replace bent hinge(s) or broken roller(s):

   A) Door must be locked and in the down position.

   B) No more than one hinge is to be removed from the door at any given time.

   C) Under no circumstances should you loosen or remove the bottom bracket without disengaging the spring tension. (Follow instructions on page 11 for removing extension springs.)

2. Check roller for broken wheels, bent shafts, or worn out bearings.

3. Check the door and track supports for loose or missing bolts, screws, etc., and tighten. Be careful not to overtighten.

4. Check the extension cables. Are they running properly in the sheaves? Check for wear of the cable at the bottom bracket button.

5. Check for bent track. If bent, call an authorized professional dealer.

6. Extension spring hardware (see page 7) which includes springs, cables, sheaves, sheave forks, bottom brackets, and containment cables should be adjusted or repaired only when the spring tension is released (the door must be open), and these repairs should be made by a qualified door technician or a mechanically experienced person with proper tools and instructions.

7. If your door has torsion springs (see page 6), the spring assembly and wood anchor pad should only be adjusted or repaired by a professional door technician.

# Replacement Parts

Replacement parts are available from an authorized professional dealer or a building supply retailer.

When ordering repair parts, always provide the following: part name, model number, and door width and door height (W x H).

For the location of the authorized professional dealer or a building supply retailer nearest you, please write or call:

Clopay Building Products
Consumer Services Dept.
312 Walnut St., Ste. 1600
Cincinnati, OH 45202-4036 USA

Call Toll Free:1-800-225-6729
Hours of Operation (EST):
Monday – Friday, 8:30 AM - 8 PM
Saturday 8:30 AM - 5 PM.

# Attaching an Automatic Opener

**WARNING**

**To avoid risk of strangulation or personal injury to children, if your door has a pull down rope, you must remove the pull down rope when you install an automatic garage door opener.**

**IMPORTANT:** When installing an automatic garage door opener, make sure to follow the manufacturer's installation and safety instructions carefully. **Do not install the pull down rope when attaching an automatic opener. The lock should be removed or disengaged to prevent damage to the door.** If attaching an operator bracket to the wood anchor pad, make sure the wood anchor pad is free of cracks and splits and is firmly attached to the wall. Always drill pilot holes before attaching lag screws. (See Page 14)

To avoid damage to your door, you must reinforce the top section of the door in order to provide a mounting point for the opener to be attached. **Failure to reinforce the door, as illustrated, will void your Clopay warranty.**

**Opener Rail Mounting Distance**

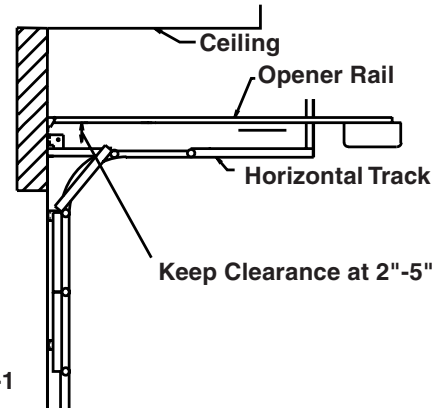


**Fig. AO-1**

**Opener Arm Attachment to Vertical Angle**

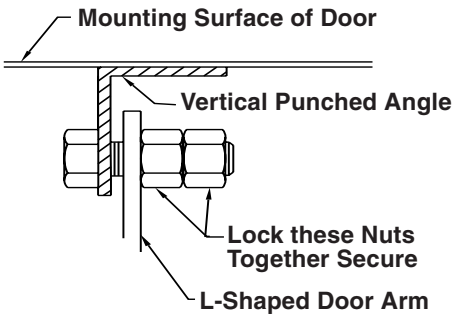


**Fig. AO-2**

You will need a 1¼" x 1¼" minimum punched angle at least 13 gauge or 3/32" thick from your local hardware or building supply store. This punched angle ties in to reinforcing plates built in the door. These will be located directly under the pre-punched holes. The angles may need to be trimmed to fit the reinforcement holes and/or section height. Proper attachment requires #14 x ⅝" sheet metal screws and at least two reinforcing plates being used. (FIG. AO-3 - AO-6)

The operator arm will usually be attached to the vertical angle at roughly the same height as the top roller of the door. Attach the opener arm directly to the punched angle. To prevent the top of the door from bending, the opener rail should be mounted no less than 2" or greater than 5" from the high arc of the door travel. (FIG. AO-1)

For attachment of the opener arm to vertical angle iron, use one ⅜" x ¾" bolt and two ⅜" nuts tightening one nut against the other to prevent the nuts from loosening on the bolt. Do not tighten the nuts against the opener arm (opener arm must be allowed to rotate freely.) (FIG. AO-2)

**IMPORTANT: Use only the pre-punched holes in reinforcing the top section, as improper fastener location may result in damage to the door or operator.**

**NOTE:** An opener bracket kit specifically designed for opener attachment may be included or can be purchased as an option (silver galvanized or white powder coated). Instructions are provided with kit.

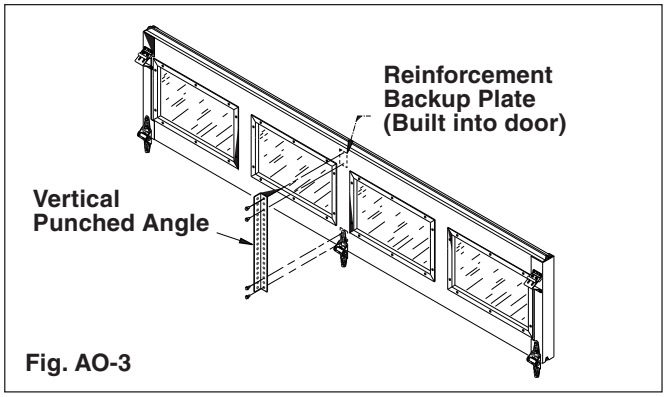


**Fig. AO-3**

**8'0" Up To 9'10" Wide Doors-Solid (Or With Windows)**

Punched Angle – One 18" or 21" long piece (measure top section height). A horizontal angle is not required.

**NOTE:** All reinforcing angles are to be attached with #14 x ⅝" sheet metal screws at the reinforcement back-up plate locations. (FIG. AO-3 – AO-6)

**Torsion Spring Doors**
A) Install operator draw bar to one of the vertical punched angles. It will be necessary to mount the operator off center of door, to align with the vertical angle; or B) Install operator draw bar to the horizontal punched angle. (See FIG. AO-5)

**Extension Springs**
Install operator draw bar to the horizontal punched angle. (See FIG. AO-5)

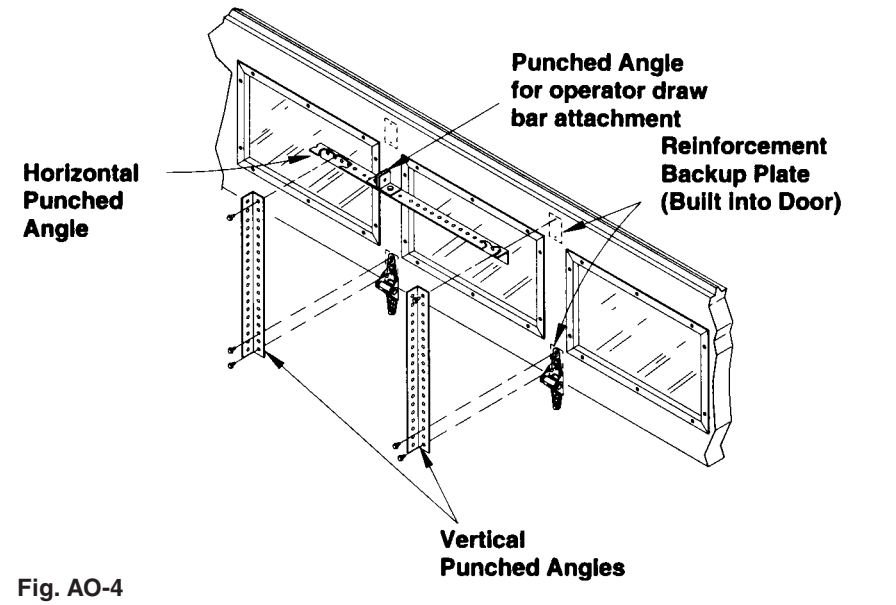

Fig. AO-4

**10'0" Up To 15' Wide Door**
**Solid (Without Windows) or with Windows**

Punched Angle – One 27" long piece (12' Wide Doors require one 50" long piece) and two 18" or 21" long pieces (measure top section height).

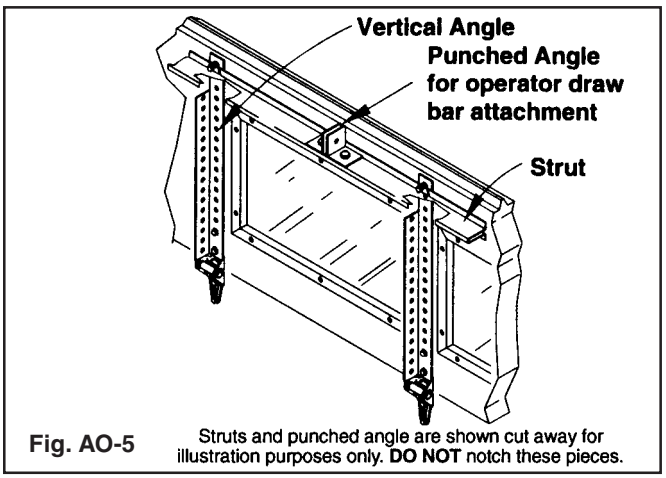

Fig. AO-5 Struts and punched angle are shown cut away for illustration purposes only. **DO NOT** notch these pieces.

**15'2" Up To 15'10" & 19' to 19'10"**
**Wide Doors with Struts***
**1⅜" Thick Doors† - Solid or with Windows**

Punched Angle – Two 18" or 21" long pieces (measure top section height). *Strut supplied.

**NOTE:** Doors with struts will require the top portion of angle notched out as shown to allow other leg of angle to be mounted under steel strut. (FIG. AO-5)

**Torsion Spring Doors -** Install operator draw bar to one of the vertical punched angles. It will be necessary to mount the operator off center of door, to align with the vertical angle. (See FIG. AO-5)

**Extension Springs -** Install operator draw bar to the strut with the bracket provided with the operator or cut two pieces of punched angle and mount to strut as shown with ¼-20 hex bolts and nuts. (FIG AO-5)

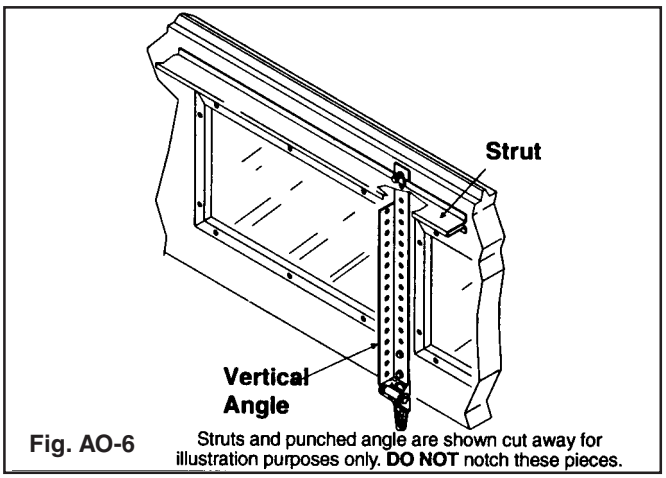

Fig. AO-6 Struts and punched angle are shown cut away for illustration purposes only. **DO NOT** notch these pieces.

**16' Up To 18'10" & 20' Wide Doors with Struts***
**1⅜" Thick Doors† - Solid or with Windows**

Punched Angle – One 18" or 21" long piece (measure top section height). *Strut supplied.

**NOTE:** Doors with struts will require the top portion of angle notched out as shown to allow other leg of angle to be mounted under steel strut. (FIG. AO-6)

**†2" Thick Doors**
**If your 2" thick door requires struts, follow the instructions for the same size 1⅜" thick door. For 2" thick doors with no struts, proceed with attachment of vertical angle as illustrated. (FIG. AO-5 & AO-6) Refer to page 16 of this manual for the type and number of struts needed for your door.**

# Painting and Windows

## PAINTING

**Cleaning:** Before painting your door, it must be free of dirt, oils, chalk, waxes and mildew. The prepainted surfaces can be cleaned of dirt, oils, chalk and mildew with a diluted solution of trisodium phosphate. Trisodium phosphate is available over the counter at most stores under the name SOILAX®, in many laundry detergents without fabric softener additives, and in some general purpose cleaners. Check the label for trisodium phosphate content. The recommended concentration is ⅓ cup of powder to 1½ to 2 gallons of water. After washing the door, always rinse well with clear water and allow to dry.

If the door has ever been waxed, the wax must be removed before painting. Doors are not waxed during the manufacturing process. This can be accomplished by wiping the door surface with a rag saturated with Xylene (Xylol), available at most paint or hardware stores. Wiping should be done at moderate pressure and Xylene must not be allowed to sit on the door for an extended time. Damage to your door's paint system can occur if overexposed to this or other solvents.
**Caution:** Safety instructions on the solvent's container must be followed. After de-waxing the door, clean with trisodium phosphate, as stated previously.

**NOTE:** Sanding could remove rust-inhibiting compounds, therefore, sanding should be done only to damaged areas where bare metal has been exposed. Refer to the **"Repair"** section of these instructions.

**Repair:** Should your door's paint finish become damaged, exposing the bare metal, it will become necessary to repair this area to prevent rust from forming. The damaged area should be lightly sanded with a medium to fine sandpaper making sure to remove all visible red and white rust. Wipe this area with a dry, clean rag. Coat the sanded area with a high quality, rust inhibiting, zinc enriched primer. This type of primer can be found at most paint or hardware stores, and should be labeled for covering bare and galvanized steel. Once the primer is applied, wait the time specified on the primer's instructions before you finish painting your door.

**Paint:** Your steel garage door can be painted with a high-quality latex (flat, satin, or semigloss) exterior grade paint. Since all paints are not created equal, the following test needs to be performed: paint should be applied on a small area of the door (following the instructions on the paint container), allowed to dry, and evaluated prior to painting the entire door. Paint defects to look for are blistering and peeling. An additional test is to apply a strip of masking tape over the painted area and peel back, checking to see that the paint adheres to the door and not to the tape.

After satisfactorily testing a paint, follow the directions on the container and apply to the door. Be sure to allow adequate drying time should you wish to apply a second coat.

Window frames & inserts can be painted with a high quality latex paint. The plastic should first be lightly sanded to remove any surface gloss.

**NOTE:** Do not apply paint when door surface temperature is different from manufacturer's suggested temperature range for application.

## SNAP-IN DECORATIVE INSERT

**Removal and Replacement:**
**NOTE:** DO NOT REMOVE SCREWS from the window frame. Decorative inserts are designed to snap-in and out of the window frame.

Some doors with windows have a decorative insert attached behind the window. They may be moved to the outside of the glass, or can be removed for cleaning or painting purposes.
1) Remove the four tabs of the insert from under the edge of the inside window frame. There is one tab on each side and one on the top and bottom of the insert.
2) The insert can be firmly pulled out of the window.
3) Replacing the insert is the reversal of the process described for removal. The four tabs must be pressed under the lip in the window frame.
4) If preferred, the insert can be snapped into the frame on the outside of the glass.

## WINDOWS

**WARNING**

**To avoid injury, use extreme caution in handling glass window pane. When the frame is removed, the exposed steel edge of the door may be sharp. Avoid contact with the steel edges.**

**Glass Replacement:** If your door is equipped with windows and the glass should need replacement, follow the steps below:
1) With someone holding the outside frame, remove the ten screws from the inside window frame.
2) Pull the inside frame out of the door.
3) **Carefully** remove the broken or old glass.
4) Insert the new (replacement) glass. The glass size should be 11" by 18½".
5) With someone holding the outside frame, reinsert the screws into the inside frame, trapping the glass.

# LOW HEADROOM OPTIONS

| SPRING | OPTION | REDUCES HEADROOM REQUIRED TO: | How Can I Get This Option? |
|---|---|---|---|
| Extension | Double Track Low Headroom | 4½ inches | Order low headroom track. |
| Extension | Low Headroom Conversion Kit | 4½ inches | Available at most retail stores. |
| Extension | Quick Turn Bracket* | 8" on 12" Radius Track | Order bracket & see below for instructions. |
| Torsion | Double Track Low Headroom Front Mount | 9½ inches | Available from & should be installed by professional installer only. |
| Torsion | Low Headroom Rear Mount | 4½ inches | Available from & should be installed by professional installer only. |

## Double Track Low Headroom

(Reduces headroom required to 4½" on extension springs, 9½" on front mount torsion springs) Instructions are provided with the track.

## Low Headroom Conversion Kit-— Extension Springs.

(Reduces headroom required to 4½")

This option is designed to modify the standard track. Instructions are provided in the kit.

## Quick Turn Bracket*

(Reduces headroom requirement to 8" on 12" radius track. Quick turn bracket cannot be used in conjunction with any other low headroom option.) This is used in place of the existing top roller.

1. Place two rollers in the tubes as shown (FIG. LHR-1). On some doors it will be necessary to try various roller positions to achieve the proper hinge location on the door.
2. Position the rollers and the bracket in the door track. Allow the hinged end of the bracket to come against the door. Apply sufficient pressure to be sure that the top of the door is closed tightly against the header.
3. Attach to the top of the door in the same manner as the original top roller bracket.
4. It may be necessary to relocate holes.

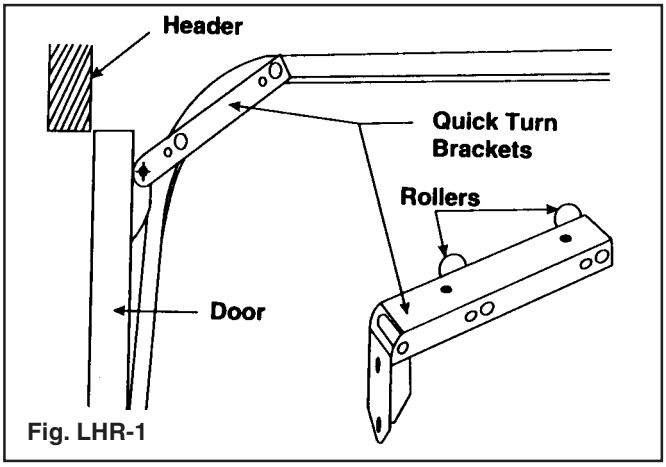

Fig. LHR-1

*Quick turn brackets cannot be used in conjunction with Windcode™ doors that require a strut mounted on the top of the top section. Double track low headroom or low headroom conversion kit hardware used instead.

# Lock Installation
# Slip sheet

Vertical tracks may appear to have no lock holes. On these tracks examine the track for this note. STRIKE SLUG FROM OTHER SIDE. Follow instructions below.

**#1 Snap Latch**
If installing the #1 snap latch lock discard these instructions.

**#2 Slide Bolt**
Install door per installation manual supplied. Determine position of slide bolt on #2 section. Remove the slug by striking with a hammer from the outside of the track. This may be accomplished after the balancing system is installed and the door is raised to the open position.

**#3Lock**
Install door per installation manual supplied. After the lock bars have been installed, mark the closest slug on each side of the vertical track. These will be the appropriate slugs to remove. Remove the slugs by striking with a hammer from the outside of the track. This may be accomplished after the balancing system is installed and the door is raised to the open position.

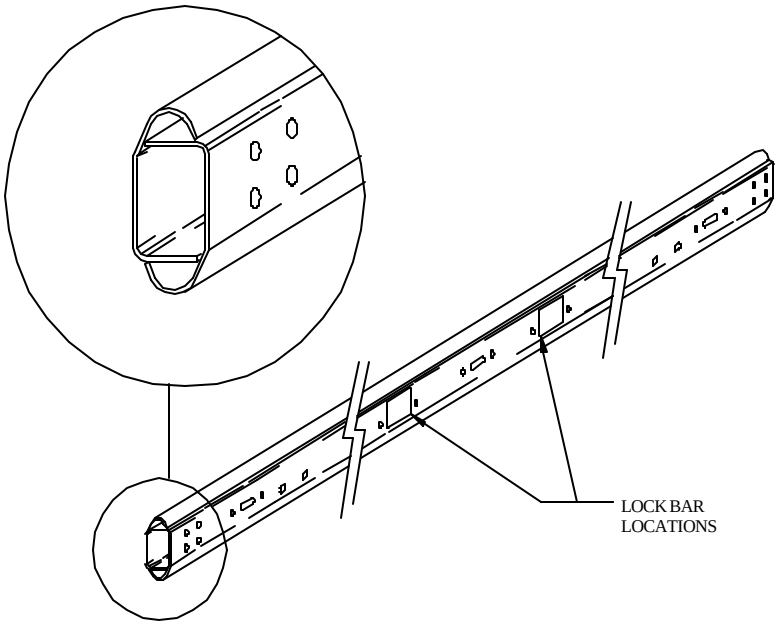

# SUPPLEMENTAL INSTRUCTIONS

## LIFT HANDLE ATTACHMENT

**Lift Handle Preparation**
If you have a 2" thick door, no modifications to the lift handle are necessary. If you have a 1-3/8" thick door, cut the stems on the lift handle along the ridge line using a hacksaw (Fig. 1A).

**Bottom Section**
From the front of the door section, drill (2) ½" holes through the section according to the Bottom Section Hole Pattern (Fig. 2). A T-Square may be used to mark the holes to ensure that they are vertically in line. If your door has an outside keyed lock, the hole pattern should be drilled on the bottom section directly below the lock. If your door does not have an outside keyed lock, the hole pattern should be drilled directly below the hinge closest to the horizontal center of the door.Install the lift handle & inside step plate assembly using (2) #14 x 5/8 sheet metal screws (Fig. 1).

**IMPORTANT: Use a wrench or a socket to drive screws. Do not over tighten. Do not use an electric drill or driver.**

**2nd Section (Not Required on Doors with Outside Keyed Lock)**
From the front of the door section, drill (2) ½" holes through the section according to the 2nd Section Hole Pattern (Fig. 2). A T-Square may be used to mark the holes to ensure that they are vertically in line. The hole pattern should be drilled directly above the hinge closest to the horizontal center of the door. Install the lift handle / inside step plate assembly using (2) #14 x 5/8 sheet metal screws (Fig. 1).

**Painting Lift Handles**
Plastic Lift Handles can be painted using a quality spray on or brushed on enamel paint.

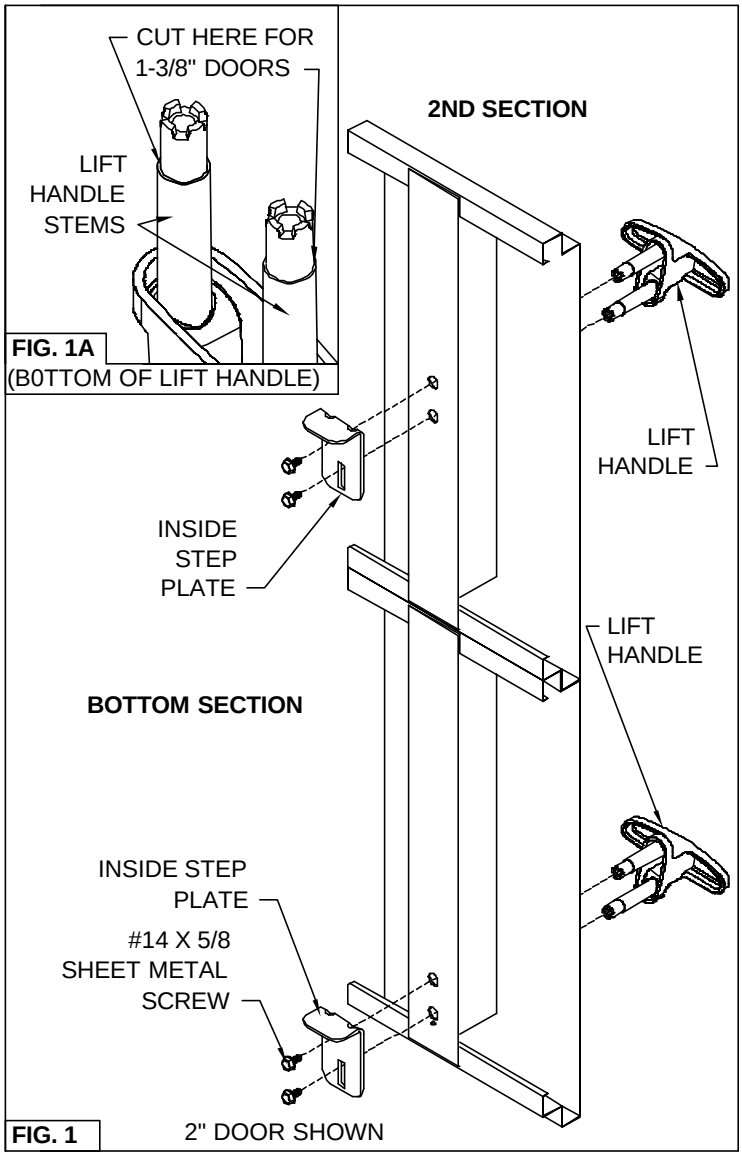


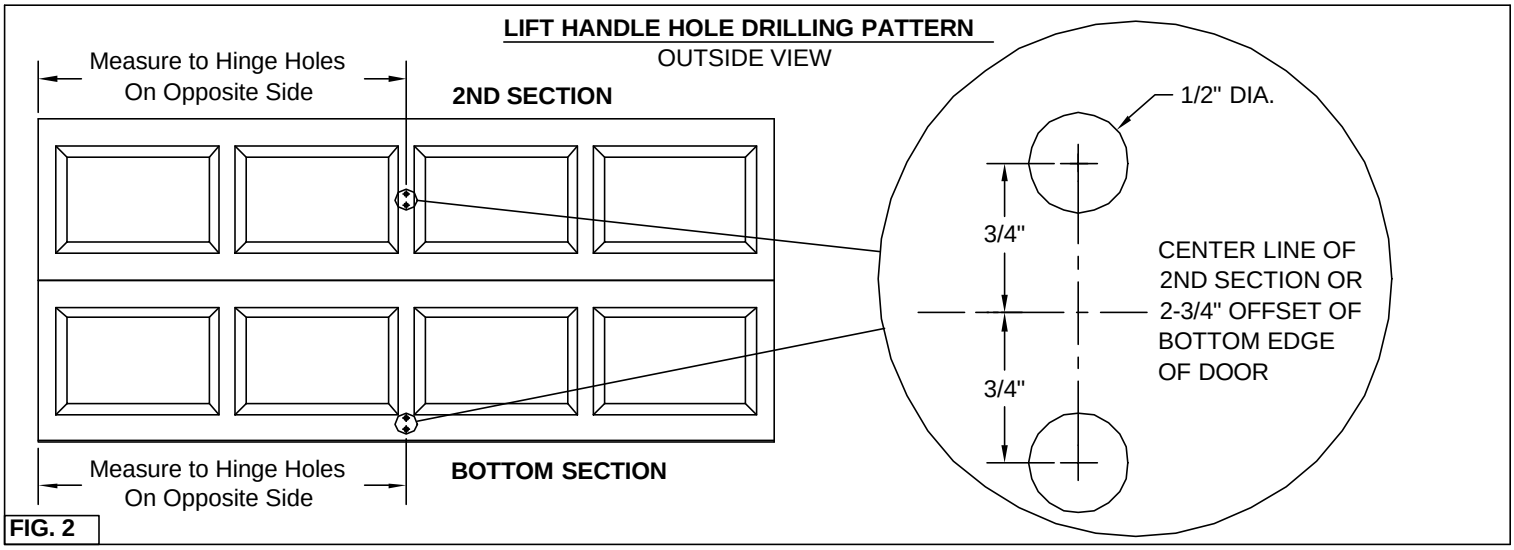

# INSTALLATION & MAINTENANCE

## Wood Residential Garage Door Instructions

Model: _____ Serial No. _____

(Provided on label on interior door surface)

Size: _____ Please complete & mail warranty registration card on page 8.

**Homeowners Should Retain This Booklet For Future Reference**

Clopay®

BUILDING PRODUCTS

*A Griffon Company*

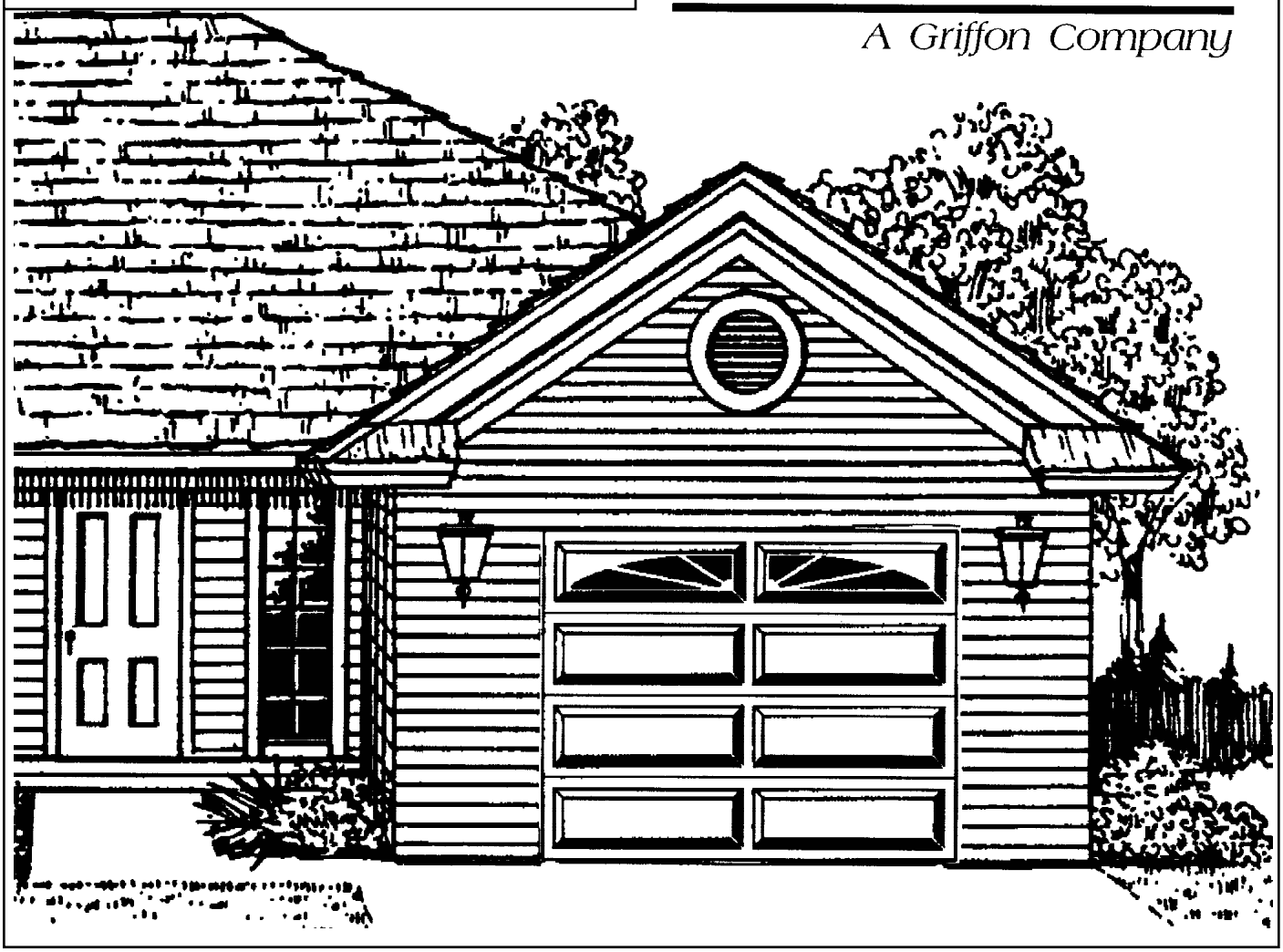

**CONSUMER HOTLINE • 1-800-2CLOPAY • 1-800-225-6729**

**Packer#**

**Hours of Operation (Eastern Time)** **Monday-Friday, 8:30 am-8 pm** **Saturday 8:30 am-5 pm**

*Dear Clopay Customer,*

*Thank you for purchasing a Clopay Garage Door. Your new Clopay Garage Door was built to meet the highest industry standard and to provide you with years of dependable performance.*

*This manual contains important installation and maintenance information. Carefully follow the instructions and maintenance recommendations. Please keep this manual for future reference.*

*If you should require any assistance or additional information, please call our Clopay Consumer Services Hotline at 1-800-2CLOPAY (1-800-225-6729). One of our representatives will be happy to assist you.*

*Remember to take a moment to complete all questions on your Warranty Registration Card (found on page 8) and return it to Clopay.*

*Thank you again for choosing Clopay!*

*Sincerely,*
*Clopay Building Products Company*

Clopay
America's Favorite Garage Doors™

# Table of Contents


***Introduction and Opening Preparation***

Safety Information ..... 3
Complete Garage Door Illustration with Torsion Springs ..... 6
Complete Garage Door Illustration with Extension Springs ..... 7
Hardware Components ..... 8,9
Removing an Existing Door ..... 10
- Removing Extension Springs ..... 10
- Removing Door Sections ..... 11

Check Headroom/Backroom/Sideroom ..... 12
Preparing the Opening ..... 13

***Installing the New Door***

Preparing and Installing Door Sections ..... 14
Lock Instructions ..... 17
- #1 Lock Assembly ..... 17
- #3 Lock Bar ..... 18

Assembling and Installing the Track ..... 20
- #1 Lock Assembly for Spring Latches & Striker Plates ..... 23
- For Lock Cables ..... 23
- #2 Slide Bolt ..... 24
- Attaching Diagonal Braces ..... 24

Assembling and Installing Extension Springs ..... 25
- Install Safety Containment Kit ..... 27

Assembling and Installing Torsion Springs ..... 28

***Maintenance/Adjustments/Options***

Checking and Adjusting Door ..... 31
Maintenance ..... 32
Replacement Parts ..... 32
Painting and Finishing Instructions ..... 33
Attaching an Automatic Opener ..... 34
Low Headroom Options ..... 35

***Lock Hole Templates***

#1 Lock Hole Pattern ..... 36
#3 Lock Bar Hole Pattern ..... 36

# SAFETY INFORMATION

## I M P O R T A N T !

**To Protect Yourself From Injury You Must Carefully Read The Following Safety Information And Warnings Before You Install Or Attempt to Repair Your Garage Door**

- You can install your new garage door yourself IF…
  1. you have help (it may weigh up to 400 lbs.);
  2. you have the right tools and reasonable mechanical aptitude or experience; and
  3. you follow these instructions very carefully.

- Garage doors use springs to balance them. There are two types of springs used—extension and torsion. Each of these is available in either a standard or EZ-Set assembly option. Please look at the drawings on pages 6 & 7 to see which springs your old door has. **If your old door uses torsion springs, do not attempt to remove the door or the springs yourself.** Have a qualified door repair service remove them. Attempting to remove a torsion spring assembly without proper training or tools may result in an uncontrolled release of spring forces which can cause serious or fatal injury.

- The brackets at the bottom corners of your garage door are under great tension. **Do not attempt to loosen any bracket fasteners** except when and as directed in detail in the following instructions. Otherwise, the bracket could spring out with dangerous force.

- In removing a garage door which has extension springs, follow the instructions carefully, including the use of “C” clamps or locking pliers on both sides of the door in order to keep the door from moving once the springs are removed.

- When installing a door with torsion springs, always use solid steel $^1/_2$" x 18" winding bars. Winding bars are available from many professional door installers. **The use of screwdrivers or any substitutes for winding bars will risk severe injury.** See page 28 for further safety instructions regarding winding bars.

- Keep hands and fingers clear of section joints, track, and other door parts when the door is opening and closing to avoid injury. The lift handle and pull down rope are located for safe operation as well as easy use.

- **Extension spring doors must never be operated without a properly installed spring containment cable.**

- Bolts must be installed at the rear end of horizontal tracks. These act to stop the rollers and keep the door from rolling off the back of the track.

- **Only the track specified and supplied with the door should be used.**

- Express warranties apply only to doors installed using original, factory-supplied sections, parts, and hardware installed in strict accordance with these instructions.

# SAFETY INFORMATION

## IMPORTANT!

**To Protect Yourself From Injury You Must Carefully Read The Following Safety Information And Warnings Before You Install Or Use Your New Garage Door**

- Track installations must use sway braces on the rear track hangers to prevent sideways movement. If the tracks are not firmly stabilized they might spread, allowing the door to fall and cause severe injury and damage.

- If your new door has a torsion spring (except EZ-Set Torsion™), the center torsion spring assembly uses a wooden pad that **must be of good quality and firmly attached to the wall.** Four ⅜" x 3" lag screws should be used to attach wood structure. The wood needs to be made of a Grade 2 or better Southern Yellow Pine (also known as Southern Pine or Yellow Pine.) **DO NOT** use wood labeled as Spruce-Pine-Fir (or SPF.). Four ⅜" masonry anchors can be used on concrete or block walls. If the wood splits once the torsion spring is in place, it should be replaced by a professional installer. **Do not try to remove or repair a torsion spring assembly or red fasteners once the spring is wound.**

- Springs, cables, and bottom fixtures are under strong spring tension. **Do not attempt to loosen any fasteners on these components.** You could suddenly release spring forces and risk severe injury.

- If the garage door and/or any of the supporting track are damaged, operating the door could be hazardous. Call an authorized representative of the manufacturer or a professional door repair service promptly.

- **Do not permit children to play beneath or with any garage door or electric operating controls.**

- If repairs are ever required to your door, safety and trouble-free operation can be best assured by using original replacement parts.

- Once you have completed the installation of your new garage door, please be sure that your garage complies with all applicable ventilation requirements before you enclose any vehicles in the garage. Good ventilation avoids fire and health hazards caused by fumes accumulating within a well-sealed garage.

- Clopay Building Products Company disclaims all liability for any installation which is not in compliance with applicable state or county building codes.

- Doors equipped with automatic door operators can cause serious injury or death if not properly adjusted and operated. To insure safe operation of these doors:
  a) test the sensitivity of the operator's safety reverse mechanism monthly;
  b) remove the pull rope;
  c) make sure the door remains unlocked;
  d) do not allow children to play with the controls.

# Things to Know Before You Begin

Read the instructions completely before starting the installation of the door. Becoming familiar with the components before assembling the door will reduce the installation time.

**In the interest of safety this symbol means WARNING or CAUTION. Personal injury and/or property damage may occur unless instructions are followed carefully.**

- Allow enough time to do the work; removing an existing door will take approximately 1-3 hours.
- An assistant may be required for lifting the unsprung door. It can weigh from 175 to 400 pounds.
- A typical installation takes between 9 and 12 hours to complete.
- Keep in mind when planning the installation that the garage will be open and unsecured when disassembling the old and assembling the new door.
- If the garage door is the only opening in the structure make sure everything you need is inside. You will have no way of leaving the garage until the track is assembled and installed. This will take approximately 5 hours.
- To avoid damage to the door, you must reinforce the top section of the door in order to provide a strengthened mounting point for attachment of an automatic opener (see page 34).
- Low Headroom doors require special instructions found on page 35. Purchase of additional hardware may be required. Check headroom requirements in the chart on page 12 before beginning.
- You must use the track and hardware provided with the new door for proper and safe operation.
- To avoid installation problems which could result in personal injury or property damage, never reuse old track.

# Tools Needed

- “C” Clamps or Locking Pliers
- Hammer
- Winding Bars (Standard Torsion Only)
- Screwdriver
- Tape Measure
- Level
- Socket wrench kit
- Pliers
- Drill (reversible recommended) and $^1/_4$", $^3/_{16}$", $^5/_{32}$", & $^3/_8$" bits
- Step ladder
- Saw horses or other supports for placing section on while assembling

# Additional Material Required

- Light household oil
- Your door may be unpainted or may be primed. A finish coat of paint must be applied within 15 days of unpacking for the warranty to be in effect. Painting the inside and the ends of the door is just as important as painting the outside. Upkeep of the door will require an additional coat of paint every 1-2 years. In high moisture regions, more frequent painting may be required. Many installers find it easier to paint the doors before installation. **Follow manufacturers paint instructions.**
- Punched Angle — For rear track hangers $1^1/_4$" x $1^1/_4$" angle at least 13 ga. or $^3/_{32}$" thick (this is not provided due to ceiling height differences)
- Six $^5/_{16}$" x $1^1/_2$" lag screws for rear track hangers
- Eight $^3/_8$" x 1" bolts and nuts for rear track hangers
- Ten 10d 3" nails
- Four $^3/_8$" x 4" lag screws — used to mount center pad on standard torsion installation
- Stop molding
- For automatic opener
  - Punched angle $1^1/_4$" x $1^1/_4$" (angle at least 13 ga. or $^3/_{32}$" thick) – See page 34 for more information.
  - See page 34 for the bolts or screws needed.

# Garage Door with Torsion Springs

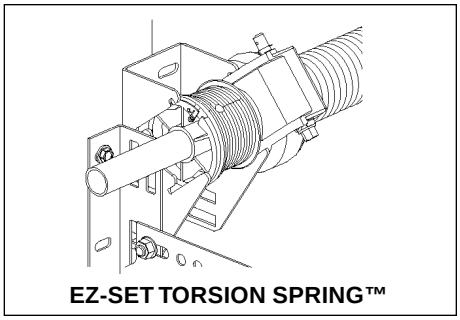


Track Hanger Kit (Angle Iron)
Not Included
Horizontal Track
Black Winding Cone
Right Cable Drum (Black)
Horizontal Angle
Spring Warning Tag
Single Torsion Spring
Torsion Tube
Left Cable Drum (Red)
End Bearing Plate
Center Bearing Plate
Flag Bracket
Flag Bracket
Top Roller Bracket
Operator Label
#1 Hinge
#1 Hinge
#4 Hinge
Vertical Track
#4 Hinge
Safety Warning Label
Vertical Track
#1 Hinge
#1 Hinge
#3 Hinge
#3 Hinge
Lock Cable
Long Track Bracket
#1 Hinge
Spring Latch
#2 Hinge
#2 Hinge
#1 Hinge
#1 Hinge
#1 Hinge
#1 Hinge
Bottom Bracket Warning Label
Bottom Bracket
I.D. Label
Bottom Bracket Warning Label
Short Track Bracket

DOUBLE TORSION SPRING

Left Cable Drum (Red)
Torsion Tube
Spring Warning Tag
Stationary Cone
Right Cable Drum (Black)
End Bearing Plate
Red Winding Cone
Center - Bearing Plate
Black Winding Cone
End Bearing Plate

**NOTE:** Instructions refer to right and left hand parts as though facing the door opening from inside of the garage.Standard headroom installation is illustrated.

# Garage Door with Extension Springs

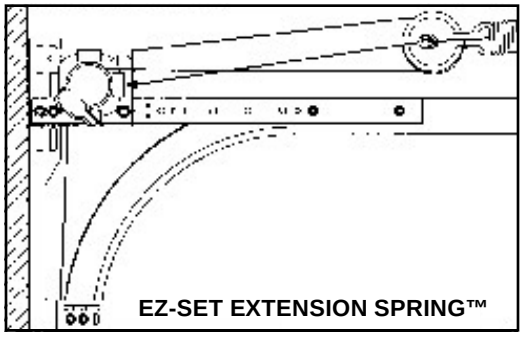


Track Hanger Kit
Not Included
Extension Spring
Spring Warning Tag
Containment Cable
Horizontal Angle
Sheave
Sheave
Horizontal Track
Short Strut
Flag Bracket
Operator Label
Top Roller Bracket
#1 Hinge
#1 Hinge
#1 Hinge
#3 Hinge
#3 Hinge
Vertical Track
Vertical Track
#1 Hinge
#1 Hinge
#1 Hinge
Safety-Warning Label
#2 Hinge
#2 Hinge
Long Strut
Long Track Bracket
Lock
#1 Hinge
#1 Hinge
Bottom Bracket Warning Label
#1 Hinge
#1 Hinge
#1 Hinge
I.D. Label
Bottom Bracket Warning Label
Short Track Bracket
Bottom Bracket
Diagonal Brace
Lift Handle
Short Strut
Bottom Bracket
Pull Rope

**NOTE:** The opposing page illustration and the above illustration represent a composite of many of the features found on a variety of garage doors. While not representative of any one door, it provides a handy reference for the location of specific components and hardware.

# Hardware Components

All doors will receive (2) of these items:

| | | |
|---|---|---|
| TRACK BRACKET (LONGER) | $^3/_8$" – 18 X $^3/_4$" LG. CARRIAGE BOLT | $^3/_8$" WASHER |
| TRACK BRACKET (SHORTER) | TOP BRACKET | CURVED HORIZONTAL TRACK |
| #2 HINGE | BOTTOM BRACKET (1) PAIR | VERTICAL TRACK |
| #3 HINGE | HORIZONTAL ANGLE | CABLE ASSEMBLY |
| | FLAG BRACKET (1) PAIR | |

## The Following Item Quantities Vary By Model

(While not representative of any one model, the quantities below can be used as a guide.
In some instances, extra screws/bolts are provided in the event of strip out or loss of parts.)

| DESCRIPTION | DOOR SIZE | QTY. |
|---|---|---|
| $^1/_4$" HEX NUT | Single Car Doors 8' - 9' W X 6'-6"H 7'-0"H | 48 |
| | Double Car Doors 16' W X 7' H | 72 |
| $^1/_4$" HEX NUT (RED COATED)**** | Single Car Doors 8' - 9' W X 6'-6"H 7'-0"H | 8 |
| | Double Car Doors 16' W X 7' H | 8 |
| $^1/_4$" FLANGE NUT | Single Car Doors 8' - 9' W X 6'-6"H 7'-0"H | 16 |
| | Double Car Doors 16' W X 7' H | 22 |
| #6 EYESCREW | Single Car Doors 8' - 9' W X 6'-6"H 7'-0"H | 1 |
| | Double Car Doors 16' W X 7' H | 1 |
| $^1/_4$" X $1^7/_8$" CARRIAGE BOLT *Model 32A uses $^1/_4$" x 1" lags* | Single Car Doors 8' - 9' W X 6'-6"H 7'-0"H | 56 |
| | Double Car Doors 16' W X 7' H | 80 |
| STRUTS | Single Car Doors 8' - 9' W X 6'-6"H 7'-0"H | 0* |
| | Double Car Doors 16' W X 7' H | 3** |
| STRUT CLIPS | Single Car Doors 8' - 9' W X 6'-6"H 7'-0"H | 0 |
| | Double Car Doors 16' W X 7' H | 10 |

| DESCRIPTION | DOOR SIZE | QTY. |
|---|---|---|
| ROLLERS | Single Car Doors 8' - 9' W X 6'-6"H 7'-0"H | 10 |
| | Double Car Doors 16' W X 7' H | 10 |
| #1 HINGE | Single Car Doors 8' - 9' W X 6'-6"H 7'-0"H | 5 |
| | Double Car Doors 16' W X 7' H | 11 |
| $^1/_4$" X 1" LAG SCREW | Single Car Doors 8' - 9' W X 6'-6"H 7'-0"H | 4 |
| | Double Car Doors 16' W X 7' H | 30 |
| LIFT HANDLE | Single Car Doors 8' - 9' W X 6'-6"H 7'-0"H | 3*** |
| | Double Car Doors 16' W X 7' H | 3*** |
| $^1/_4$" X $^5/_8$" TRACK BOLT | Single Car Doors 8' - 9' W X 6'-6"H 7'-0"H | 16 |
| | Double Car Doors 16' W X 7' H | 22 |
| $^5/_{16}$" X $1^5/_8$" LAG SCREW | Single Car Doors 8' - 9' W X 6'-6"H 7'-0"H | 10 |
| | Double Car Doors 16' W X 7' H | 10 |
| $^1/_4$" X 1" LAG SCREW (RED HEAD)**** | Single Car Doors 8' - 9' W X 6'-6"H 7'-0"H | 8 |
| | Double Car Doors 16' W X 7' H | 8 |

* (2) short and (1) long strut, door Models #31 & 32A Only
** (2) short and (1) long strut, and (2) pieces of diagonal bracing
*** Door Model #18 will have (2) lift handles
**** For Model 32A there are 8 red-coated lag screws instead of 8 red-coated nuts

**IF YOU HAVE ANY QUESTIONS CONCERNING PARTS, KNOW YOUR DOOR MODEL AND SIZE, CALL 1-800-225-6729**

# Additional Hardware Components

**(For EZ-Set Torsion or EZ-Set Extension Springs, please refer to supplemental instructions)**

## For Standard Torsion Spring Doors Only

| DESCRIPTION | DOOR SIZE | QTY. |
|---|---|---|
| TORSION SPRING | Single Car Doors 8' - 9' W X 7' H | 1 |
| | Double Car Doors 16' W X 7' H | 1 or 2 |
| END BEARING PLATE | Single Car Doors 8' - 9' W X 7' H | 2 |
| | Double Car Doors 16' W X 7' H | 2 |
| TORSION TUBE | Single Car Doors 8' - 9' W X 7' H | 1 |
| | Double Car Doors 16' W X 7' H | 1 |
| CENTER BEARING PLATE | Single Car Doors 8' - 9' W X 7' H | 1 |
| | Double Car Doors 16' W X 7' H | 1 |
| CABLE DRUMS | Single Car Doors 8' - 9' W X 7' H | 2 |
| | Double Car Doors 16' W X 7' H | 2 |
| NYLON CENTER BEARING | Single Car Doors 8' - 9' W X 7' H | 1 |
| | Double Car Doors 16' W X 7' H | 1 |
| $^5/_{16}$" X $1^5/_8$" LAG SCREW | Single Car Doors 8' - 9' W X 7' H | 2 |
| | Double Car Doors 16' W X 7' H | 2 |
| $^5/_{16}$" X $1^5/_8$" LAG SCREW (RED HEAD) | Single Car Doors 8' - 9' W X 7' H | 2 |
| | Double Car Doors 16' W X 7' H | 2 |
| $^3/_8$" X $^3/_4$" HEX HEAD BOLT | Single Car Doors 8' - 9' W X 7' H | 4 |
| | Double Car Doors 16' W X 7' H | 4 |
| $^3/_8$" FLANGE NUT | Single Car Doors 8' - 9' W X 7' H | 6 |
| | Double Car Doors 16' W X 7' H | 6 |
| $^3/_8$"-16 X $^3/_4$" CARRIAGE BOLT | Single Car Doors 8' - 9' W X 7' H | 2 |
| | Double Car Doors 16' W X 7' H | 2 |

## For Standard Extension Spring Doors Only

| DESCRIPTION | DOOR SIZE | QTY. |
|---|---|---|
| EXTENSION SPRING | Single Car Doors 8' - 9' W X 7' H | 2 |
| | Double Car Doors 16' W X 7' H | 2 or 4 |
| SHEAVE | Single Car Doors 8' - 9' W X 7' H | 4 |
| | Double Car Doors 16' W X 7' H | 4 |
| SHEAVE FORK | Single Car Doors 8' - 9' W X 7' H | 2 |
| | Double Car Doors 16' W X 7' H | 2 or 6 |
| $^3/_8$" X $1^1/_4$" SHEAVE BOLT | Single Car Doors 8' - 9' W X 7' H | 4 |
| | Double Car Doors 16' W X 7' H | 4 |
| $^5/_{16}$" EYEBOLT | Single Car Doors 8' - 9' W X 7' H | 2 |
| | Double Car Doors 16' W X 7' H | 2 or 4 |
| SAFETY SPRING CONTAINMENT KIT | Single Car Doors 8' - 9' W X 7' H | 2 |
| | Double Car Doors 16' W X 7' H | 2 or 4 |
| (3) HOLE ADJUSTMENT KIT | Single Car Doors 8' - 9' W X 7' H | 2 |
| | Double Car Doors 16' W X 7' H | 2 |
| YOKE PLATE | Single Car Doors 8' - 9' W X 7' H | 0 |
| | Double Car Doors 16' W X 7' H | 0 or 2 |
| $^5/_{16}$" YOKE BOLT | Single Car Doors 8' - 9' W X 7' H | 0 |
| | Double Car Doors 16' W X 7' H | 0 or 4 |
| S-HOOK | Single Car Doors 8' - 9' W X 7' H | 2 |
| | Double Car Doors 16' W X 7' H | 2 |
| BLACK BUSHING | Single Car Doors 8' - 9' W X 7' H | 2 |
| | Double Car Doors 16' W X 7' H | 2 or 4 |
| $^5/_{16}$" FLANGE NUT | Single Car Doors 8' - 9' W X 7' H | 4 |
| | Double Car Doors 16' W X 7' H | 4 or 10 |
| $^3/_8$" FLANGE NUT | Single Car Doors 8' - 9' W X 7' H | 4 |
| | Double Car Doors 16' W X 7' H | 4 |

**IF YOU HAVE ANY QUESTIONS CONCERNING PARTS, KNOW YOUR DOOR MODEL AND SIZE, CALL 1-800-225-6729**

# Removing the Existing Door

**WARNING**

Garage doors use springs to balance the door weight. There are two types of springs used — extension and torsion. Each of these is available in either a standard or EZ-Set assembly option. Please look at the drawings on pages 6 & 7 to see which springs your old door has installed. **If your present door uses standard torsion springs, do not attempt to remove the door or the springs yourself.** They should be removed by a qualified door service professional. Attempting to remove a torsion spring assembly without proper training and tools may result in an uncontrolled release of spring forces which can cause serious or fatal injury.

Extension springs are shown installed on a sectional garage door in the illustration on Page 7. Instructions for removing these types of springs are provided below.

**WARNING**

**Serious injury could result if spring tension has not been released before other work begins.**

## Removing Extension Springs

**WARNING**

**Use two or more helpers to assist you in lowering the door.**

**Step 1a:** Raise the door to the full open position. Place "C" clamps or locking pliers tightly on both sides of the track under the door so the door is held securely in place. With the door fully open, most spring tension has been removed. (FIG. 1) **Do not attempt to remove or adjust extension springs with door in the down position. Use "C" clamps to keep the door from moving or falling once the springs are removed.**

**Step 1b:** Detach the cable at both ends. Disassemble and remove the springs and cable completely from the door.

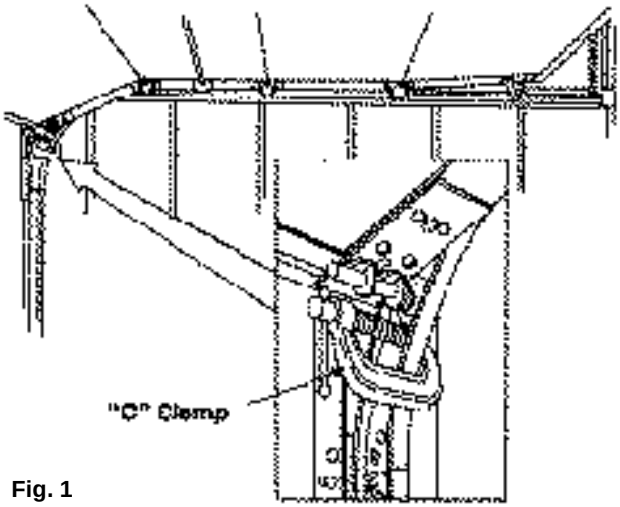


Fig. 1

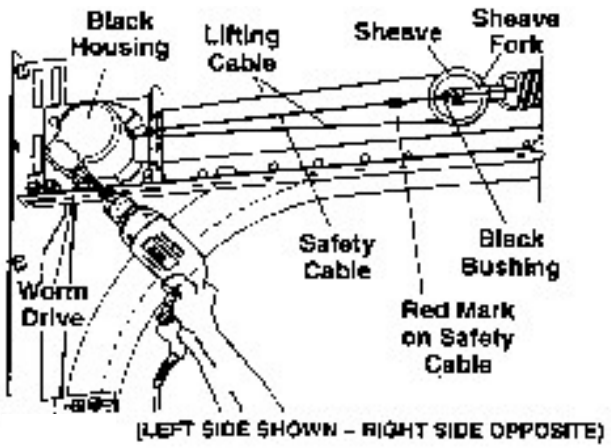


Fig. 2

**NOTE:** Wood blocks should be placed underneath the door when closing to prevent fingers from being trapped.

**Step 1c:** Remove the “C” clamps from the track and carefully close the door.

Some large doors might weigh as much as **400 pounds** when the spring tension is removed. The weight of the door will not be apparent when you first begin to close the door. The door will feel progressively heavier as it is lowered until its full weight (as much as 400 pounds) is realized about one foot from the floor. A single car door may weigh as much as **200 pounds**. (FIG. 3)

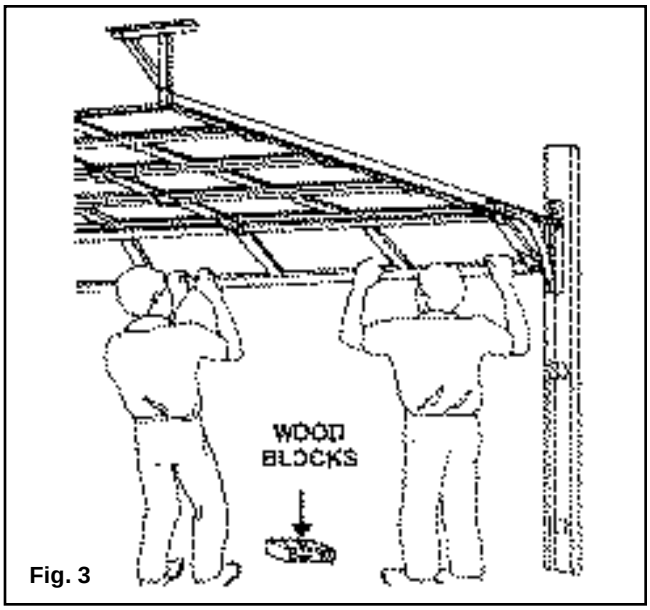

Fig. 3

**WARNING**

**To avoid injury, keep hands and fingers clear of section joints, track, and other door parts while the door is opening and closing.**

## Removing EZ-Set Extension Spring™

**Step 1:** With the door in the DOWN position, insert a 1/4" hex driver completely into each worm drive and using the reverse (counter-clockwise) direction on the drill, remove all the tension from each spring. (Fig. 2)

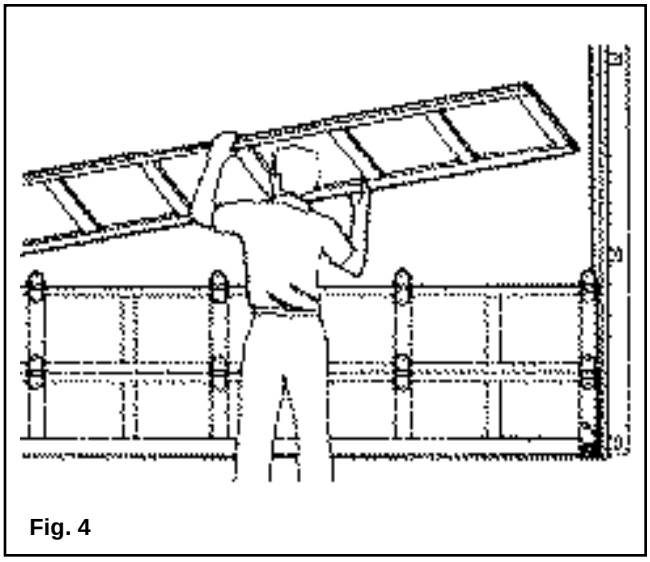
Fig. 4

## Removing Door Sections

**Step 2:** The door can now be disassembled. Starting with the top section, remove the hardware and unstack the sections one at a time. (FIG. 4)

**Step 3:** After all sections have been removed from the opening, detach all remaining track and hardware from the jambs. The hangers that attach the rear ends of the overhead track to the ceiling (called rear track hangers) in many cases can be reused on the new door if made of 13 gauge (3/32") or heavier steel and is not loose or unstable. (FIG. 5)

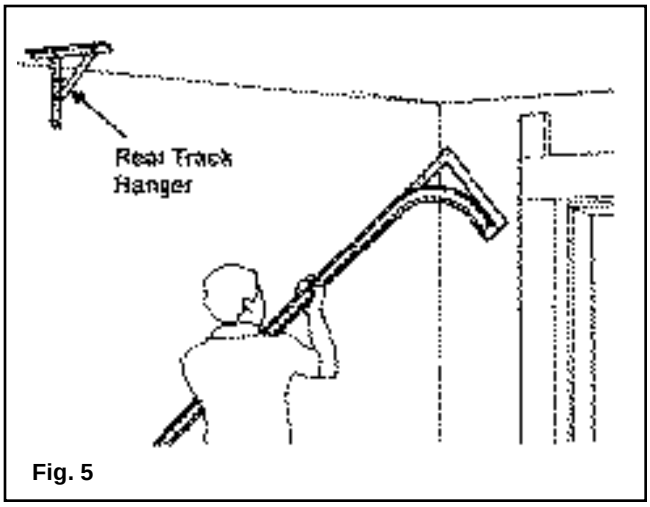

Fig. 5

**WARNING**

**To avoid installation problems which could result in personal injury or property damage, use only the track specified and supplied with the door. Do not attempt to reuse old track.**

# Check Headroom/ Backroom/Sideroom

Headroom is the space needed above the top of the door for the door, the overhead tracks, and the springs. Measure to check that there are no obstructions in your garage within that space. The normal headroom space requirement is shown in the chart below. The backroom distance is measured from the back of the door into the garage, and should be at least 18" more than the height of the garage door. A minimum sideroom of 3¾" (5½" for EZ-Set Extension Spring™) should be available on each side of the door on the interior wall surface to allow for attachment of the vertical track assembly. The rough opening should be the same size as the door. (FIG. 6)

Track Radius: The radius of your track can be determined by measuring the dimension “R” in Figure 7. If dimension “R” measures 11" to 12", then you have a 12" radius track. If “R” equals 14" to 15", then you have a 15" radius track. (FIG. 7)

**Headroom requirements:** The normal headroom space requirement is shown in the chart. (See page 6 or 7 if you have a question on which type of spring you have.)

**NOTE:** About 3" of additional headroom height at the center plus additional backroom is needed to install an automatic garage door opener. Check door opener instructions.

**Headroom Requirement Chart**

| SPRING TYPE | TRACK RADIUS | HEADROOM REQUIRED |
|---|---|---|
| EZ-Set Extension Spring™ or Extension Spring | 12" | 10" |
| EZ-Set Extension Spring™ or Extension Spring | 15" | 12" |
| EZ-Set Torsion Spring™ or Torsion Spring | 12" | 12" |
| EZ-Set Torsion Spring™ or Torsion Spring | 15" | 14" |

**Low Headroom?** If you have restricted headroom, several remedies are available. See page 35 for various options.

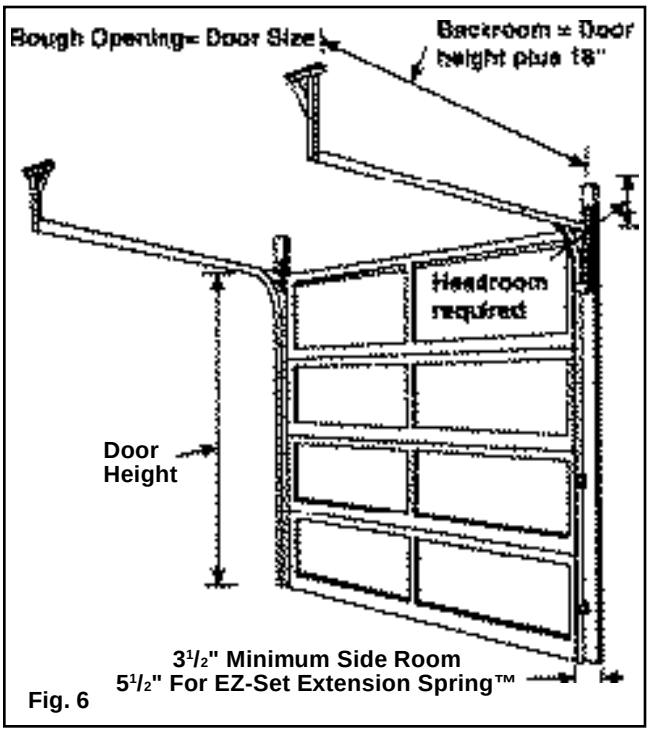

Fig. 6

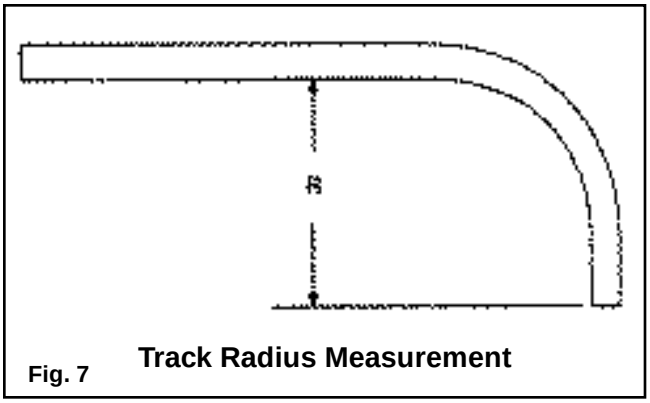

Fig. 7 **Track Radius Measurement**

# Preparing the Opening

**Step 1:** On the inside of the garage your opening should be framed with wood jambs, 2" x 6" if possible, as shown in Figure 8. The side jambs should extend to approximately the same height as the headroom required. If you have just removed an old door, the jambs should be inspected for the condition of the wood. If the wood is rotten, it should be replaced now. The jambs should be plumb and the header level. If there are any bolts fastening the jambs to the wall, the heads should be flush so they don't interfere with the installation of your new door. (FIG. 8)

**NOTE:** Rough opening = Door size

**For Standard Torsion Springs Only**

**WARNING**

If your door has a torsion assembly, **you must make sure that the wood anchor pad (see Fig. 8) is firmly attached to the garage wall.** Failure to securely attach the anchor pad could allow the springs to violently pull away from the garage wall, and could result in severe injury and/or property damage. **Under no circumstances should the anchor pad be attached with nails.**

Refer to Figure 8 for the configuration of 2" x 6" wood jambs. Wood anchor pad should run from header jamb to ceiling to a maximum length of 18".

**IMPORTANT:** The wood anchor pad must be made of a Grade 2 or better Southern Yellow Pine (also known as Southern Pine or Yellow Pine). The Southern Yellow Pine must be free of splits and cracks. **Do not use wood labelled as spruce-pine-fir (or SPF).**

The wood anchor pad must be installed into the frame of the garage with at least four 3/8" x 4" long lag screws (one at each corner). The four lag screws must be installed no closer than 1 1/2" from the sides and the ends of the 2 x 6. These lag screws must fasten into the wood frame of the garage, not the drywall or sheet rock. Wood anchor pad and 3/8" x 4" lag screws are not supplied.

**NOTE:** The wood anchor pad can be off-center to the width of the opening by up to 10" in either direction.

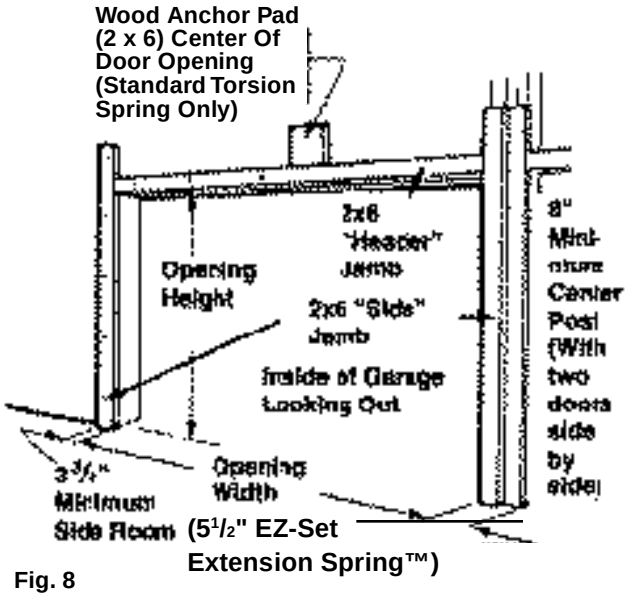

Fig. 8

**Step 2:** Door stop molding should be temporarily nailed to the edges of the jambs flush with the inside. (FIG. 9)

Stop molding featuring a built in weather seal is offered as an option.

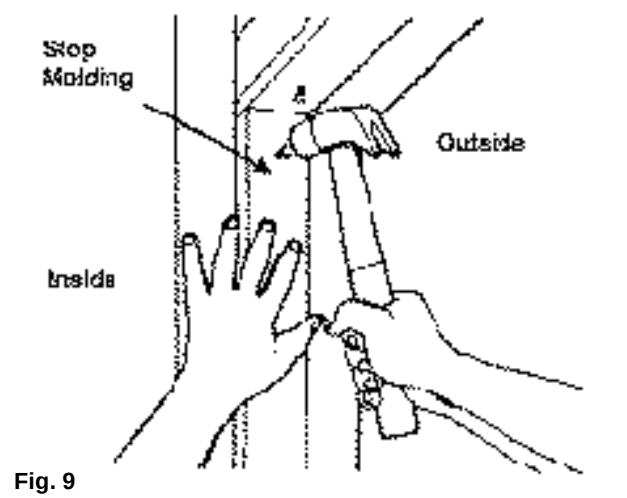

Fig. 9

# Installing the New Door

## Preparing and Installing Door Sections

**Step 1:** Spread the hardware on the garage floor in groups so that you can easily find the parts.

**Step 2:** Set the bottom section in place against the doorstop molding. Be sure the upper lip of the lap joint is up toward the inside. Center the section in the opening. Shim so the section is level.

**Note:** To distinguish between top and bottom sections that are the same height: the upper lip of the lap joint of the bottom section goes inside and the marks made by the staples go inside. (FIG. 10)

**Step 3:** A level bottom section is critical to a well fitting door. The bottom section of the closed door must come to rest level. If it does not the door will not work properly. If the surface is uneven you can obtain a better fit by trimming the bottom rail. Cut a small block of wood about 2 inches wide by 3 inches long, the same thickness as the largest space under the **leveled** bottom section. Holding the pencil on the block, slide the block along the floor to mark the door. The block thickness cannot be more than 1 inch. Cut along the mark with a saw. (FIG. 11)

**NOTE:** Floor must be leveled if more than 1 inch must be removed from door.

Figure 12 shows common terms used in the instructions.

The inside of the door can be identified by the marks made by staples. Keep the staples to the inside for appearance and to assure proper alignment of the pre-drilled holes for the hinges. (FIG. 12)

**Step 4:** Bend and break apart bottom brackets by hand at connection tabs as shown. (FIG. 13)

**NOTE:** Remove connection tab.

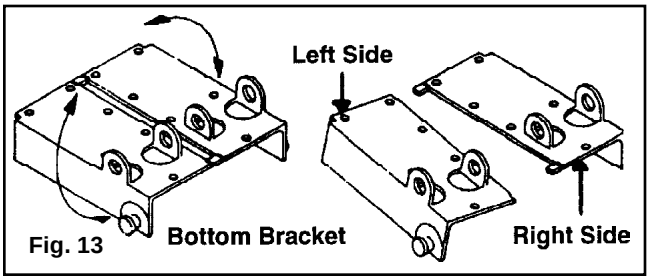

Fig. 13

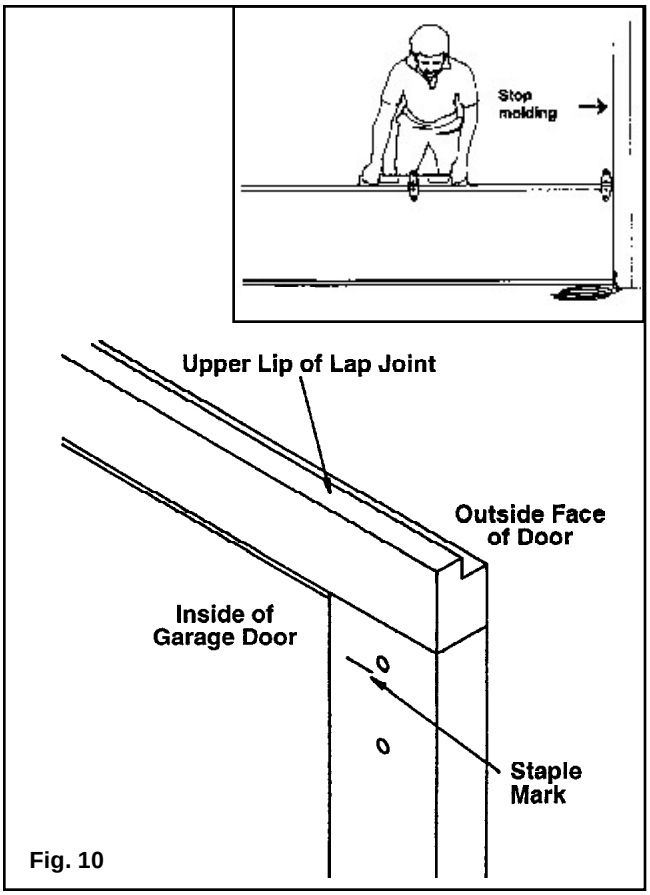

Fig. 10

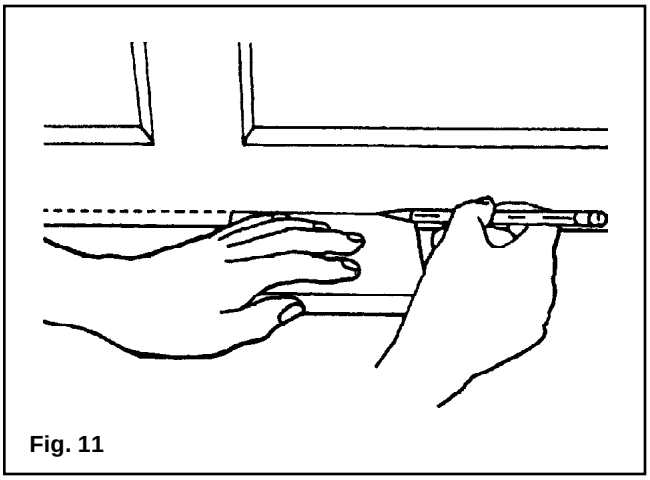
Fig. 11

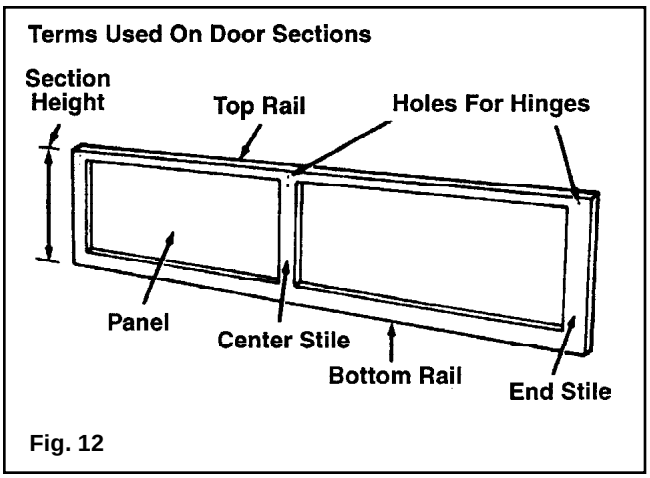

Fig. 12

All hinges, brackets, handles, etc. are attached to the door using 1/4" x 1 7/8" carriage bolts. An exception is the Model 32A which uses 1/4" x 1" lag screws.

If your door is a Model 32A refer to the inset, (see Figure 14A), otherwise, first drill 1/4" diameter holes through the door for the bolts and install the bottom roller bracket. Tighten red coated 1/4" hex nuts until the bolt heads are flush with the outside surface. For Model 32A, use red-headed 1/4" x 1" lag screws.

Red coated fasteners must be installed for the attachment of the bottom bracket to indicate this part will be under extreme tension once the door is installed.

**NOTE**: Both bottom roller brackets must be at the same height when measuring from the top of the section to the brackets on both ends.

## Adjusting bottom roller brackets

If you trimmed the bottom rail to fit your garage sill, and if you trimmed more off one end of the section than the other, you will have to adjust the positions of the bottom roller brackets. Install the bottom roller bracket on the end of the section that had more of the bottom rail removed.

Then install the other bottom roller bracket so that the brackets will be the same distance from the top rail. (FIG. 14)

**Step 5:** Hinges are identified by number 1, 2, 3 and sometimes 4 (on 5 section doors only). This number is stamped on the hinge. Attach a number 1 hinge to each stile with pre-drilled holes along the top edge of the section. The number is stamped on the bottom of the hinge that is to be attached to the section.

Insert the carriage bolts into the pre-drilled holes from the outside. Bolt hinges on as shown. (FIG. 15)

(For Model 32A use two 1/4" x 1" lag screws instead of carriage bolts and nuts. (FIG. 16)

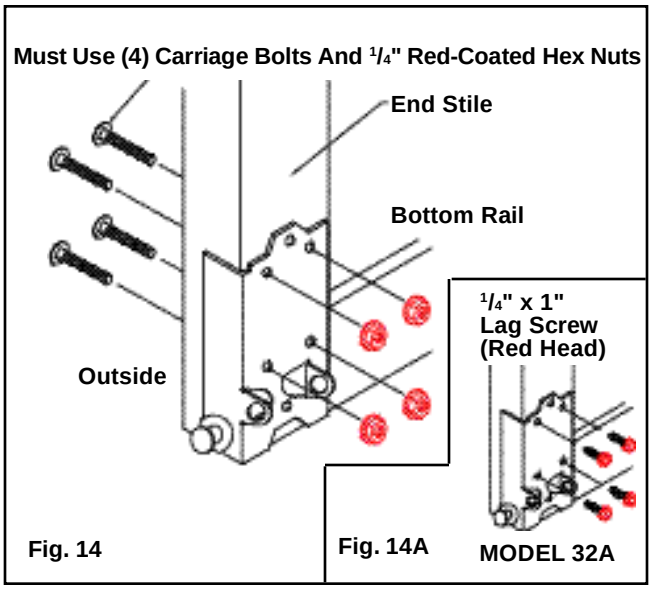


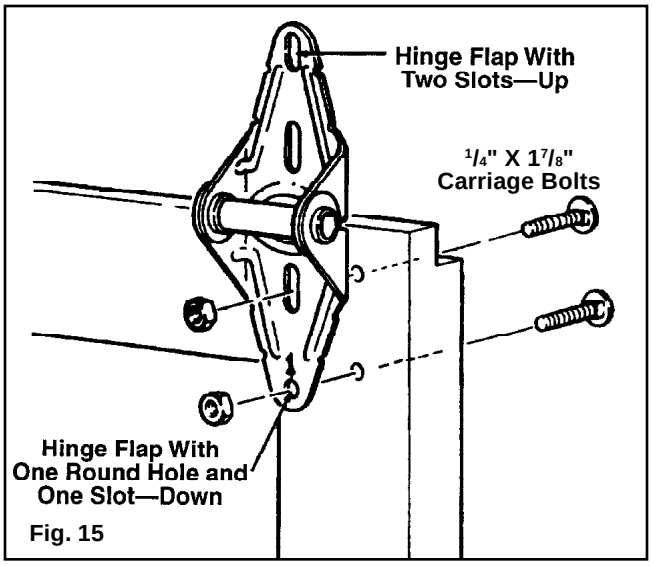

Fig. 15

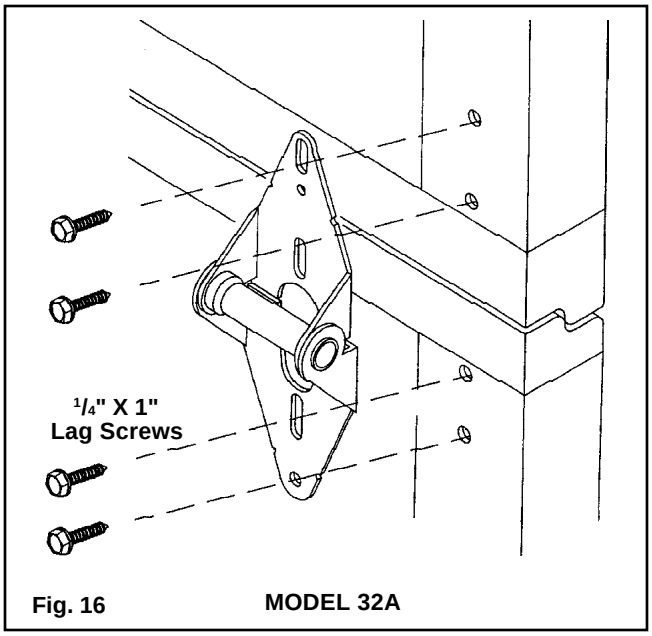

Fig. 16 MODEL 32A

If your door was supplied with struts it received 1 long and 2 shorter struts. A short strut should be installed at this time. Center the strut about 1 1/2" from the bottom of the section. Drill 5/32" pilot holes no more than 1" deep at each hole in the strut. Install 1/4" x 1" lag screws at these locations. Install the inside and outside lift handles in the center of the door on the bottom rail of the bottom section. Drill two 1/4" holes through the wood, and fasten with two 1/4" x 1 7/8" carriage bolts. (FIG. 17)

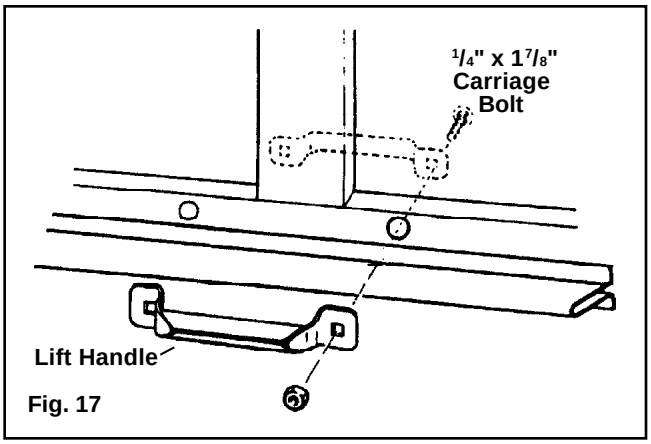

Fig. 17

**WARNING**

**Do not install the lift handles on the intermediate rails near the joints between sections. There is a risk of severe injury to a finger if the handles are installed too close to the joints.**

**Step 6:** Install bottom weatherstrip (optional weatherstrip not included) according to the instructions supplied with the weatherstrip.

**Step 7:** Place the bottom section in the opening so it is against the door stop molding and centered from side to side. Recheck to be sure the section is level. (FIG. 18)

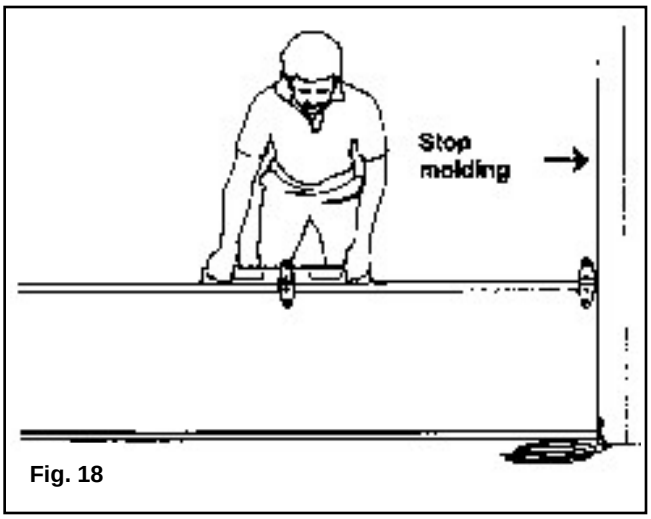

Fig. 18

Remove the level and drive a 10D 3" nail in the jamb at both ends. Toenail (drive the nail at an angle) so the section is held tightly against the molding. (FIG. 19)

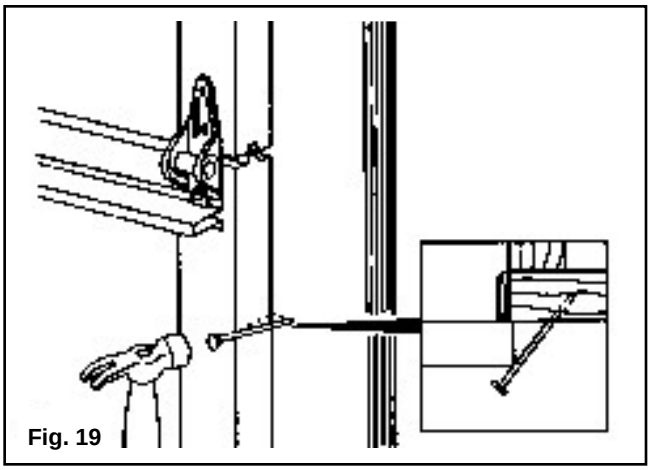
Fig. 19

**NOTE:** Be sure the toenails hold the section against the molding. Toenails will be the only thing holding the stacked door sections until the tracks are secured to the back jambs.

**Step 8:** Place the next section face down on the saw horses. If your door is to have a lock it will be one with holes in the center of the panel face. Identify the bottom edge as shown in the illustration. As in Step 5 attach a number 2 hinge to each at the top edge. Remember that the number is stamped on the side of the hinge that is to be attached at the section. Attach a number 1 hinge to all pre-drilled members along the top edge of the section. (FIG. 20)

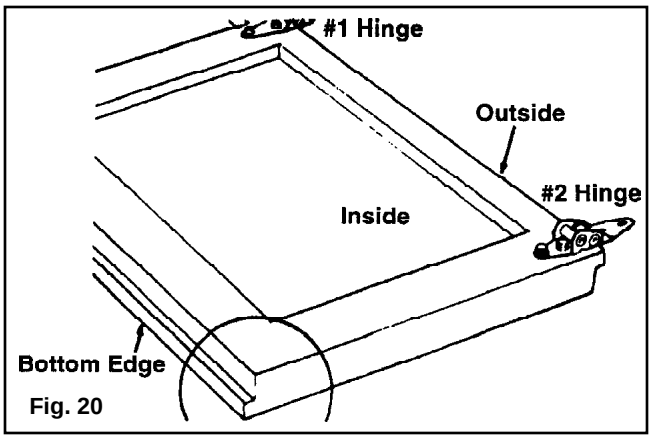

Fig. 20

**NOTE:** On a five-section door attach the lock on the third (middle) section or the lock will be too low for convenience.

Doors provided with struts require that the long strut be applied to the bottom leaf of this row of hinges. Using the strut clips to overlap the edges of the strut, fasten the carriage bolts and nuts through the door, hinge, and clip. Model 32A uses lag screws. (FIG. 21)

If your door was provided with a #1 snap latch or #3 lock bar style mechanism, it is easiest to install the lock mechanism now. A template is provided on pg. 36 for doors without pre-drilled holes.

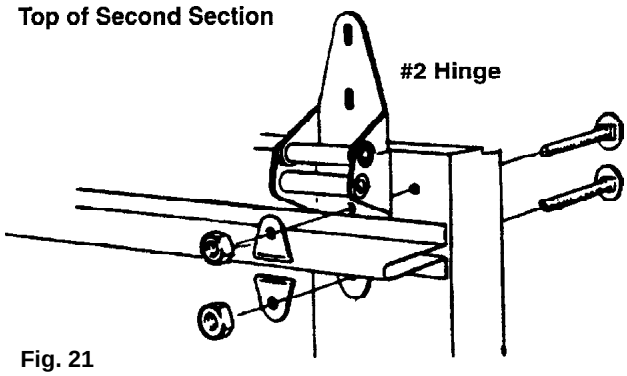

Fig. 21

## Lock Installation

**NOTE: If your door is going to be equipped with an automatic garage door opener, make sure that the door is always unlocked when the operator is being used. This will avoid damage to the door.**

### #1 Lock Assembly (Fig. 22)

**Step 1:** Drill holes through door per page 36, if needed.

**Step 2:** Slide the outside handle (1) through the holes in the lock section.

**Step 3:** Attach the backing plate (2) to the outside handle (1) using two #10 - 24 x ¾" machine screws (3).

**Step 4:** Slides the inside release handle (4) over the shaft of the outside handle and secure in place using the tinnerman nut (5). Be sure the tinnerman nut is pressed firmly against the inside release handle.

**Step 5:** Slide the vinyl sleeve (6) over the arm of the inside release handle.

**NOTE: The spring latches, striker plates and lock cables are to be assembled after the door and all other hardware is in place.**

Proceed to Step 9 of Door Installation on page 18.

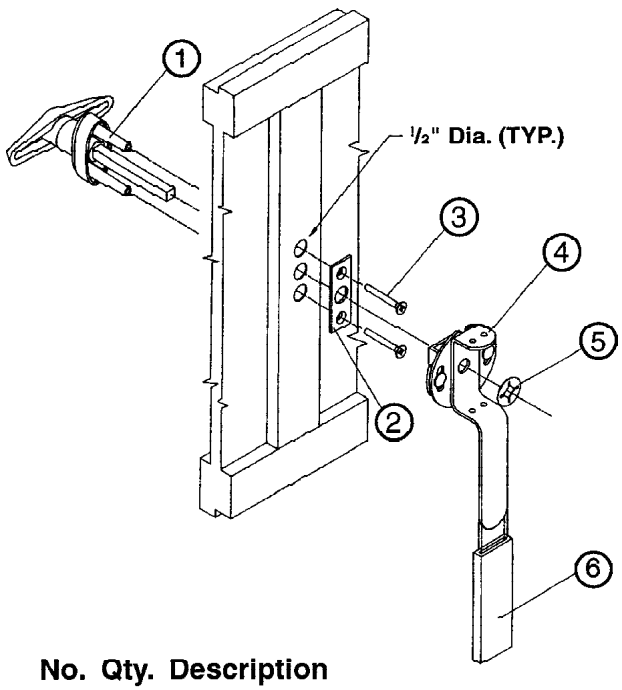


| No. | Qty. | Description |
|---|---|---|
| 1 | 1 | Outside "T" Handle |
| 2 | 1 | Backing Plate |
| 3 | 2 | #10 - 24 x ¾" Machine Screws |
| 4 | 1 | Inside Release Handle |
| 5 | 1 | Tinnerman Nut |
| 6 | 1 | Vinyl Sleeve |

Fig. 22

## #3 Lock Bar (Fig. 23)

**Step 1:** Drill holes through the door per page 36, if needed.

**Step 2:** Install escutcheon plates by centering the outside escutcheon plate over the outside of the 3/4" inch hole. Drill pilot holes and attach with screws. Center the inside escutcheon plate over the inside of the 3/4" hole. The inside and outside escutcheon plates should be turned 90° to each other so the screw holes DO NOT line up. Drill pilot holes and attach with screws. (FIG. 23)

**Step 3:** Insert the outside handle from the outside. On the inside add: 3/8" washer, lock bar assembly, and inside handle. If necessary, add several 3/8" washers to position the latch and keep it in position. Insert the lock handle pin. Tap it in place with a hammer.

**Step 4:** Install the lock cylinder with the numbers on the top of the lock by inserting the shaft of the lock cylinder through the escutcheon ring and the large diameter hole in the door. Secure the lock cylinder with the lock cylinder back plate and #12 x 1 1/4" machine screws.

**Step 5:** Insert the shaft from the lock cylinder into the hole. With the night latch in a vertical position, place the night latch directly over the shaft and mark the position of the screw holes. Drill pilot holes and attach the night latch. Put the upper left hand screw through the loop of the lock bar spring. Hook the lock spring into the hole in the lock bar.

| Qty. | Item# | Description |
|---|---|---|
| 1 | 1 | Outside escutcheon plate |
| 2 | 2 | #10 x 1" Countersunk slotted screw |
| 1 | 3 | Outside T-handle |
| 1 | 4 | Inside escutcheon plate |
| 2 | 5 | #10 x 1" countersunk slotted screw |
| 1 | 6 | 3/8" washer |
| 1 | 7 | Escutcheon ring |
| 1 | 8 | Cylinder lock |
| 1 | 9 | Cylinder back plate |
| 2 | 10 | #12 x 1 1/4" machine screw |
| 1 | 11 | Night latch |
| 4 | 12 | #10 x 1 1/2" screw |
| 1 | 13 | Lock bar assembly |
| 1 | 14 | Inside T-handle |
| 1 | 15 | Roll pin |
| 1 | 16 | Lock bar spring |

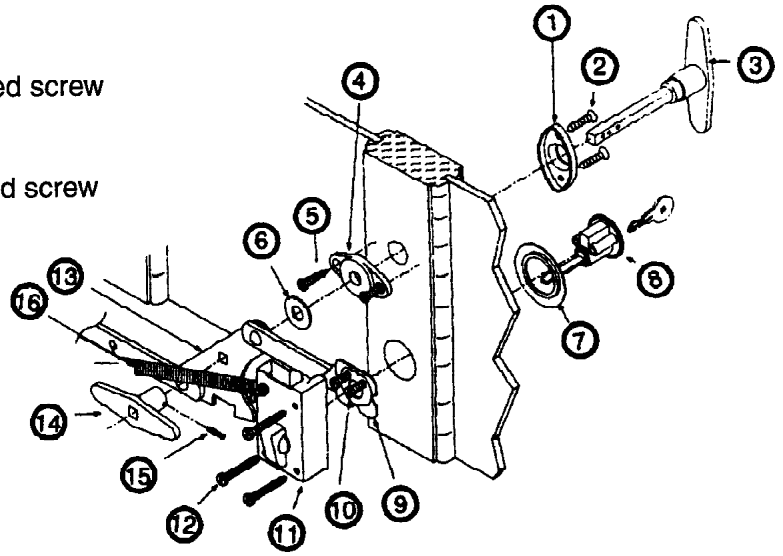


Fig. 23

# Installing the New Door (Continued)

**Step 9:** Place second section on top of the first section. Drive a large nail in the jambs at each end and bend it over the edges of the section to hold the section in place. Attach the hinges from the top of the first section to the bottom of the second. (FIG. 24)

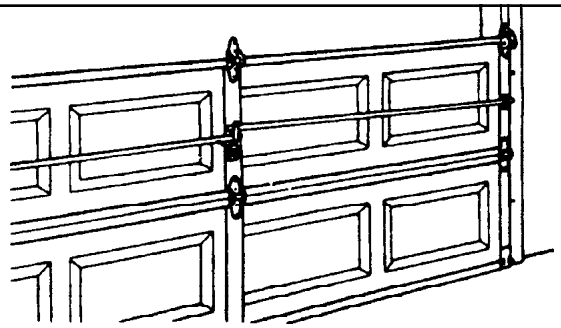

Fig. 24

**Step 10:** Place the third section on saw horses. Attach number 3 hinges to the ends at the top edge and number 1 hinges to all other holes along the top edge. (FIG. 25)

**Step 11:** Place this section on top of the other sections and nail in place as before. Attach the hinges from the top of the previous section to the bottom of this section using carriage bolts and nuts. (FIG. 26)

**NOTE:** If you have two sections left, repeat Step 7 using #4 hinges on the end of the top edge and #1 hinges to all other stiles along the top edge.

**NOTE:** Install the last short strut on models with three struts by centering the strut 1" to 1$^1/_2$" from the top of the section. Drill $^5/_{32}$" pilot holes and install $^1/_4$" x 1" lag screws. (FIG. 27)

**Step 12:** Place top section on sawhorses. Attach top bracket to top section. Allow $^1/_4$" between edge of top section and bracket. Position brackets so that top bolts go through top rail and bottom bolts go through end stile, with the top bracket centered between junction of end stiles and top rail. Mark holes and pre-drill $^1/_4$" diameter holes for top brackets. Bolt top bracket using same fasteners used to attach hinges. (FIG. 28)

**Step 13:** Set the top section in place, toenail and connect hinges to the section it rests on as with previous sections.

**Step 14:** Place a roller in the bottom brackets and in the tubes in each of the hinges at the ends of each section. Some hinges have two tubes. Place the roller in the tube that is farthest from the face of the door. (FIG. 29)

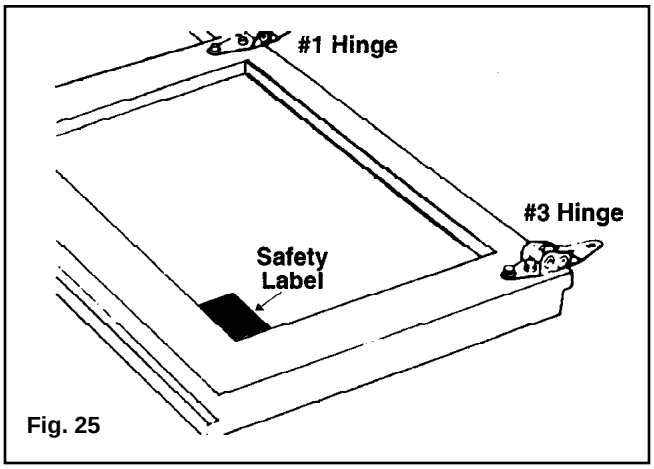

Fig. 25

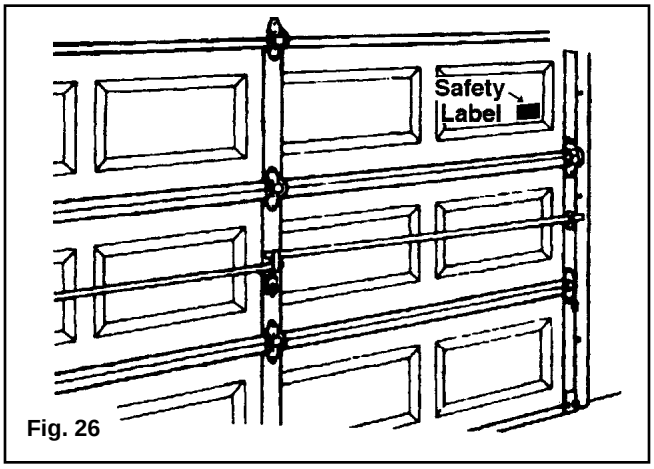

Fig. 26

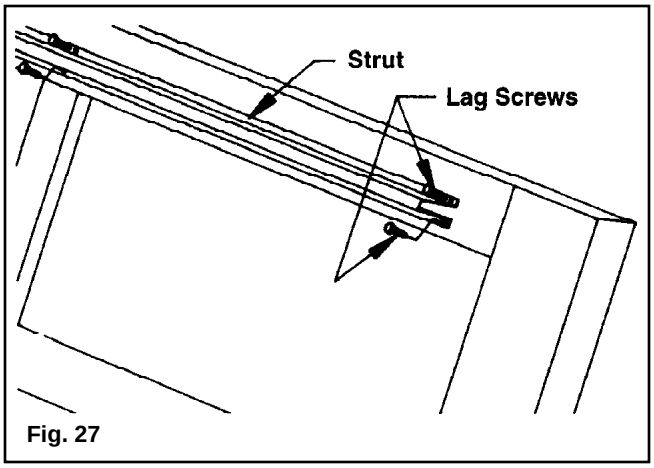

Fig. 27

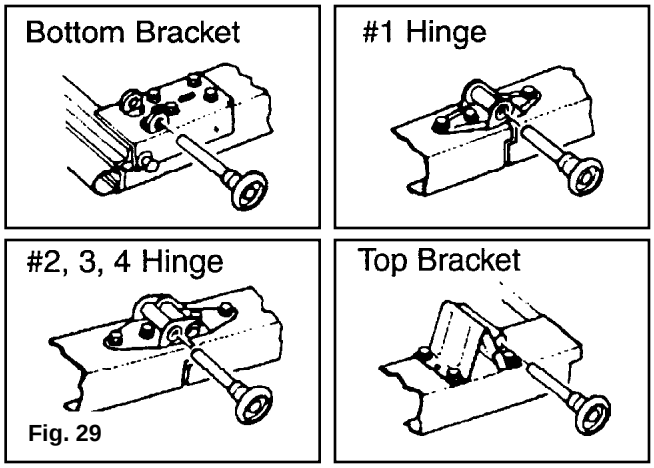

Fig. 29

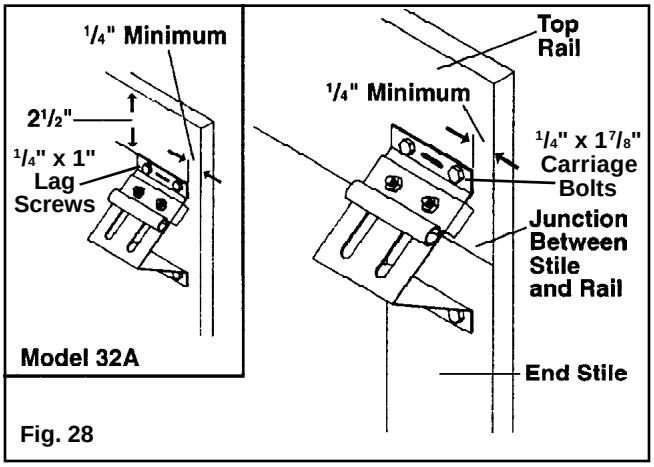

Fig. 28

# Assembling and Installing the Track

Before assembling brackets to vertical track be sure to read Step 1 and Step 2. Refer to illustration for placement of brackets on track.

**NOTE:** Brackets may already be riveted in place. If additional adjustment is required, the rivets can be drilled out and the brackets can be reattached with track bolts and flange nuts (available through the Consumer Hotline).

**WARNING**

**To avoid installation problems which could result in injury or property damage, use only track provided with new door.**

**Step 1:** Loosely fasten the track brackets to the vertical track using one 1/4" x 5/8" track bolt and 1/4" flange nut as shown with the head of the bolt inside the track. There are two sizes of brackets. The shortest track brackets should be installed ten inches from the bottom of the track with the flange facing the flat side of the track. This ensures proper placement of the track, one on the left and one on the right. The flat side of the track goes toward the wall. (FIG. 1-T)

Remaining long track brackets should be centered on the vertical track.

**Step 2:** Loosely attach the flag bracket to the top of the track with two 1/4" x 5/8" track bolts and 1/4" flange nuts with the head of the bolts in the track. Make sure bolts and nuts are attached through the proper holes (two holes closest to the jamb) in flag bracket for your door thickness. (FIG. 2-T)

(Refer to FIG. 2-T to determine proper bolt placement.)

**NOTE:** If additional adjustment is required, horizontal slots in flag brackets can be used for attachment to vertical track.

**Step 3:** Place the track over the rollers on the door. Move the track close to the door so that the rollers are all the way into the hinges. Do not force the track too tightly or the door will bind. This should leave about 3/8"-1/2" between the edge of the door and the track. Pilot holes of 3/16" are required at each lag screw location before installing the lag screw. Lift track about 1/2" from the floor

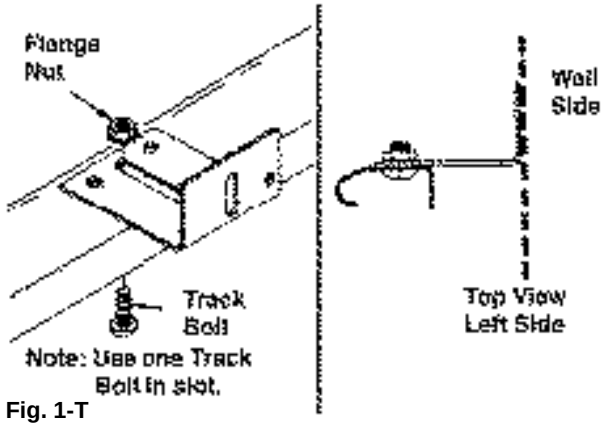

Fig. 1-T

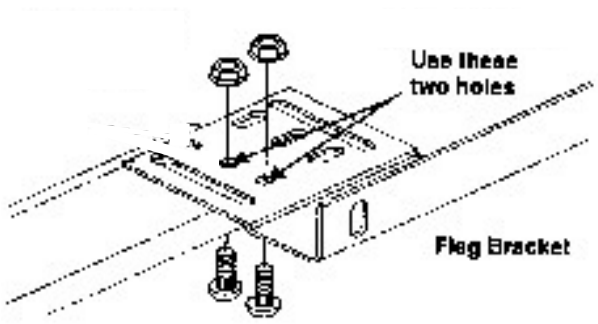

Fig. 2-T

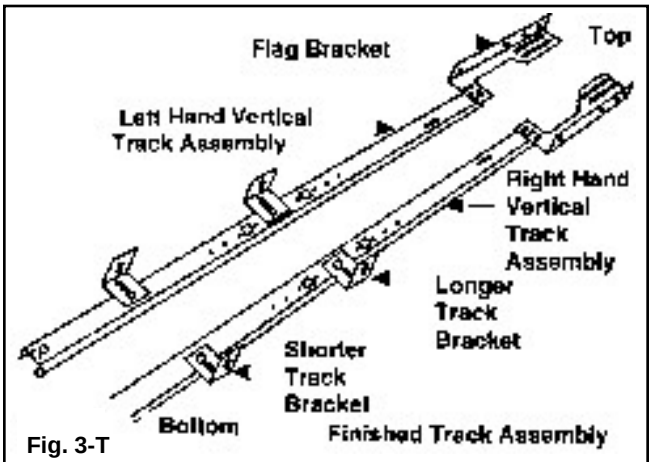

Fig. 3-T

and fasten the flag bracket and track brackets to the jamb with 5/16" x 1 5/8" lag screws. The flag bracket requires three screws, one each in the top, middle, and bottom holes. Do this for both sides of the door. When the track brackets and flag brackets are securely fastened to the jamb, tighten the track bolts and flange nuts connecting the flag brackets to the tracks. (FIG. 4-T)

**NOTE:** The tops of the vertical tracks must be level with each other. Check this by measuring from the top of the door sections to the top of the

track on both sides. If they are not equal, cut some material off the bottom of one track to lower it or raise the other track.

**Do not raise the vertical track beyond the bottom rollers on the bottom section of door.**

**Step 4:** Fasten the horizontal angle to the horizontal (curved) track with two 1/4" x 5/8" track bolts and 1/4" flange nuts so that the heads of the track bolts are on the inside of the track. On some doors this angle may be 82" long and will require three additional fasteners per side. If the angle has been pre-assembled, skip Step 4 and proceed with Step 5. (FIG. 5-T)

**Step 5:** Temporarily support the rear end of the track with a rope from the trusses overhead in the garage or on a tall ladder. (FIG. 6-T)

**Step 6:** Place the track over the roller in the top bracket. Attach the curved end of the horizontal track to the flag bracket with two 1/4" x 5/8" track bolts and 1/4" flange nuts so that the heads of the screws are on the inside of the track. Attach the end of the horizontal angle to the top of the flag bracket with a 3/8" x 3/4" carriage bolt and 3/8" hex nut. The horizontal and vertical track must join together to form a continuous channel for the rollers. (FIG. 7-T)

**Step 7:** Rear track hangers need to be made at this time. Use 1 1/4" x 1 1/4" punched angle, 13 gauge or 3/32" steel. These are not provided with the standard hardware. They are used to attach the rear of the horizontal track to the ceiling joist. Enough angle iron or punched angle should be purchased to make two rear track hangers. These hangers must be strong enough to hold the full weight of the door. Attach a bolt at least 1" long through the end of each track to stop the door at the end of its travel. (FIG. 8-T)

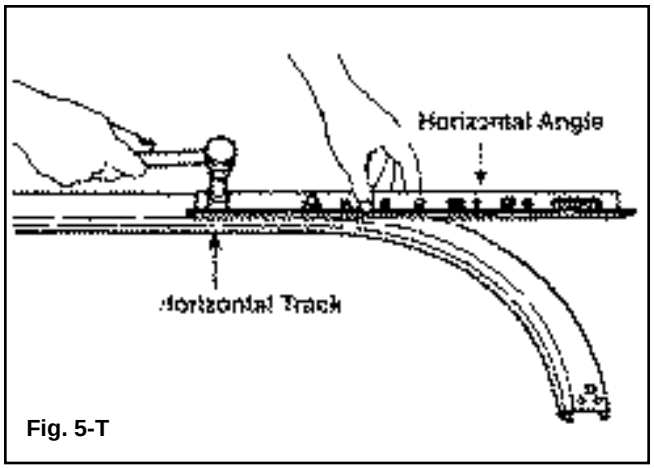

Fig. 5-T

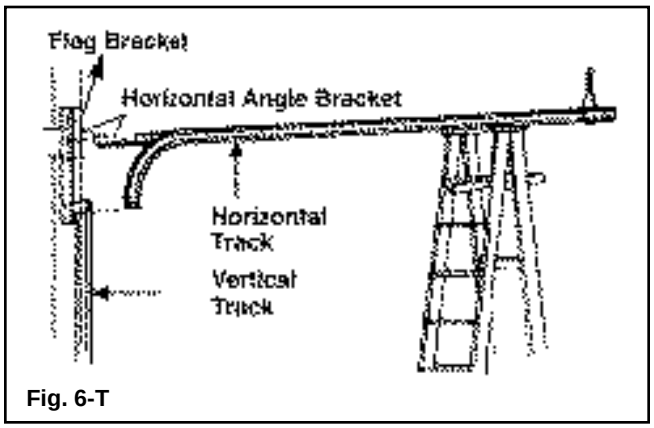

Fig. 6-T

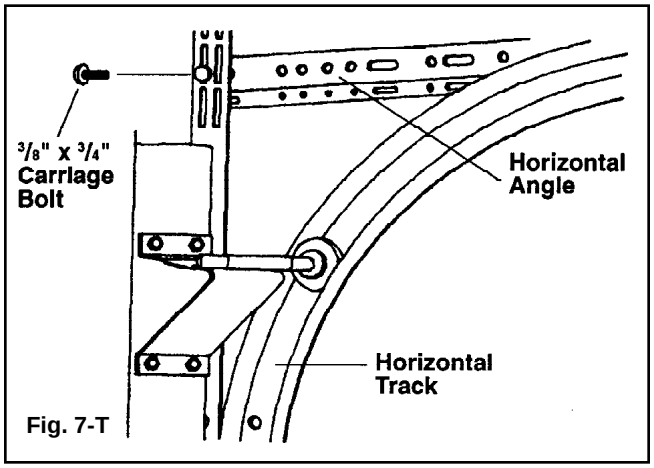

Fig. 7-T

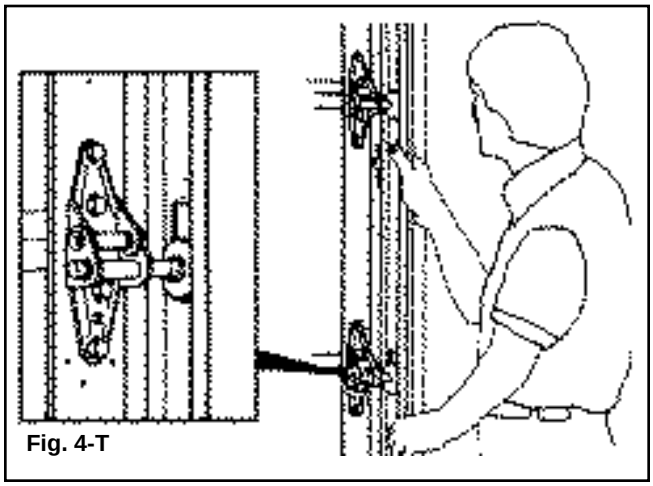
Fig. 4-T

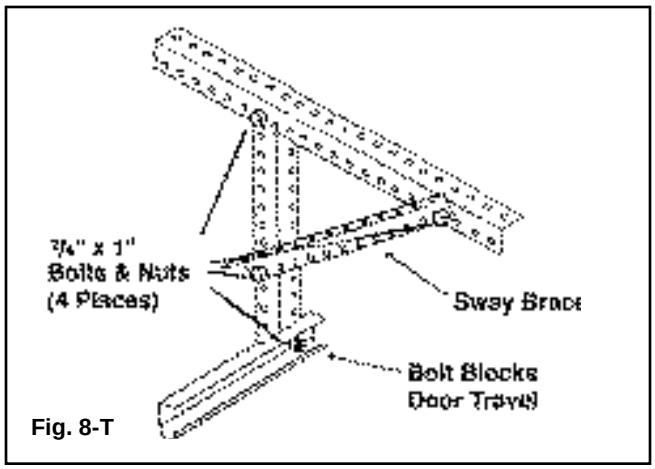

Fig. 8-T

**WARNING**

**Sway braces must be used to prevent tracks from spreading and allowing door to fall. Bolts placed in the end of each track (FIG. 8-T) must be at least 1" long to prevent the top section from exiting the track.**

**NOTE:** Rear track hangers should not be mounted any further than 6" from the end of horizontal track.

**Step 8:** Placement of rear track hangers is critical for the door to operate properly. The rear track hangers should hold the horizontal track level and square to the door. Squareness should be measured by comparing two diagonal distances: 1) the distance from the top left hand corner of the door to the rear of the right hand horizontal track and 2) the distance from the top right hand corner of the door to the rear of the left hand horizontal track.

Adjust the position of the tracks if the squareness distances are not within $^1/_2$" of each other. Horizontal track can be out of level up to 1" from front jamb to rear track hanger. (FIG. 9-T)

When the track is square and level with the opening, the track hangers can be fastened permanently to the ceiling trusses. Three $^5/_{16}$" x $1^1/_2$" lag screws are recommended. Be sure $^3/_{16}$" pilot holes are drilled before installing $^5/_{16}$" lag screws. The attachment must be strong enough to hold the weight of the door.

**WARNING**

**Use adequate length screws to fasten rear track hangers into trusses. Door may fall and cause serious injury if not properly secured.**

**Step 9:** With the track installed, the top door section can now be properly adjusted. With the slide on the top bracket loose, force the top of the door against the stop molding or door jamb. Pull the roller towards you so it is tight against the groove in the track and tighten the slide bolts. (FIG. 10-T & 11-T)

**Step 10: Completing the Lock Assembly**
(doors with locks only)

**NOTE: If your door is going to be equipped with an automatic garage door opener, make sure that the door is always unlocked when the opener is being used. This will avoid damage to the door.**

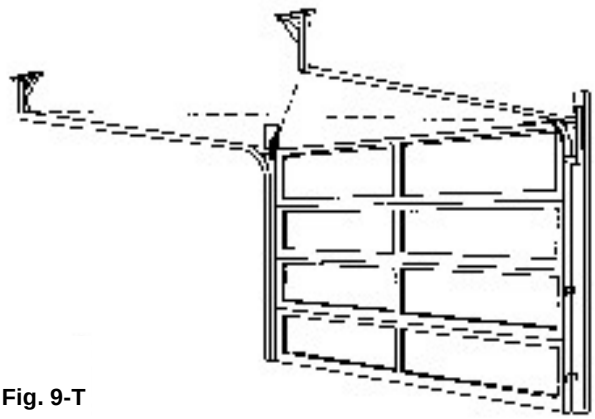

Fig. 9-T

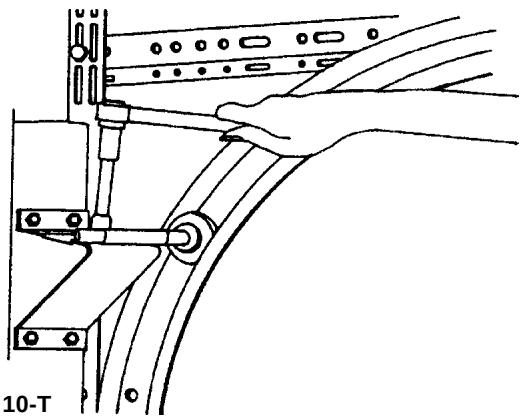

Fig. 10-T

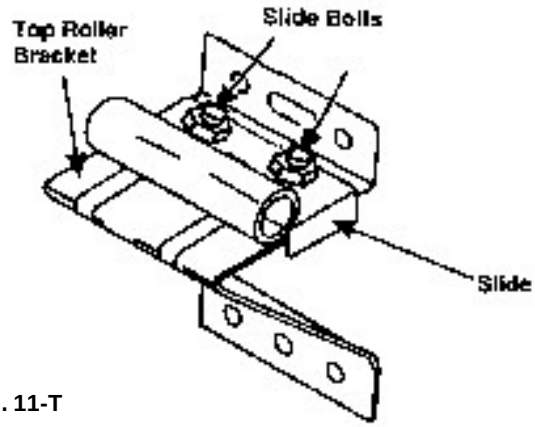


Fig. 11-T

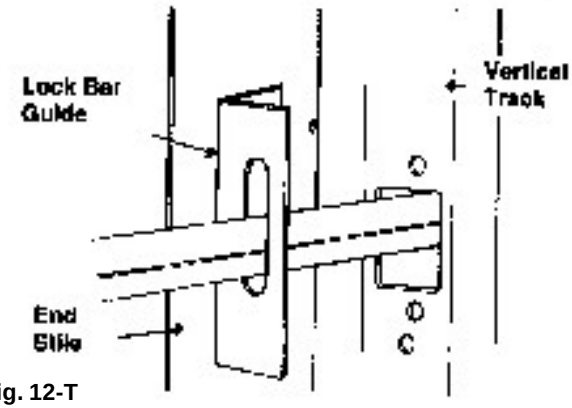


Fig. 12-T

## #3 Lock Bar
## ASSEMBLY INSTRUCTIONS FOR LOCK BAR GUIDES

Adjust the lock bar guides so that the lock bars enter the lock holes in the vertical track at both sides of the door. Fasten each lock bar guide with two 1/4" x 1" lag screws. (FIG. 12-T)

## #1 Snap Latch
## Assembly Instructions For Spring Latches and Striker Plates

**NOTE:** If attaching an automatic garage door opener, the spring latches and striker plates should not be installed.

**Step 1:** Once the door is completely assembled attach the striker plate (1) to the track using two 1/4" x 5/8" track bolts (2) and two 1/4" flange nuts (3). Insert bolts through the two 9/32" holes located top and bottom of the large knock-out. NOTE: Be sure the striker plate wraps around the back of the track as shown. Do not tighten. (FIG. 13-T)

**Step 2:** Place the spring latch (4) on the end stile of the door section and align the spring latch with the striker and the holes in the stile. Secure using two 1/4" x 1" lag screws (5). Make sure that the striker fits around the spring latch and secure in place.

**Lock Cables**

**NOTE:** If the lock is located in the center of the door width, cut lock cable (6) in half and go to Step 3.

**Step 1:** Rotate the inside release handle counter clockwise until it stops. Measure from the top left hole in the handle to the end of the left spring latch.

**Step 2:** Take the lock cable (6) and, using the measurement just obtained, measure from the inside of the cable stop (7) and cut cable.

**Step 3:** Thread the cable through the left hole in the top of the inside release handle from the underside until the stop button comes into contact with the handle. Extend the cable to the left spring latch and feed the end of the cable into the hole as shown, and secure in place with one 1/4" x 5/8" track bolt (2) and 1/4" nut (3).

## #1 Snap Latch

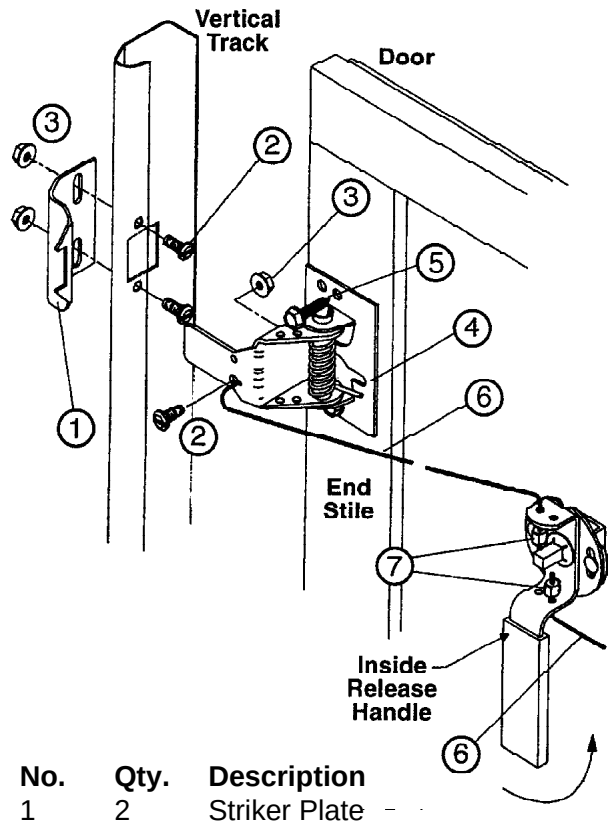


| No. | Qty. | Description |
|---|---|---|
| 1 | 2 | Striker Plate |
| 2 | 6 | 1/4" x 20 x 5/8" Track Bolt |
| 3 | 6 | 1/4" - 20 Hex Washer-Head Nut |
| 4 | 2 | Spring Latch |
| 5 | 4 | 1/4" x 1" Lag Screw |
| 6 | 1 | Lock Cable (to be cut) |
| 7 | 2 | Cable Stop (pre-painted) |

**Fig. 13-T**

**NOTE:** Be sure to pull cable taut before securing in place.

**Step 4:** Repeat for other side using the remaining cable and the right hole on the lower part of the handle. Some torsion spring doors only have one cable.

### #2 Slide Bolt

The slide bolt is installed on the inside end stile of the second section using (4) 1/4" x 1" lag screws. The slide bolt rests against the top of one of the rectangular engaging slots in the vertical track. Proper alignment is easier to achieve by using track as a guide. (FIG. 14-T)

**NOTE:** 3/16" holes may have to be pre-drilled before installing screws.

### Pull Rope (Manually Operated Doors)

**Step 11:** For manually operated doors only, drive the #6 eye screw into the jamb approximately 40 inches from the floor. Tie one end of the rope to the bottom roller shaft and the other to the eye screw. (FIG. 15-T)

**WARNING**

**In order to avoid the risk of injury or strangulation, the pull rope must be removed when an electric opener is installed.**

**Step 12:** At this time, remove the 3" nails which were used to hold sections in place prior to installation of the track assembly. (Refer back to FIG. 19.)

## Attaching Diagonal Braces

If your door includes diagonal braces, install them according to the following procedure. If your door did not come with diagonal braces, proceed with the springing installation instructions. If you are installing an EZ-Set Extension Spring™ or an EZ-Set Torsion Spring™ go to the instructions provided in the spring kit. For Extension Springs go directly to page 25 and the Torsion Springs refer to page 28.

**Step 1:** Raise door slightly and place a 2" block of lumber under center of door. Allow door to rest on block.

**Step 2:** Remove one nut from lower leaf of end hinges between bottom and #2 section. Position brace over bolt and replace nut. (FIG. 1-D)

**Step 3:** Using the holes in the ends of the diagonal brace as a template, drill 1/8" pilot holes and fasten other end of each brace to bottom of door with 1/4" x 1" lag screws provided. See door illustrated on page 7 for final diagonal brace installation.

**Step 4:** Remove the block and proceed to springing installation instructions. If you are installing an EZ-Set Extension Spring™ or an EZ-Set Torsion Spring™ go to the instructions provided in the spring kit. For Extension Springs go directly to page 25 and the Torsion Springs refer to page 28.

### #2 Slide Bolt

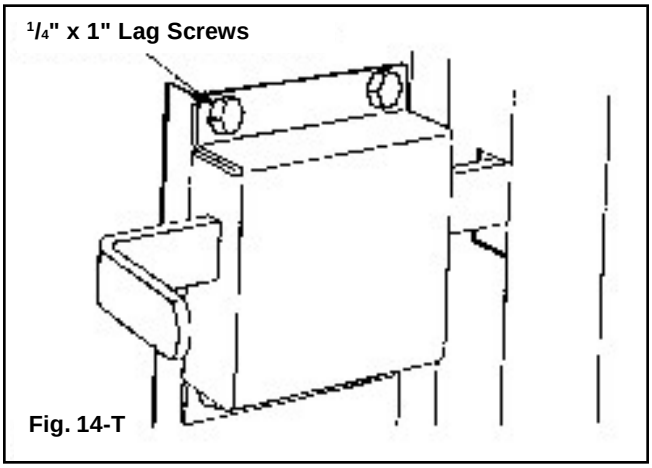

Fig. 14-T

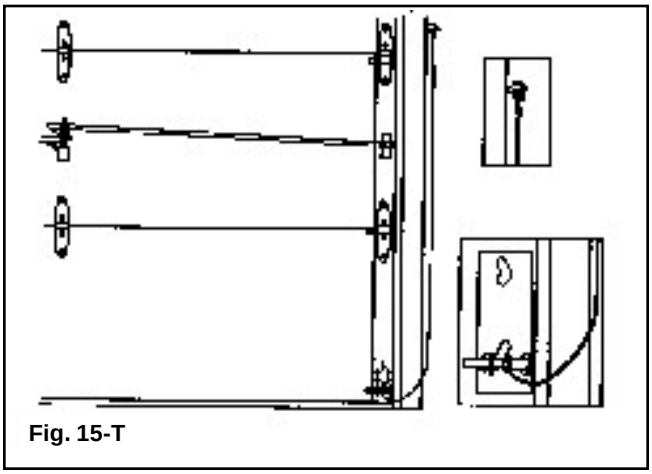
Fig. 15-T

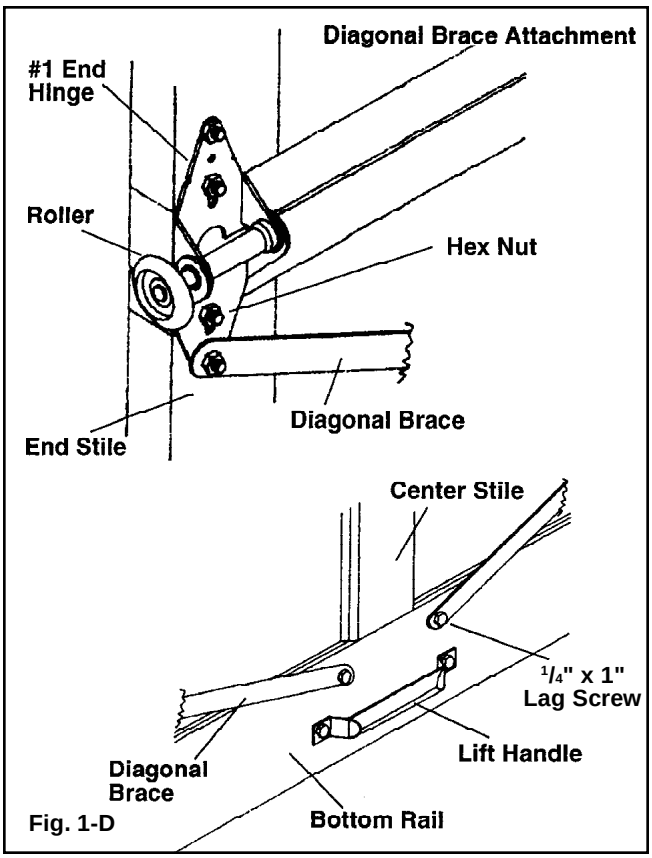

Fig. 1-D

# Assembling and Installing Extension Springs

*Use these instructions for Extension Springs only.*

**Step 1:** Some doors will be supplied with two springs and some will have four. Assemble springs with sheaves on the floor. It is easier to attach the spring to the eye bolt and then attach sheave assembly. A $^3/_8$" x $1^1/_4$" bolt and nut are used to attach the sheave. (FIG. EXT-1)

**NOTE:** If your door was supplied with four extension springs, take notice of the color coding on the ends of the springs. If there are two color codes, be sure to use one of each on either side so that the spring tension is equal on both sides.

**Step 2:** Attach a sheave in the third hole on the angle approximately 4 inches from the wall on both sides. Use a $^3/_8$" x $1^1/_4$" bolt, $^3/_8$" washer and nut. The head of the bolt must be on the door side. (FIG. EXT-2)

**Step 3:** Attach the eye bolts with one $^5/_{16}$" nut on each side of the rear hanger. The eyebolts should be about 12 inches above the track to keep the spring assembly from dragging on the track. The eyebolts can be as low as 4 inches above the track if you have space problems. Tighten the eyebolt nuts. (FIG. EXT-3)

**Step 4:** Carefully raise the door and prop it about halfway open. (FIG. EXT-4)

**WARNING**

**This is the first time the new door is being opened. If the tracks are not correctly aligned or the back hangers are not strong enough the door may fall. Also, the door will be very heavy without the help of the springs. Have two or more people help you. Proceed slowly and carefully.**

Check to be sure the horizontal tracks are parallel with each side of the door. With the door about halfway open, make sure the rollers do not come out of the top brackets more than about $^1/_2$". If adjustment of the rear hangers is necessary, lower the door first because the weight of the door is supported by the rear hangers.

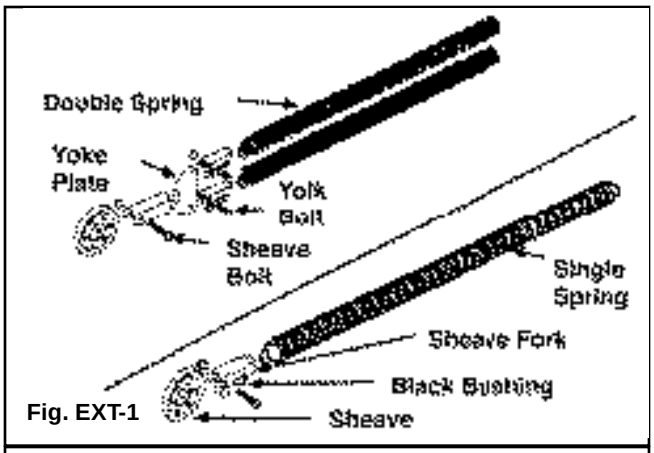

Fig. EXT-1

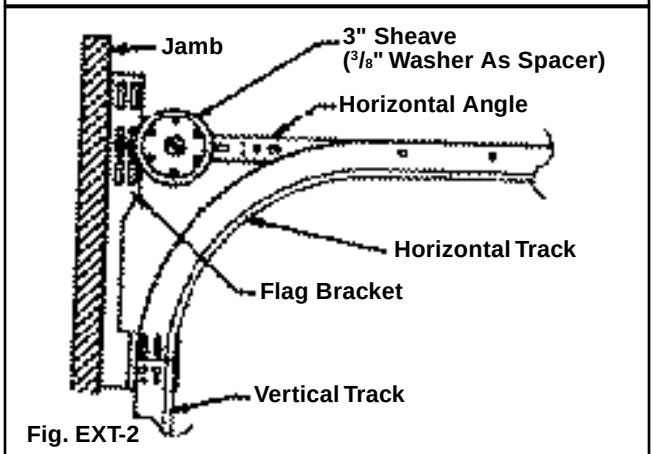

Fig. EXT-2

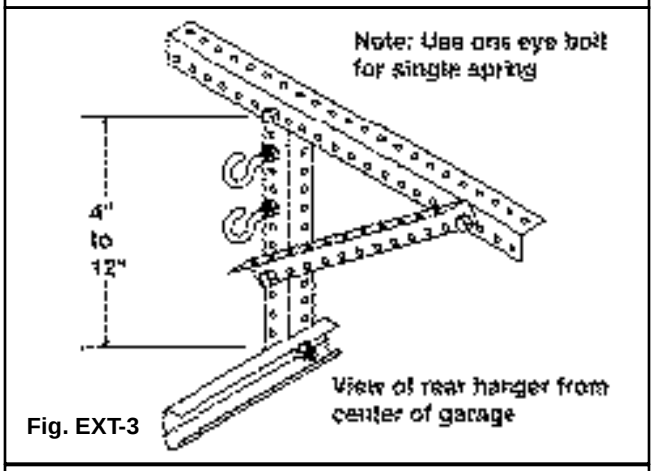

Fig. EXT-3

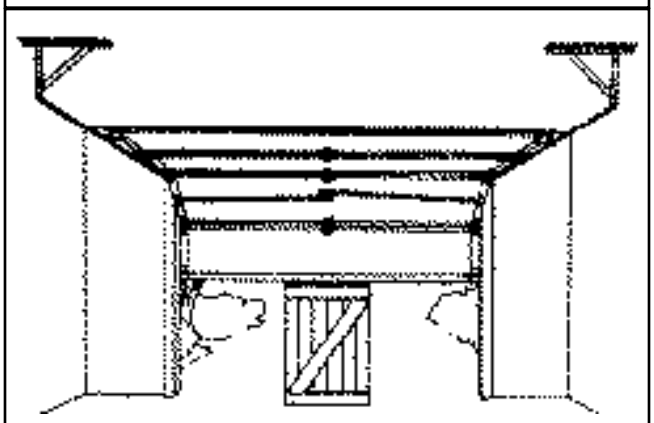
Fig. EXT-4

**Step 5:** Carefully raise the door to fully open position. Place “C” clamps on both sides of the track below the bottom rollers to keep the door from falling closed. (FIG. EXT-5)

Check again to be sure the horizontal tracks are parallel with the edges of the door. The rollers must not come out of the hinges or brackets.

**Step 6:** Hook the ends of the springs over the eyebolts at the rear track hangers.

Attach the loop of a cable over the button on the bottom bracket, if not done so already. Thread the cable up over the stationary sheave. (FIG. EXT-6)

Continue the cable over and around the sheave on the springs. (FIG. EXT-7)

**Step 7:** Tie the cable to the three hole adjusting clip exactly as shown in FIG. EXT-8A. Hook the cable to the horizontal angle with an “S” hook. Adjust the knot at the three hole adjusting clip. Adjust so that all spring tension is relieved and the cable holds the springs above the horizontal track. The springs should be stretched the same on both sides of the door. (FIG. EXT-8A)

**Important:** Attach the warning tag found in the white envelope with orange print to the spring assembly (this tag may already be attached). (FIG. EXT-9)

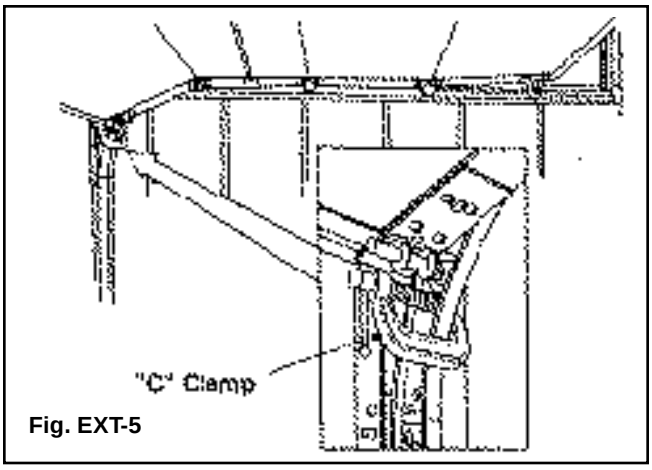

Fig. EXT-5

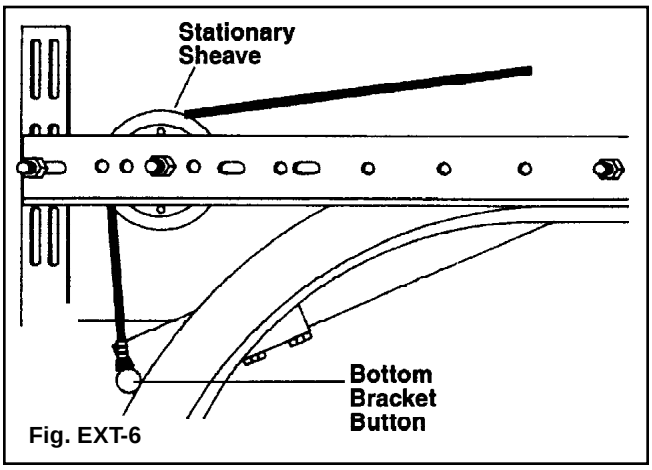

Fig. EXT-6

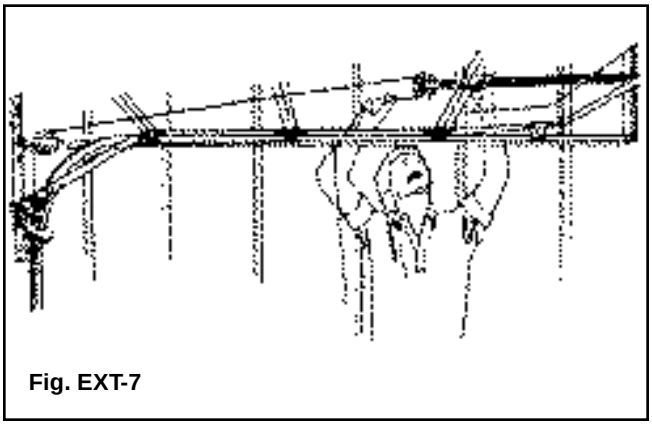
Fig. EXT-7

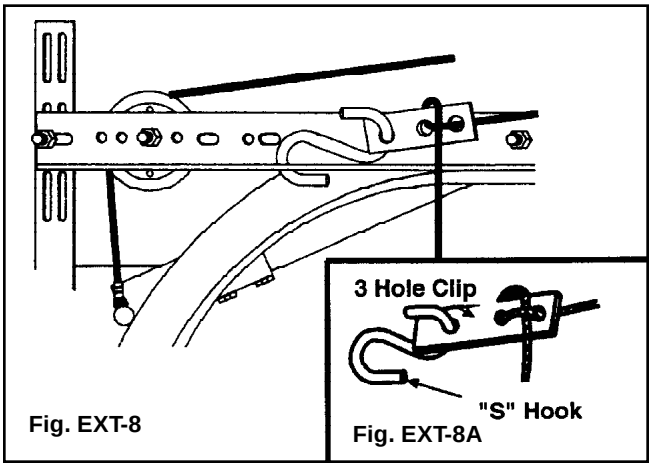

Fig. EXT-8

Fig. EXT-8A

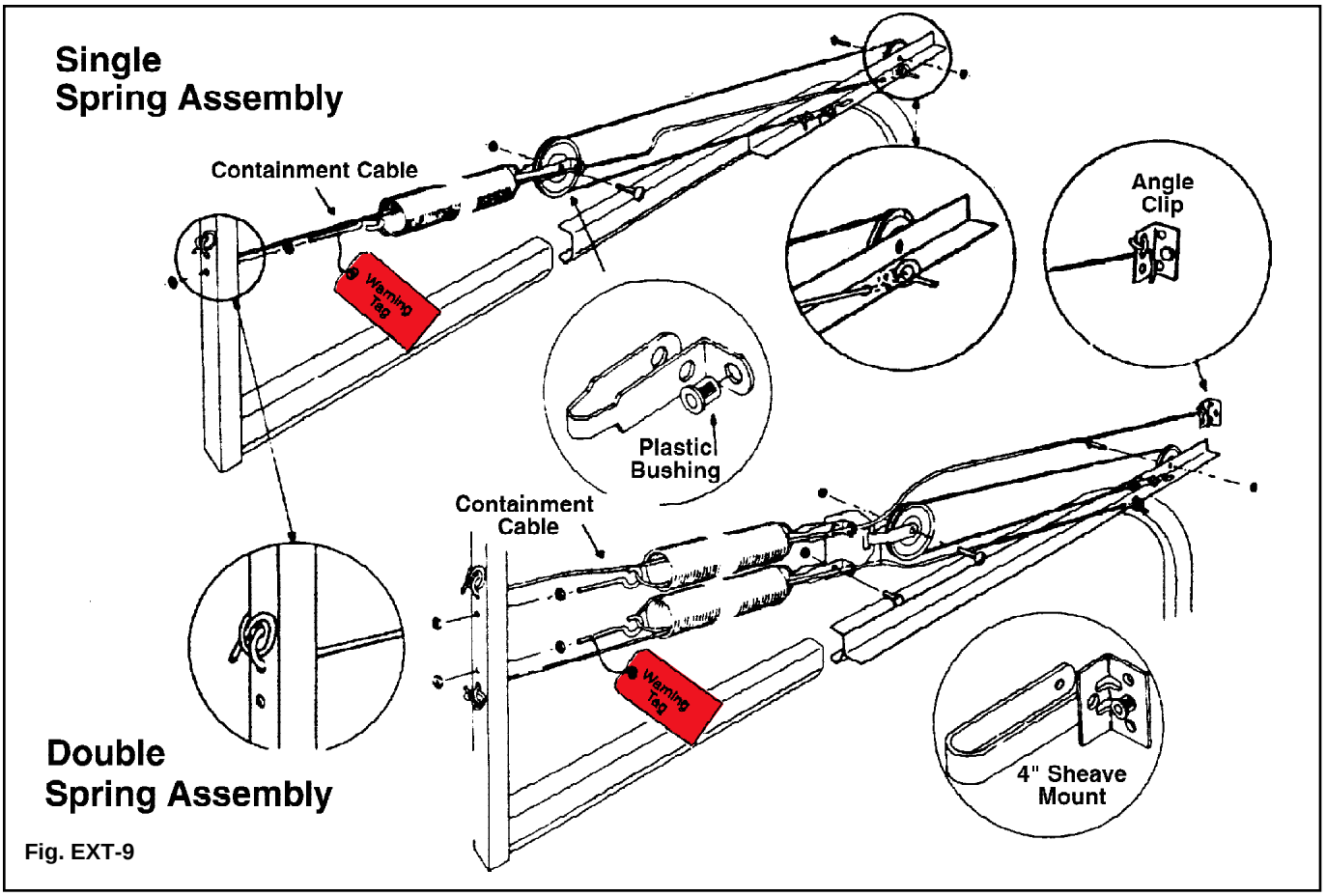

Fig. EXT-9

# Installing Safety Containment Kit

**WARNING**

**Garage door extension springs can cause serious injury and property damage if they break under tension and are not secured with safety cables. Do not neglect the following step.**

**Step 8:** Tie one end of the 1/8" containment cable to the rear track hangers. Tie the cable as shown in the illustration (FIG. EXT-9). Thread the cable through the center of the extension spring and through the black bushing in the sheave fork. Tie the remaining end to the horizontal angle as shown. This must be done for each of the springs.

**NOTE:** If your door has four extension springs, tie the upper containment cable to an angle clip mounted to the jamb. (FIG. EXT-9)

# Torsion Spring Installation

| Winding Chart | |
|---|---|
| Door Height | Spring Turns |
| 6'0" | 6.75 |
| 6'3" | 7.00 |
| 6'6" | 7.25 |
| 6'9" | 7.50 |
| 7'0" | 7.75 |
| 7'3" | 8.00 |
| 7'6" | 8.25 |
| 7'9" | 8.50 |
| 8'0" | 8.75 |

**Number of turns on the spring can be counted by drawing a chalk line on them. Doors with two springs are wound the same number of turns on each spring.**

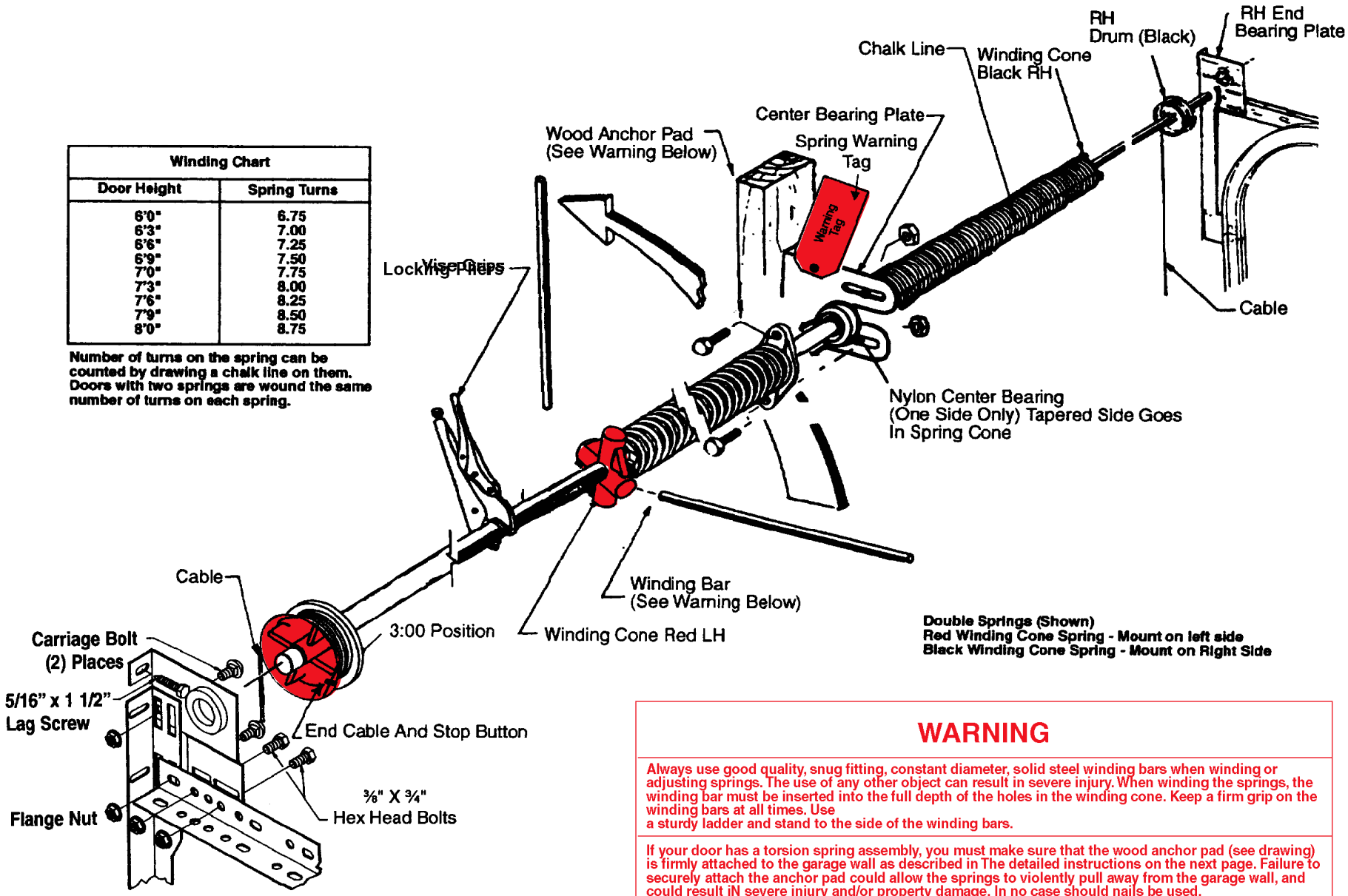


**Double Springs (Shown)**
**Red Winding Cone Spring - Mount on left side**
**Black Winding Cone Spring - Mount on Right Side**

## WARNING

Always use good quality, snug fitting, constant diameter, solid steel winding bars when winding or adjusting springs. The use of any other object can result in severe injury. When winding the springs, the winding bar must be inserted into the full depth of the holes in the winding cone. Keep a firm grip on the winding bars at all times. Use
a sturdy ladder and stand to the side of the winding bars.

If your door has a torsion spring assembly, you must make sure that the wood anchor pad (see drawing) is firmly attached to the garage wall as described in The detailed instructions on the next page. Failure to securely attach the anchor pad could allow the springs to violently pull away from the garage wall, and could result iN severe injury and/or property damage. In no case should nails be used.

Fig.TOR-1

# Torsion Spring Installation

*Use these instructions for Torsion Spring only.*

**PRECAUTIONS**

**WARNING**

**Torsion springs can be very dangerous if they are improperly installed or mishandled. Do not attempt to install them yourself unless 1) you have the right tools and reasonable mechanical aptitude or experience and 2) you follow these Instructions very carefully.**

Tools Required for Torsion Spring Installation:
1. Drill
2. $^{3}/_{16}$" drill bit
3. Two $^{9}/_{16}$" box wrenches
4. $^{7}/_{16}$" socket wrench
5. $^{3}/_{8}$" box wrench
6. Two $^{1}/_{2}$" diameter, 18" long cold rolled solid steel winding bars
7. Locking pliers

## Step 1

**It is important that the torsion spring assembly be firmly and securely attached to the frame of the garage.**

Refer to Figure 8, page 14 for the configuration of 2" x 6" wood jambs. **Important:** The wood anchor pad must be made of a Grade 2 or better Southern Yellow Pine (also known as Southern Pine or Yellow Pine). The Southern Yellow Pine must be free of splits and cracks. **Do not use wood labelled as Spruce Pine Fir (or SPF).**

Each side jamb and the center anchor pad should extend 12" above the top of the opening for 12" radius horizontal track and 15" above the top of the opening for 15" radius horizontal track.

The wood anchor pad must be installed into the frame of the garage with at least four $^{3}/_{8}$" x 4" long lag screws (one at each corner). The four lag screws must be installed no closer than $1^{1}/_{2}$" from the sides and the ends of the 2' x 6'. These lag screws must fasten into the wood frame of the garage, not the drywall or sheet rock. The wood anchor pad and $^{3}/_{8}$" x 4" lag screws are not supplied. **Do not use nails.**

**NOTE:** The wood anchor pad can be off-center to the width of the opening by up to 10" in either direction.

## Step 2

Lock the door in the down position securely. This must be done to prevent the door from prematurely opening which could cause an injury!

**NOTE:** You need an assistant in Step 4. If your garage has only one entrance, be sure you, the assistant, and the tools you need are inside before you lock the door. Your door will have either one or two torsion springs. Each torsion spring consists of spring coils, stationary cone, and a winding cone (FIG. TOR-1). The spring coils are color coded depending on the spring size and the **winding cone** is color coded separately, either **red** or **black**. The color on the winding cone is to help identify on which side of the door the spring is to be used.

**Black winding cone torsion springs are used on the right side of the door and red winding cone torsion springs are used on the left side of the door when viewing the door from the inside looking out. Failure to install the torsion springs on the correct side will cause your door to function improperly and could result in serious injury. (NOTE: If you have low headroom, these instructions DO NOT APPLY. Consult supplemental low headroom instructions.)**

Slip the torsion springs onto the spring tube. The **red** winding cone on the **left** end, the nylon center bearing, center bearing plate, and the **black** winding cone torsion spring on the **right** end (FIG. TOR-2). Cable drums go on next. The **red** drum on the left, **black** drum on the right. The set screws on the drums face the springs.

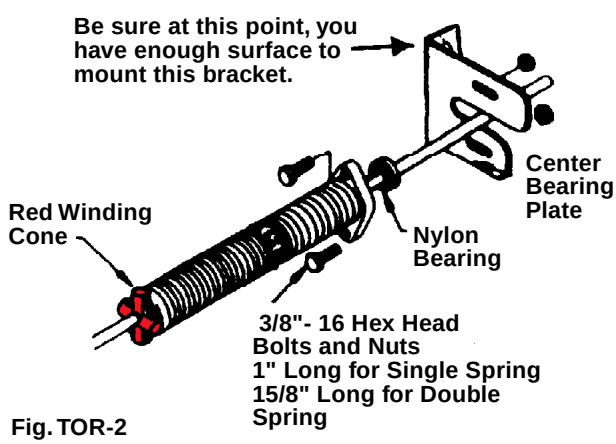


Fig. TOR-2

## Step 3

Fasten the bottom of the end bearing plate to the horizontal angle with (2) $^3/_8$" x $^3/_4$" long hex head bolts and hex nuts. The bottom of the end bearing plate is identified by two parallel rows of two slots. Please make sure to use the bottom two slots for 12" radius horizontal track, and the upper two slots for 15" radius horizontal track. When properly mounted the torsion tube is level and straight. (FIG. TOR-3)

**Before installing any lag screws, it is important to drill $^3/_{16}$" pilot holes where the lag screws are to be attached.** Fasten the wall flange on the end bearing plate to the wood jamb with (1) $^5/_{16}$" x 1$^5/_8$" long lag screw. Drill $^3/_{16}$" pilot holes where lag screws are to be installed. On 12" radius horizontal track, each end bearing plate should also be attached with $^3/_8$" x $^3/_4$" carriage bolts and $^3/_8$" nuts. (FIG. TOR-3)

## Step 4

With an assistant, lift the complete torsion spring tube assembly and slide the ends of the tube into the bearing on the end bearing plates. With the tube level, mount the center bearing plate to the center anchor pad using (2) $^5/_{16}$" x 1$^5/_8$" long lag, red-coated screws.

**NOTE:** Red coated fasteners must be installed for the attachment of center bearing plate to indicate this part will be under extreme tension once spring is wound. (FIG. TOR-4)

Before mounting the center bearing plate, drill (2) $^3/_{16}$" pilot holes for the lag screws. These pilot holes must be no closer than 1$^1/_2$" from the sides and ends of the wood anchor pad. The center bearing plate resists the considerable counter torque of the springs. This wood anchor pad must be installed to the frame of the garage as stated in **Step 1.**

## Step 5

The cable that is attached to each bottom bracket is brought up between the wall and roller shafts to the cable drum. This cable is placed in the notch on the cable drum. Turning the cable drum and sliding it up tight against the end bearing plate removes the cable slack. **Make sure the cable follows the groves in the cable drum.** The set screws on the cable drum should be tightened with a $^3/_8$" box wrench while holding the cable taut. Locking pliers clamped to the torsion spring tube maintain tension on the cable. (FIG. TOR-1) This procedure should be repeated on the opposite side.

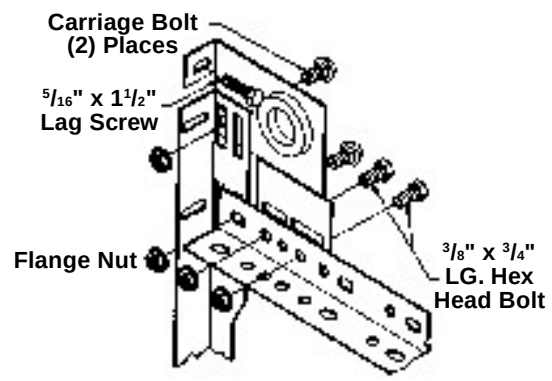


Fig. TOR-3

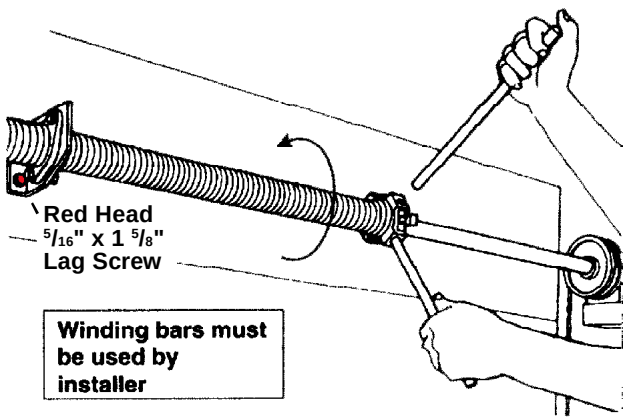


Fig. TOR-4

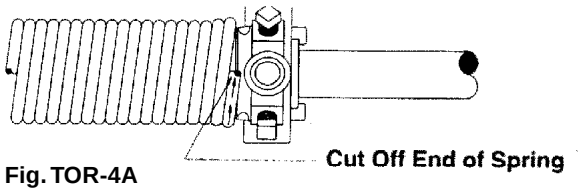


Fig. TOR-4A

## Step 6

Draw a chalk line across the spring(s). This will be used to indicate the number of turns on the spring(s). After inserting the two winding bars all the way into the winding cone, wind the springs $^1/_4$ turn at a time in an upward direction as shown in FIG. TOR-4. The number of turns is shown in the table in FIG. TOR-1. The tail of the torsion spring coil points in the direction that the spring is wound. (FIG. TOR-4A)

**WARNING**

**NEVER use screwdrivers or other substitutes for winding bars! Stand to the side of bars. Be sure to insert the bars all the way into the hole.**

Secure each spring with the set screws on the winding cone. (**Caution:** Set screws should be turned from 3/4 to one full turn after they have made contact with the tube.) On doors with two torsion springs, each torsion spring should be wound the same number of turns. Remove the locking pliers.

### Step 7

Unlock the door, slowly raise the door and prop it about halfway open.

**WARNING**

**This is the first time the new door is being opened. If the tracks are not correctly aligned or the back hangers are not strong enough, the door may fall. Proceed slowly and carefully.**

Check to be sure the horizontal tracks are parallel with each side of the door. Make sure all the lag screws are securely fastened. With the door about halfway open, make sure the rollers do not come out of the top brackets more than about 1/2 inch. If adjustment of the rear track hanger is necessary, the door must be locked in the closed position because the weight of the door is supported by the rear hangers.

**NOTE:** If the torsion springs do not increase in tension as the 1/4 turns are added to the springs, then you probably have the torsion springs reversed. (See **Step 2.**)

### Step 8

To adjust torsion spring tension, the door is locked in the down position. With locking pliers clamped on the torsion tube, winding bars are used to wind the springs tighter to increase tension. Tension is reduced by removing turns. When two springs are used, both sides should be adjusted the same. Adjustments should be made in 1/4 turn increments.

**WARNING**

**NEVER adjust center bearing plate or red-coated fasteners after springs are wound. Be prepared to handle a strong force when reducing tension on a torsion spring. Use winding bars only, and stand to the side.**

# Maintenance/Adjust./ Options

## Checking & Adjusting the Door

**The door should open and close easily.** With proper adjustment the door will hang into the opening 4" to 6". An electric opener can be adjusted so the door is pulled completely even with the opening. If the door is difficult to open but falls closed, more spring tension is required. If the door opens by itself and is difficult to close, less spring tension is required.

**To adjust extension spring tension,** use two “C” clamps to carefully clamp the door in the open position. Tension can be changed by moving the “S” hooks to different holes in the horizontal track angles or by adjusting the cable in the three hole clip. Both sides must be adjusted equally. Moving the hooks closer to the door opening increases tension.

Tension can also be adjusted slightly by releasing spring tension and relocating the eyebolts higher on the track hanger. When reinstalling, the higher the eyebolt, the greater the tension.

**WARNING**

**Use extreme care when readjusting extension springs and make sure that the door is carefully secured by “C” clamps in the open position before you begin. When the door is closed, the springs and mounting hardware are under extreme tension and are potentially dangerous.**

Binding of the door near closed and/or open position requires the track positioning to be checked. The track can be moved away from the door by adjusting the jamb or flag brackets. Care must be taken that the rollers remain in the hinges and do not come out of top roller brackets. Binding can also occur if the molding is attached too tightly against door. The door stop molding should be repositioned lightly against the door. Allow the thickness of a dime between the door stop molding and the door.

**Do not attempt to adjust or repair torsion springs. You may not be prepared to handle the release of spring forces. Call a professional door service company for repairs or adjustments.**

# Maintenance

**Important: Refer to the safety information on Pages 3 & 4 before attempting any maintenance or repairs.**

Annually do the following:

## Lubrication

Lubricate all moving parts of the door with light household oil, including:

- Lift cables at the bottom bracket button,
- Bearing of the sheaves,
- Lock hardware where surfaces turn or slide,
- Full length of torsion spring to reduce friction between coils,
- Lubricate steel rollers. **DO NOT** lubricate nylon rollers.

## Check Door Hardware

1. Check for loose or bent hinges.
   - Tighten loose hinges.
   - Straighten or replace bent hinges.

   **Caution:** To replace bent hinge(s) or broken roller(s):

   A) Door must be locked and in the down position.

   B) No more than one hinge is to be removed from the door at any given time.

   C) Under no circumstances should you loosen or remove the bottom bracket without disengaging the spring tension. (Follow instructions on page 10 for removing extension springs.)

2. Check roller for broken wheels, bent shafts, or worn out bearings.

3. Check the door and track supports for loose or missing bolts, screws, etc., and tighten. Be careful not to overtighten.

4. Check the cable assembly. Are they running properly in the sheaves? Check for wear of the cable at the bottom bracket button.

5. Check for bent track. If bent, call an authorized professional dealer.

6. Extension spring hardware (see page 7) which includes springs, cables, sheaves, sheave forks, bottom brackets, and containment cables should be adjusted or repaired only when the spring tension is released (the door must be open), and these repairs should be made by a qualified door technician or a mechanically experienced person with proper tools and instructions.

7. If your door has standard torsion springs (see page 6), the spring assembly and wood anchor pad should only be adjusted or repaired by a professional door technician.

# Replacement Parts

Replacement parts are available from an authorized professional dealer or a building supply retailer.

When ordering repair parts, always provide the following: part name, model number, serial number (located on label on interior of door) door width and door height (W x H).

For the location of the authorized professional dealer or a building supply retailer nearest you, please write or call:

Clopay Building Products
Consumer Services Dept.
312 Walnut St., Ste. 1600
Cincinnati, OH 45202-4036 USA

Call Toll Free:1-800-225-6729

Hours of Operation (Eastern Time):
Monday – Friday, 8:30 am-8 pm
Saturday 8:30 am - 5 pm

Voice Mail available for messages 24 hrs./day 365 days/yr. Call will be returned first business day following call.

# Painting and Finishing Instructions

## Preparation Work

**Important information:** Wood products can absorb moisture during shipping and storage. Do not leave or store unfinished doors outside. It is important that all sections be free of moisture prior to finishing the sections. Wood doors should not be finished under very humid conditions (storing the door in such an environment will void the warranty on the door). In order to ensure that all door surfaces are properly finished, it is recommended that the door sections be finished prior to installation. **Failure to properly finish all door section surfaces, including the sides, back, bottom, face, and joints, will void the warranty on the door.**

## Painting Your Door

**Step 1:** Fill any gaps or voids between wood surfaces with a caulking compound that can be painted.

**Step 2:** Clean all door surfaces with a stiff bristle brush to remove surface dirt, dust, and loose fibers.

**Step 3:** Before finish painting, the door section should be primed on all sides. Wood doors can be ordered either primed or unprimed (primed doors can be identified by the gray-white finish). If your door is pre-primed, proceed to Step 4 below. Prime all section surfaces using a quality oil or latex based exterior primer, taking care to observe the primer manufacturer's application instructions, including recommendations on temperature and drying time. If you are painting a redwood or cedar door, the primer should contain a tannen blocker. **Using a primer on redwood and cedar doors that does not contain a tannen blocker could result in discoloration of the door after painting.**

**Step 4:** Finish paint all door section surfaces using a quality oil or latex based exterior paint. **The finish coat base should be the same as the primer coat base** (i.e. a latex based finish paint is recommended for use with a latex based primer, and an oil based finish paint is recommended for use with an oil based primer). **If your door is factory primed, a latex based finish paint should be used.** Carefully follow all manufacturer's application instructions, including recommendations on temperature and drying time. A second top coat is recommended for optimum protection.

## Staining Your Door

Clopay door Model 32A (rough sawn wood flush door), Model 44 (raised redwood panel door), and some Reserve Collection doors can be stained to bring out the natural beauty of the wood. On Model 44 redwood panel door the frame is constructed of a hemlock/fir lumber and the panels are redwood. Not all woods absorb stain the same, therefore there may be some color differences between the frame and the panels.

**Step 1:** Select a quality exterior penetrating stain (transparent, semi-transparent, or solid) that is mildew resistant, UV resistant, and water repellant. Selection of a stain or finish that does not have these properties will void the warranty on the door. Avoid film-forming finishes, such as varnishes and urethanes, which do not penetrate the wood.

**Step 2:** Fill any gaps or voids between wood surfaces with a caulking compound that can be stained.

**Step 3:** Clean all door surfaces with a stiff bristle brush to remove surface dirt, dust, and loose fibers.

**Step 4:** Apply stain to all door section surfaces per stain manufacturer's instructions, including recommendations on temperature and drying time.

## Maintaining Your Painted or Stained Door

The two major contributing factors to the breakdown of the door's finish (ultimately resulting in rotting and warpage) are sun and moisture. Annually examine your door for any signs of paint finish cracking or peeling or for any cracks in the wood door section. If the door is painted, Clopay recommends that it be repainted every 1-2 years to protect or seal the door against the elements. Failure to do so will result in voiding of the warranty. If the door is stained, reapply stain as needed per the stain manufacturer's recommendations. In general, the clearer the stain, the more it will need to be reapplied.

Remember, the quality, properties, and composition of exterior paints and stains vary greatly among manufacturers and among different products. Fill in the form below and keep this manual to ensure compliance with Clopay recommendations and for future maintenance of your door finish.

Minor cracks in the wood should be repaired by filling in the area with an exterior grade caulk compound and then refinished following the previous instructions. Failure to repair cracks could potentially lead to more extensive section damage in the future. Gouges in the wood surface can be repaired with a wood filler. If extensive damage occurs to the door, Clopay recommends that the door section be replaced. Failure to do so could result in damage or injury to property or individuals in the garage.

# Attaching an Automatic Opener

**WARNING**

**To avoid risk of strangulation or personal injury to children, you must remove the pull down rope when you install an automatic garage door opener.**

**IMPORTANT:** When installing an automatic garage door opener, make sure to follow the manufacturer's installation and safety instructions carefully. **Do not install the pull down rope when attaching an automatic opener. The lock should be removed or disengaged to prevent damage to the door.** If attaching an operator bracket to the wood anchor pad, make sure the wood anchor pad is free of cracks and splits and is firmly attached to the wall. Always drill pilot holes before attaching lag screws.

To avoid damage to your door, you must reinforce the top section of the door in order to provide a mounting point for the opener to be attached.

You will need a length of 48" long of 1¼" x 1¼" punched angle (at least 13 gauge) and 21" long of 1¼" x 1¼" of punched angle (at least 13 gauge) from your local hardware store. Also, 6 - 8 ¼" x 1" lag screws are needed.

The following 4 situations show how punched angle is to be affixed and how many fasteners are required. The vertical reinforcement must be centered in the width of the door.

**NOTE:** The horizontal punched angle and strut (if required) are shown cut away for clarity only. DO NOT notch these pieces.

**NOTE:** The operator arm must be attached to the vertical angle at roughly the same height as the top roller of the door.

For attachment of the opener arm to vertical angle iron, use one ⅜" x ¾" bolt and two ⅜" nuts tightening one nut against the other to prevent the nuts from loosening on the bolt. Do not tighten the nuts against the opener arm (opener arm must be allowed to rotate freely.) (FIG. AO-4)

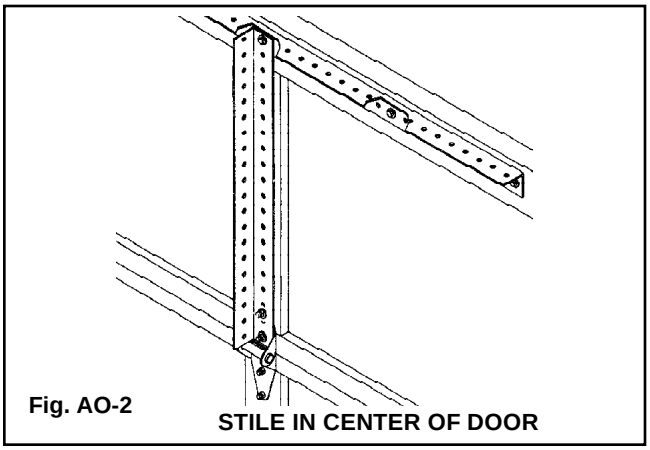


Fig. AO-2

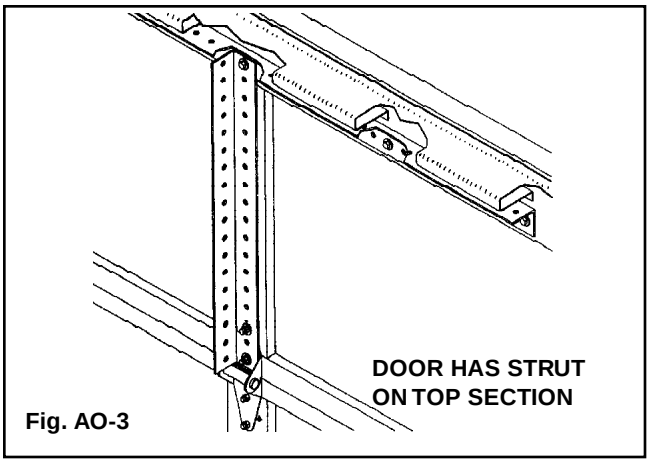


Fig. AO-3

OPENER ARM ATTACHMENT TO VERTICAL ANGLE

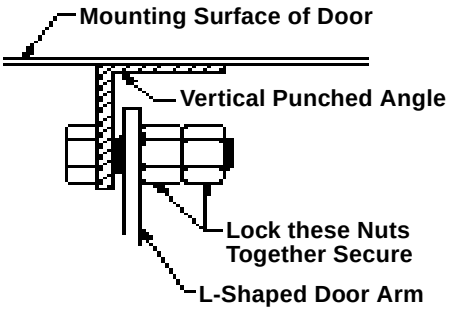


Fig. AO-4

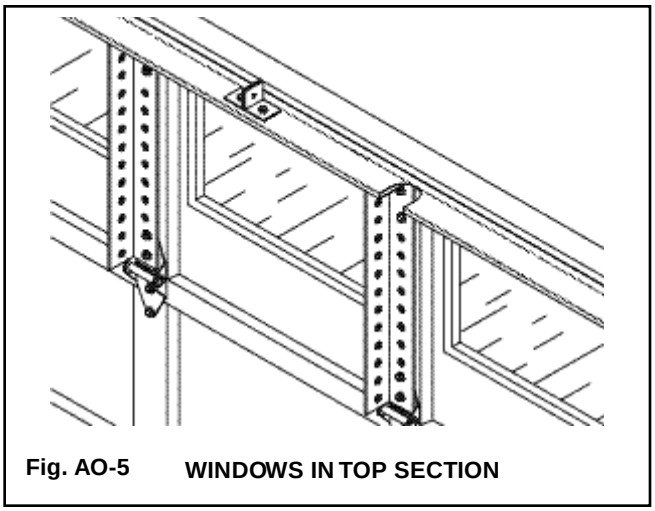


Fig. AO-1



Fig. AO-5 WINDOWS IN TOP SECTION

# LOW HEADROOM OPTIONS

| SPRING | OPTION | REDUCES HEADROOM REQUIREMENT TO: | How Can I Get This Option? |
|---|---|---|---|
| Extension/ EZ-Set Extension/ EZ-Set Torsion | Double Track Low Headroom | 4 1/2 inches (Extension/EZ-Set Extension) 9 1/2 inches (EZ-Set Torsion) | Order low headroom track. |
| Extension/ EZ-Set Extension/ EZ-Set Torsion | Double Track Low Headroom Conversion Kit | 4 1/2 inches (Extension/EZ-Set Extension) 9 1/2 inches (EZ-Set Torsion) | Available through most retail stores. Check with store for availability. |
| Extension/EZ-Set Extension/ EZ-Set Torsion | Quick Turn Bracket | 8" on 12" radius track | Order bracket & see below for instructions. |
| Torsion | Double Track Low Headroom Front Mount | 9 1/2 inches | Available from & should be installed by professional installer only. |
| Torsion | Double Track Low Headroom Rear Mount | 4 1/2 inches | Available from & should be installed by professional installer only. |

## Double Track Low Headroom

(Reduces headroom required to 4 1/2" on extension springs, 9 1/2" on front mount torsion springs) Instructions are provided with the track.

## Double Track Low Headroom Conversion Kit — Extension Springs

(Reduces headroom required to 4 1/2")

This option is designed to modify the standard track. Instructions are provided in the kit.

## Quick Turn Bracket

(Reduces headroom requirement to 8"on 12" radius track. Quick turn bracket cannot be used in conjunction with any other low headroom option.) This is used in place of the existing top roller.

1. Place two rollers in the tubes as shown (FIG. LHR-1). On some doors it will be necessary to try various roller positions to achieve the proper hinge location on the door.
2. Position the rollers and the bracket in the door track. Allow the hinged end of the bracket to come against the door. Apply sufficient pressure to be sure that the top of the door is closed tightly against the header.
3. Attach to the top of the door in the same manner as the original top roller bracket.
4. It may be necessary to relocate holes.

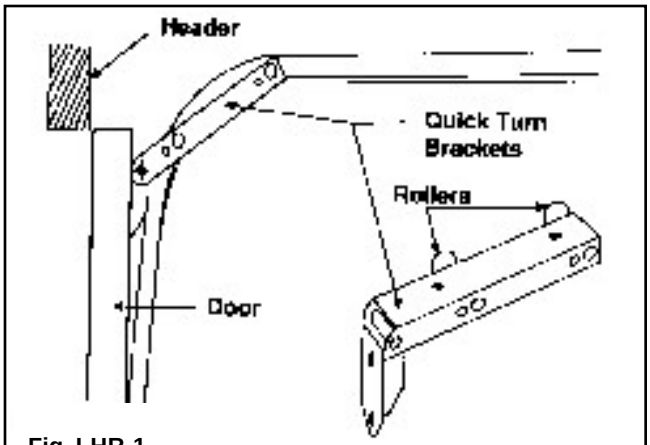

Fig. LHR-1

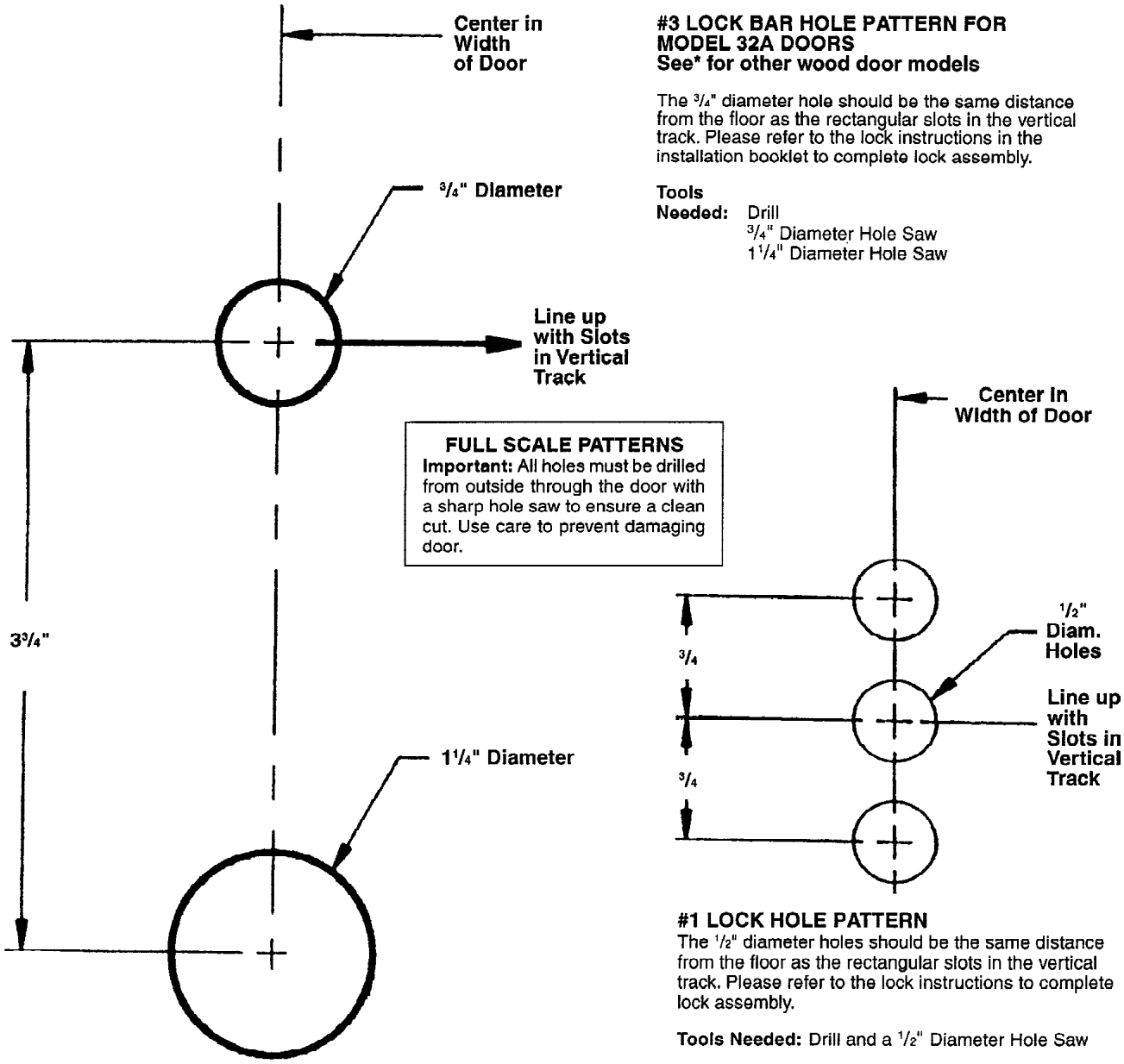


**#3 LOCK BAR HOLE PATTERN FOR MODEL 32A DOORS**
**See* for other wood door models**

The 3/4" diameter hole should be the same distance from the floor as the rectangular slots in the vertical track. Please refer to the lock instructions in the installation booklet to complete lock assembly.

**Tools Needed:** Drill
3/4" Diameter Hole Saw
1 1/4" Diameter Hole Saw

**FULL SCALE PATTERNS**
**Important:** All holes must be drilled from outside through the door with a sharp hole saw to ensure a clean cut. Use care to prevent damaging door.

**#1 LOCK HOLE PATTERN**
The 1/2" diameter holes should be the same distance from the floor as the rectangular slots in the vertical track. Please refer to the lock instructions to complete lock assembly.

**Tools Needed:** Drill and a 1/2" Diameter Hole Saw

**Fig. 30**

# Supplemental Instructions

## 2nd Section Lift Handle Installation

Center the lift handle vertically on the 2nd section center stile (wood panel doors) or in between the hinge holes (wood flush doors Doors), directly above the lift handle on the bottom section. Using the lift handle holes as a guide, mark and drill two ¼" holes through the door. Position the lift handles on either side of the section and fasten with two ¼" carriage bolts and flanged nuts.

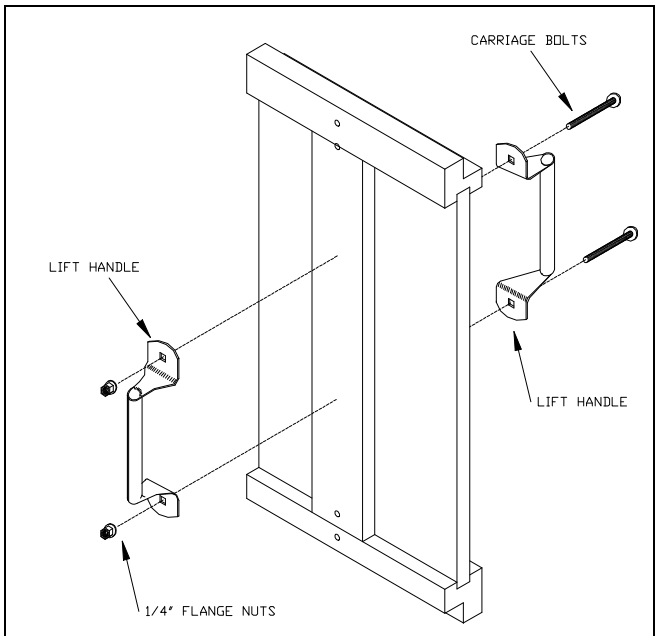


**Figure 1 – Wood Panel Doors**

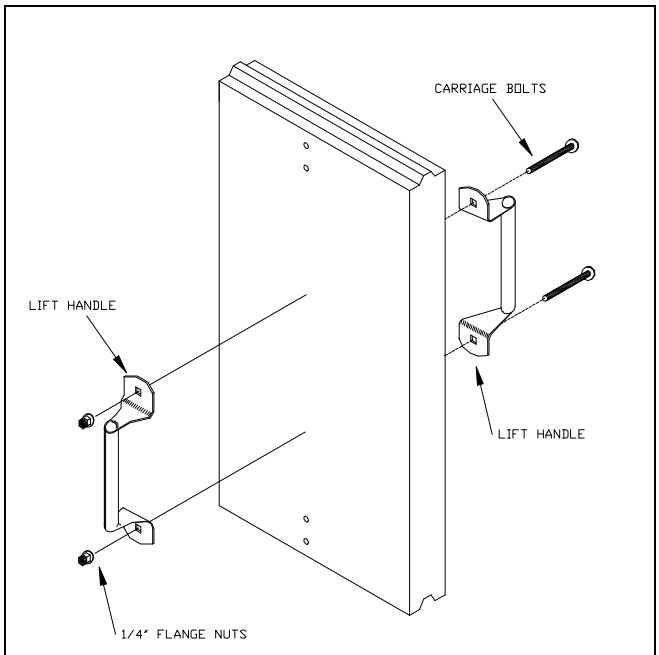


**Figure 2 – Wood Flush Doors**

# Lock Installation
# Slip sheet

Vertical tracks may appear to have no lock holes. On these tracks examine the track for this note. STRIKE SLUG FROM OTHER SIDE. Follow instructions below.

**#1 Snap Latch**
If installing the #1 snap latch lock discard these instructions.

**#2 Slide Bolt**
Install door per installation manual supplied. Determine position of slide bolt on #2 section. Remove the slug by striking with a hammer from the outside of the track. This may be accomplished after the balancing system is installed and the door is raised to the open position.

**#3Lock**
Install door per installation manual supplied. After the lock bars have been installed, mark the closest slug on each side of the vertical track. These will be the appropriate slugs to remove. Remove the slugs by striking with a hammer from the outside of the track. This may be accomplished after the balancing system is installed and the door is raised to the open position.

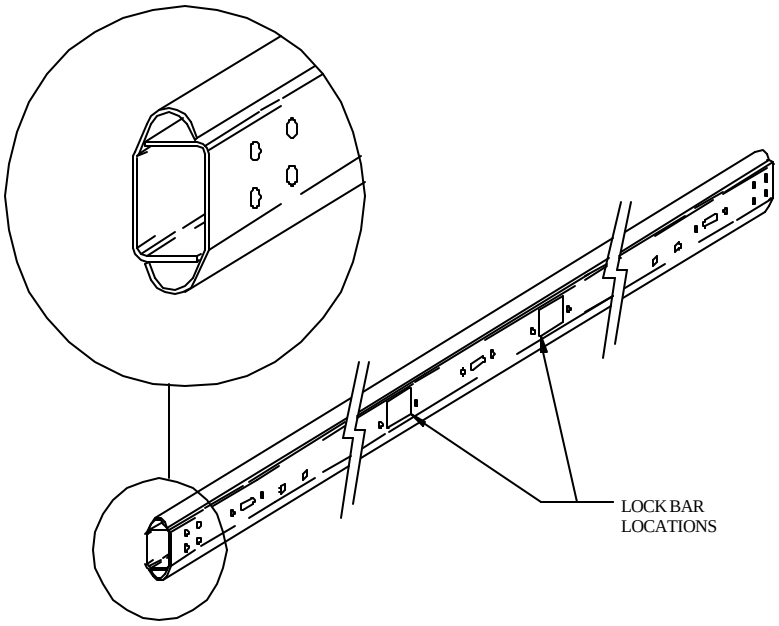

# INSTALLATION INSTRUCTIONS

## Semi-Custom Wood Door Supplemental Instructions

## (For use with Wood Residential Garage Door Instruction Manual)

This is a supplement to the **Wood Residential Garage Door Instructions** (Referred to as MANUAL). It covers important information unique to Semi-Custom Wood Doors. For all other information and safety warnings concerning your Semi-Custom Wood garage door, see the MANUAL. Read all of the information in both manuals before beginning installation.

These instructions will cover the following areas, where Semi-Custom door installation differs from standard wood door installation:

1. Section heights.
2. Springing.
3. Track Radius / Headroom.
4. Bottom Bracket Attachment.
5. Lift Handle Hardware and Attachment.
6. Strutting.
7. Opener recommendation and reinforcement.
8. Painting and Staining Instructions.

### Section heights

Semi-Custom Wood doors are manufactured in different section heights than standard wood doors. A 6'6" or 7'0" high Semi-Custom Wood Door consists of (3) sections, while a7'6" or 8'0" high door consists of (4) sections. See FIG. 3 on next page for proper section and hardware placement.

### Springing

Semi-Custom Wood Doors are available with Standard Torsion or EZ-Set Torsion™ Springing only (see page 6 of the MANUAL for an illustration). **Use of any springing system other than Standard Torsion or EZ-Set TorsionÔ to counterbalance the door will void the warranty on the door.**

### Track Radius / Headroom

Because the section heights on Semi-Custom Wood doors are greater than on standard wood doors, 15" track is required for the door to operate properly. Measure the track radius of your door according to the instructions on page 12 of the MANUAL. **Note: Semi-Custom Wood Doors will not operate properly with 12" radius track**. 14" of headroom is required for Semi-Custom Wood Doors without an automatic opener; 16-1/2" of headroom is required if an automatic opener will be installed.

**Note: Because the larger sections on Semi-Custom Wood Doors do not distribute weight evenly as the door is being opened or closed, The manufacturer strongly recommends that all Semi-Custom Wood Doors be installed with an automatic opener with a minimum ½ horsepower rating.**

Semi-Custom Wood doors are available with double track low headroom hardware (front mount or rear mount torsion). 9-1/2" of headroom is required for front mount double track low headroom; 4-1/2" of headroom is required for rear mount. An additional 2-1/2" is required for installing an automatic opener.

### Bottom Bracket Attachment

Install bottom bracket with (3) ¼" x 1" red lag screws and (1) ¼" x 2-1/8" carriage bolt and red ¼" flange nut as shown below. Pilot drill 1/8" x ¾" deep holes for lag screws, and through drill ¼" for carriage bolt. (FIG. 1)

**WARNING**

**Springs and bottom brackets are under EXTREME spring tension and could cause SEVERE INJURY OR DEATH if mishandled. DO NOT ATTEMPT TO REPAIR OR ADJUST the springs, red fasteners, hardware, or structure to which they are attached.**

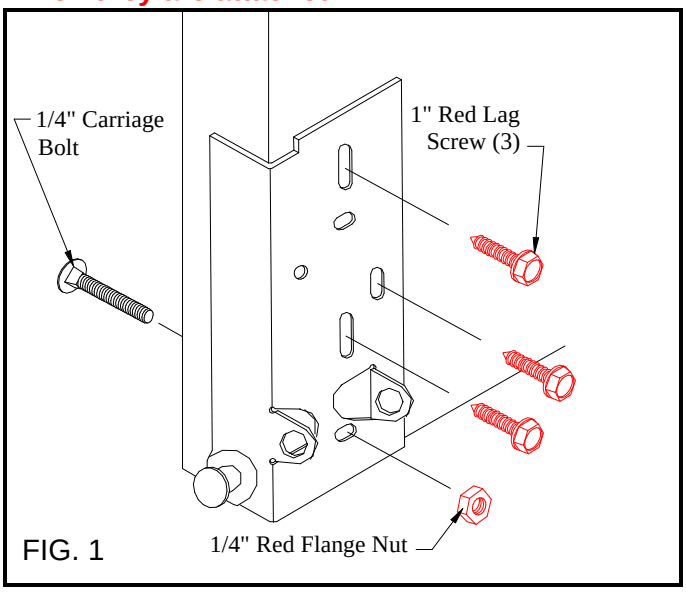


FIG. 1

## Lift Handle Hardware and Attachment

Install (2) handles using black carriage bolts on the bottom section as detailed in the MANUAL, with the exception that the outside bottom handle should be the decorative handle supplied with your semi-custom door (reference FIG. 3).

Place 2nd section lift handles at the locations shown in FIG. 2 and mark holes. Taking care not to go through the section, drill 3/16" pilot holes in the marked locations. Install handles using ¼" x 1" lag screws (outside handles use black lag screws). Handle must be installed 20" – 30" directly above bottom section handle.

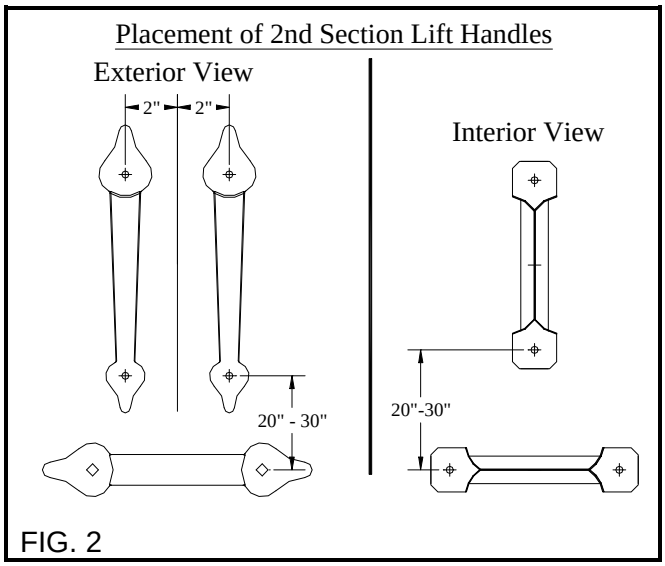

FIG. 2

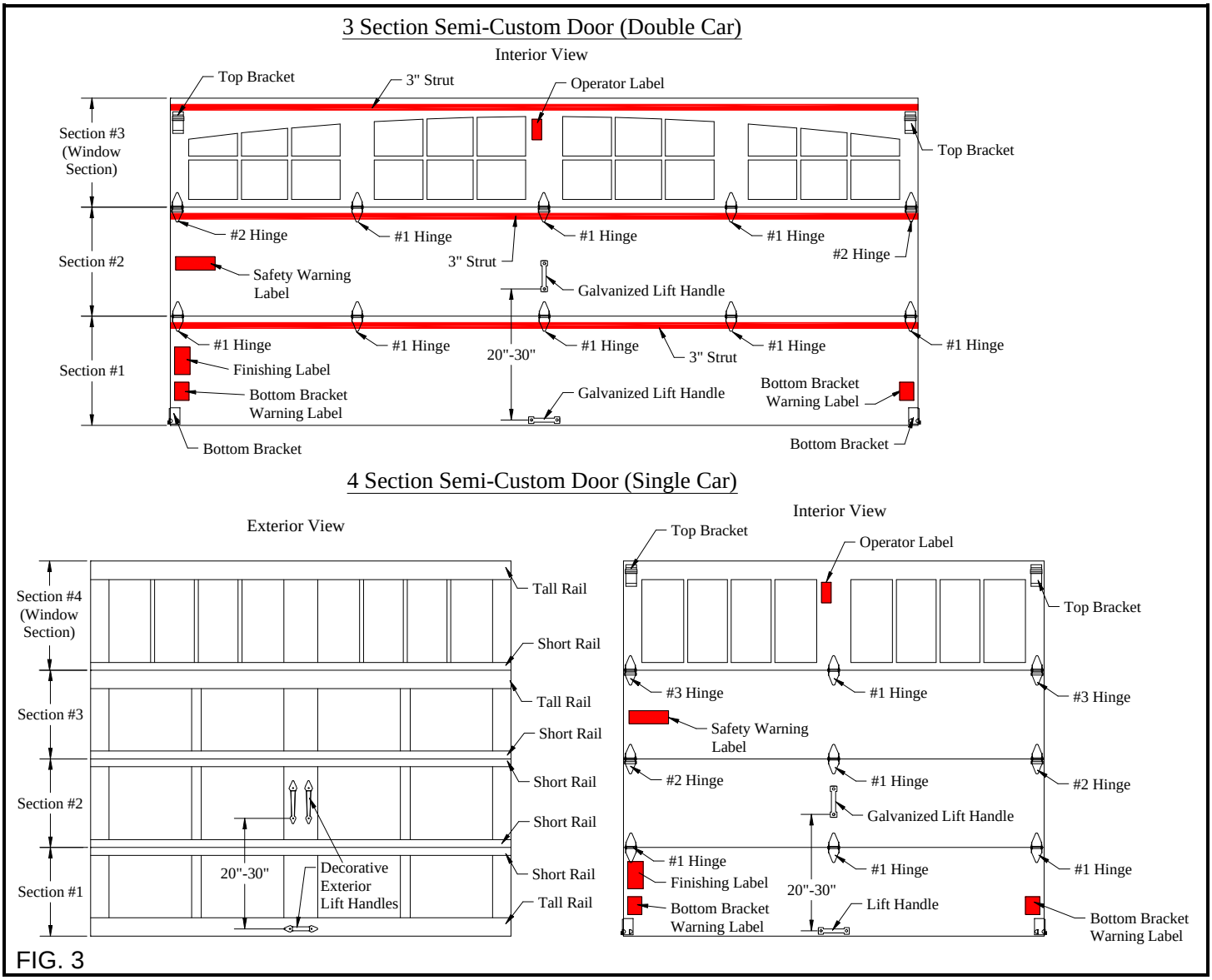

FIG. 3

## Strutting

Semi-Custom Wood Doors up to 10' 0" wide do not require any struts. Semi-Custom Wood Doors over 10'0" wide require (1) 3" high strut per section, mounted at the top of each section with strut clips on the bottom hinge leaf (see the MANUAL for specific attachment information). The top strut is attached with 1" lag screws at each hinged stile location.

## Opener recommendation & reinforcement

**Note: Because the larger sections on Semi-Custom Wood Doors do not distribute weight evenly as the door is being opened or closed, The manufacturer strongly recommends that all Semi-Custom Wood Doors be installed with an automatic opener with a minimum ½ horse-power rating.**

Reinforce the door for an automatic opener according to the instructions in the MANUAL, with the exception that the **vertical piece of punched angle iron must be 26" long instead of 21" long.**

## Finishing (Painting or Staining) Instructions:

### Preparation Work

**Important information:** Wood products can absorb moisture during shipping and storage. Do not leave or store unfinished doors outside. It is important that all sections be free of moisture prior to finishing the sections. Wood doors should not be finished under very humid conditions (storing the door in such an environment will void the warranty on the door). In order to ensure that all door surfaces are properly finished, it is **required** that the door sections be finished **prior to installation. Failure to properly and completely finish all door section surfaces, including the sides, back, bottom, face, and joints, will void the warranty on the door.** *Differences in grain and color variations are indicative of natural wood. These are not considered product defects. Some variations in stain penetration may occur between materials from which the door is constructed (i.e. plywood panel vs. wood frame).*

### Painting Your Door

**Step 1:** Fill any gaps or voids between wood surfaces with a caulking compound that can be painted.

**Step 2:** Clean all door surfaces with a stiff bristle brush to remove surface dirt, dust, and loose fibers.

**Step 3:** Before finish painting, the door section should be primed on all sides. Wood doors can be ordered either primed or unprimed (primed doors can be identified by the gray-white finish). If your door is pre-primed, proceed to step 4 below. Prime all section surfaces using a quality oil or latex based exterior primer, taking care to observe the primer manufacturer's application instructions, including recommendations on temperature and drying time. If you are painting a redwood or cedar door, the primer should contain a tannen blocker. **Using a primer on redwood and cedar doors that does not contain a tannen blocker could result in discoloration of the door after painting.**

**Step 4:** Finish paint all door section surfaces using a quality oil or latex based exterior paint. **The finish coat base should be the same as the primer coat base** (i.e. a latex based finish paint is recommended for use with a latex based primer, and an oil based finish paint is recommended for use with an oil based primer). **If your door is factory primed, a latex based finish paint should be used.** Carefully follow all manufacturer's application instructions, including recommendations on temperature and drying time. A second top coat is recommended for optimum protection.

### Staining Your Door

*Note: The following door models cannot be stained: 10, 19 (Hardboard Panels), RH1G, RH2G, RH3G, RH4G, RH5G, RH6G (Grooved Plywood Panels). If your door is one of these models, refer to the painting instructions above.*

**Step 1:** Select a quality exterior penetrating stain (transparent, semi-transparent, or solid) that is mildew resistant, UV resistant, and water repellant. Selection of a stain or finish that does not have these properties will void the warranty on the door. Avoid film-forming finishes, such as varnishes and urethanes, which do not penetrate the wood.

**Step 2:** Fill any gaps or voids between wood surfaces with a caulking compound that can be stained.

**Step 3:** Clean all door surfaces with a stiff bristle brush to remove surface dirt, dust, and loose fibers.

**Step 4:** Apply stain to all door section surfaces per stain manufacturer's instructions, including recommendations on temperature and drying time.

## Maintaining Your Painted or Stained Door

The two major contributing factors to the breakdown of the door's finish (ultimately resulting in rotting and warpage) are sun and moisture. Annually examine your door for any signs of paint finish cracking or peeling or for any cracks in the wood door section. If the door is painted, The manufacturer recommends that it be repainted every 1-2 years to protect or seal the door against the elements. Failure to do so will result in voiding of the warranty. If the door is stained, reapply stain as needed per the stain manufacturer's recommendations. In general, the clearer the stain, the more it will need to be reapplied.

Remember, the quality, properties, and composition of exterior paints and stains vary greatly among manufacturers and among different products. Fill in the form below and keep this manual to ensure compliance with the door manufacturer's recommendations and for future maintenance of your door finish.

Minor cracks in the wood should be repaired by filling in the area with an exterior grade caulk compound and then refinished following the previous instructions. Failure to repair cracks could potentially lead to more extensive section damage in the future. Gouges in the wood surface can be repaired with a wood filler. If extensive damage occurs to the door, the door manufacturer recommends that the door section be replaced. Failure to do so could result in damage or injury to property or individuals in the garage.

| PAINTED | STAINED |
|---|---|
| **Primer**<br>Factory Primed? ☐<br>Consumer Primed? ☐<br>Primer Brand:_____<br>Product Name:_____<br><br>**Finish Paint**<br>Paint Brand:_____<br>Product Name:_____<br>Color:_____ | **Stain**<br>Brand:_____<br>Product Name:_____<br>Color:_____<br>Penetrating? ☐<br>UV Resistant? ☐<br>Mildew Resistant? ☐<br>Water Repellant? ☐<br>Reapply every _____ years. |

## MAINTENANCE HISTORY

Purchase Date_____ Install / Finish Date_____

| Date | Repair, Maintenance, or Refinish |
|---|---|
| | |

# INSTALLATION INSTRUCTIONS

## Single Car Clopay WindCode® Instructions

(For use with Insulated and Uninsulated Steel Residential Garage Door Instruction Manual)

## Things to Know Before You Begin

This is a supplement to the Clopay **Steel Residential Garage Door Instructions (Steel)** and **Insulated Steel Garage Door Instructions (Insulated)** (Referred to as MANUAL). It covers important information unique to Clopay WindCode® Doors. For all other information and safety warnings concerning your Clopay WindCode® garage door, see the MANUAL. Read all of the information below before beginning installation.

WindCode® doors require additional struts and hinge attachments beyond what is required on standard doors. The installation and attachment of these struts and hinges are outlined in this manual. Specifically, these instructions cover the following hardware attachment:

1) Attachment of Hinges
2) Top Bracket Installation
3) Addition and Attachment of Struts
4) Jamb / Track Configuration
5) Track Bracket Placement

Each Clopay WindCode® door is included in one of nine categories: W1 - W9. Each category covers a different range of windload and subsequently, a specific strut configuration. (Tables 1 & 2)

**Table 1**

| Windload Category | Test Windload (P.S.F.) | Approximate Test MPH Gust Speed |
|---|---|---|
| W1 | 16 to 23 | 90 |
| W2 | 24 to 28 | 100 |
| W3 | 29 to 33 | 110 |
| W4 | 34 to 42 | 120 |
| W5 | 43 to 54 | 140 |
| W6 | 55 to 60 | 150 |
| W7 | 60 to 68 | 155 |
| W8 | 69 to 81 | 170 |
| W9 | 81 + | 180 |

**Clopay®**

**Consumer Hotline**
**1-800-225-6729**

**NOTE:** It is the buyer's responsibility to purchase the garage door required to meet local building codes.

Clopay WindCode® garage doors not installed with the proper reinforcement (struts, hinges, jamb brackets, track, fasteners) will not perform as designed to meet the building code requirements.

Windload reinforcement on single car doors (9'0" wide and under) is configured differently than strutting on double car doors (9'2" wide and over).

An electric impact gun is strongly recommended for installation of WindCode® doors.

To determine what door you have, locate the identification sticker found on the end of the door package. This sticker will identify the door size, door model, and windload category. (FIG. 1)

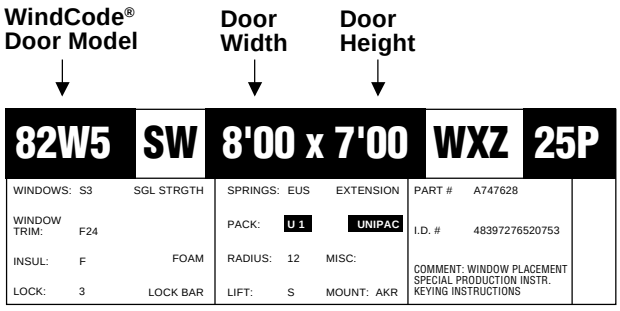


**IDENTIFICATION STICKER (Located On Package)**
**(Example: Model 82 Windload Category W5)**

**Fig. 1**

# Strut Attachment

Struts are placed lengthwise across the door to add strength. Strut configurations vary depending on WindCode® category and door size. Table 2 shows six of the most common WindCode® doors and refers to a specific drawing in this manual. These drawings (Figures 11 to 16 in the back of this supplement) include specific strut configuration and detailed technical information for each door. After reviewing the strut configuration, turn to page 3 to begin the actual installation. For specifications and drawings for other door models please call the Clopay Consumer Hotline at 1-800-225-6729.

**Table 2**

| Model Number | Windload Category | Door Width | Strutting* Configuration | Corresponding Figure / Drawing | Pushnuts Required |
|---|---|---|---|---|---|
| 73/75/80/82/ 84A/90/94 | W4 | Up to 9'0" (Single Car) | 1 per section | Figure 11 / 300159 | No |
| 2400/2401/4400/ 4401/4300/4301/ 4310/ HDG/HDGL | W4 | Up to 9'0" (Single Car) | 1-1-0-1** | Figure 12 / 100773 | No |
| 1000/183/ 187/1001 | W5 | Up to 9'0" (Single Car) | 1 per section | Figure 13 / 101242 | No |
| 2400/2401/4400/ 4401/4300/4301/ 4310/HDG/HDGL | W6 | Up to 9'0" (Single Car) | 2 on first section, 1 on all other sections | Figure 14 / 101526 | No |
| 84A/94 | W7 | Up to 9'0" (Single Car) | 2 per section (only 1 on 3rd section) | Figure 15 / 101702-24 | Yes, Fig. 8 |
| 2400/2401/4400/ 4401/4300/4301/ 4310/HDG | W8 | Up to 9'0" (Single Car) | 2 per section | Figure 16 / 101703 | No |

** The bottom section is considered the first section, the second section from the bottom is considered the second section, etc.*
***Strut pattern is found only on doors that are four sections high (6'6" to 7'0"). A strut pattern of 1-1-0-1-0 for doors that are five sections high (7'6" to 8'0")*

# Bottom Section Strut Installation

## Strut Attachment on Bottom of Bottom Section

Depending on the strutting configuration of the WindCode® Door, there are two possible positions that a strut can be installed. For the correct placement, see Table 2 and the corresponding Figures 11 to 16. Position bottom bracket as shown in MANUAL. Position the strut according to the correct figure for the corresponding door model. Drill one 5/32" hole at the top and one 5/32" hole at the bottom of the strut at all hinge locations. If an electric impact gun is used, no holes need to be drilled beforehand. Attach strut to door section with 1/4" x 3/4" self-tapping screws at each drilled hole. (FIG. 2A & 2B)

**NOTE:** For some models, pushnuts are required with the roller installation. Refer to Table 2 to determine which models use pushnuts. (FIG. 8)

# End Hinge Installation

## End Hinges

14 Gauge hinges are used at all end stile locations (for more detail see MANUAL). Insert the (4) sheet metal screws as indicated in the MANUAL. Insert the (4) 1/4" x 3/4" self-tapping screws per hinge as shown. (You may have to pilot drill 5/32" holes before installing self-tapping screws.) (FIG. 3)

**NOTE:** For some models, pushnuts are required with the roller installation. Refer to Table 2 to determine which models use pushnuts. (FIG. 8)

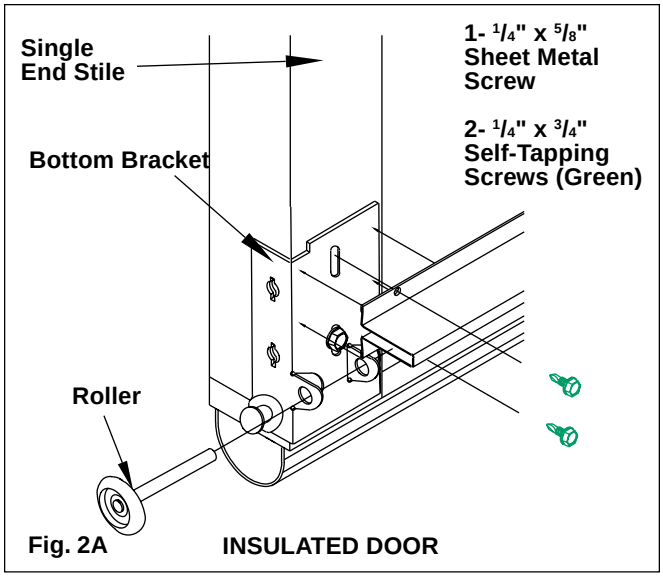

Fig. 2A INSULATED DOOR

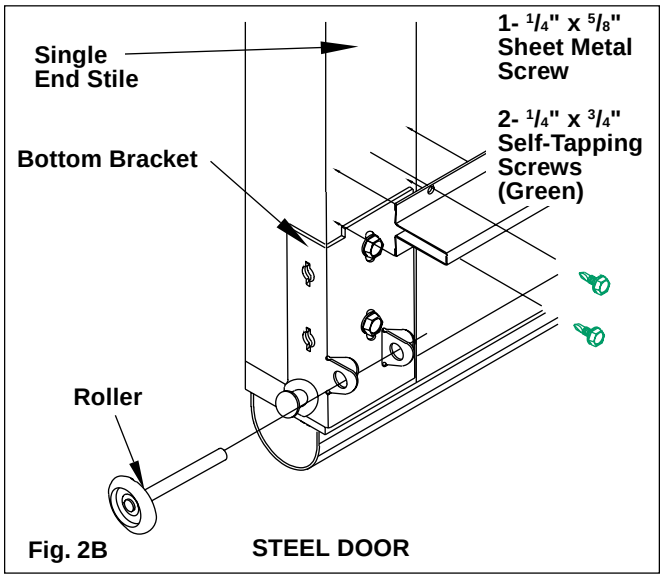

Fig. 2B STEEL DOOR

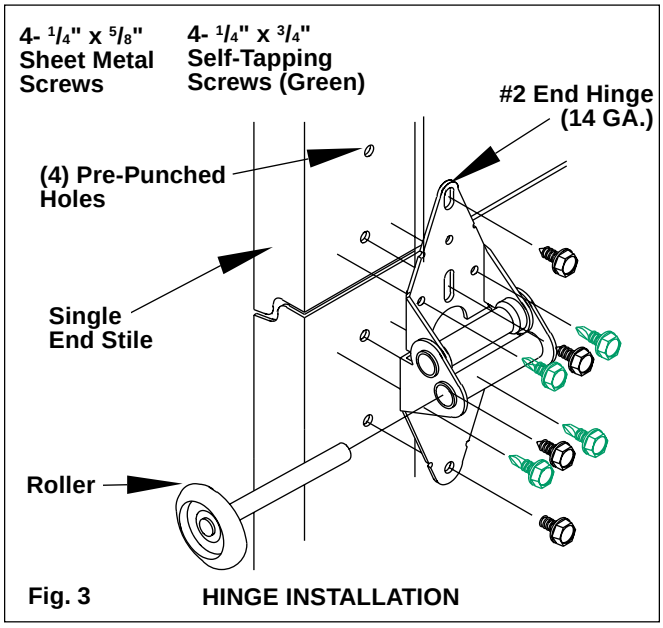

Fig. 3 HINGE INSTALLATION

# Intermediate Section Strut Installation

**The strut installation for the intermediate section is different for steel and insulated doors. Refer to the appropriate section below.**

## Single Hinge Strut Attachment (Steel)

Depending on the strutting configuration of the WindCode® Steel Door, there are two possible positions that a strut can be installed. For the correct placement, see Table 2 and the corresponding Figures 11 to 16. To attach strut, position the strut on the door. Drill one 5/32" hole at the top and one 5/32" hole at the bottom of the strut at all hinge locations. If an electric impact gun is being used, no holes need to be drilled beforehand. Attach strut to door section with 1/4" x 3/4" self-tapping screws at each drilled hole. (FIG. 4)

Note that the strut on the top of the section overlaps the bottom leaf of the hinge. If required, a strut mounted at the bottom of the section can be mounted above the hinge leaf. (FIG. 4A)

**NOTE:** For some models, pushnuts are required with the roller installation. Refer to Table 2 to determine which models use pushnuts. (FIG. 8)

## Single Hinge Strut Attachment (Insulated)

Depending on the strutting configuration of the WindCode® insulated door, there are two possible positions that a strut can be installed. For the correct placement, see Table 2 and the corresponding Figures 11 to 16. For insulated doors the struts must overlap the hinge leafs on both the top and bottom. To attach strut, position the strut on the door. Drill one 5/32" hole at the top and one 5/32" hole at the bottom of the strut at all hinge locations. If an electric impact gun is used, no holes need to be drilled beforehand. Attach strut to door section with 1/4" x 3/4" self-tapping screws at each drilled hole. (FIG. 5 & 5A)

**NOTE:** For some models, pushnuts are required with the roller installation. Refer to Table 2 to determine which models use pushnuts. (FIG. 8)

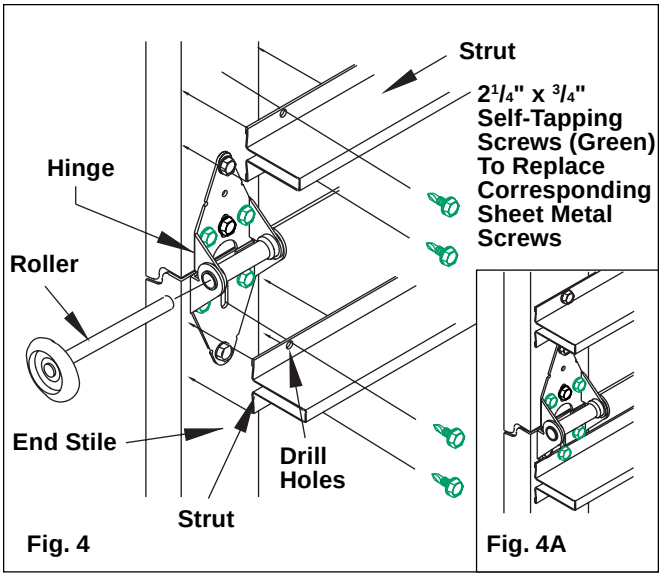

Fig. 4 Fig. 4A

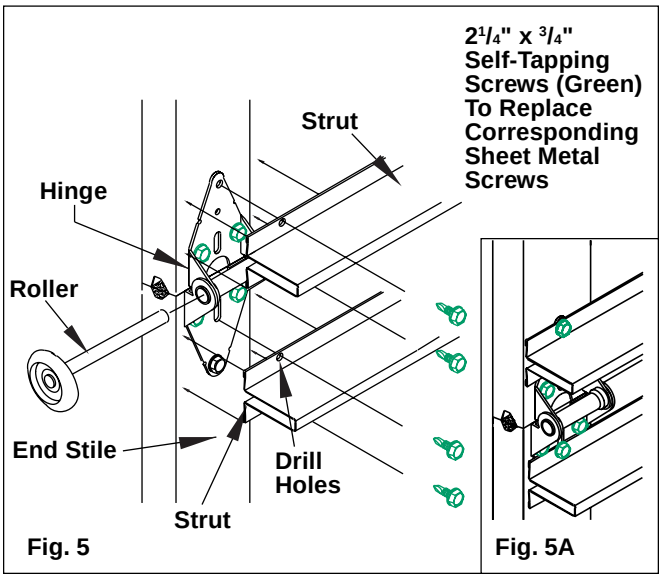

Fig. 5 Fig. 5A

# Top Bracket Installation

## Top Bracket

In most instances, WindCode® doors use a heavier gauge top bracket. Due to this, the holes in the bracket will not line up with the holes in the stiles. Install the top of the top brackets approximately 3" to 3$^1/_2$" below the top of the section with (4) $^1/_4$" x $^3/_4$" self-tapping screws. Once installed, the slide adjustments must be aligned so that the roller lines up with the track so the door will close flush to the door jamb. (FIG. 6)

**NOTE:** For some models, pushnuts are required with the roller installation. Refer to Table 2 to determine which models use pushnuts. (FIG. 8)

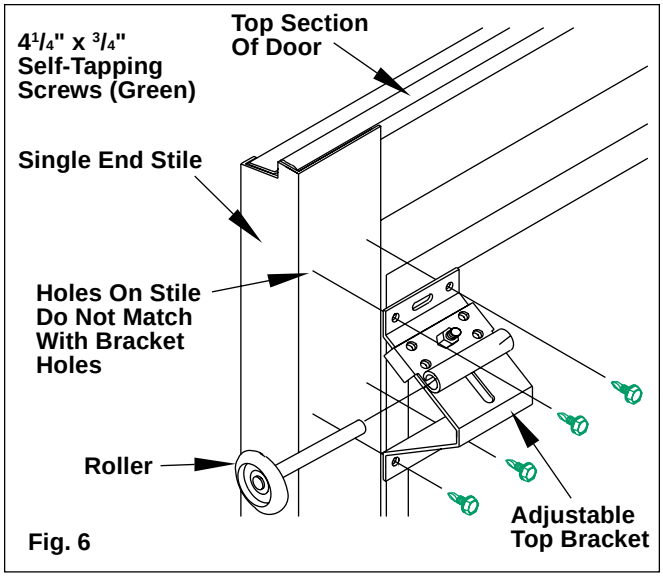

Fig. 6

# Top Section Strut Attachment

Depending on the strutting configuration of the WindCode® door, a strut may be required on the top section (See Table 2 and corresponding drawing). To attach a strut at the top of the top section it must be placed above the top roller bracket. Drill one $^5/_{32}$" hole at the top and one $^5/_{32}$" hole at the bottom of the strut at all hinge (or back-up plate (insulated) locations.) If an electric impact gun is used, no holes need to be drilled beforehand. Attach strut to door section with $^1/_4$" x $^3/_4$" self-tapping screws at each drilled hole. (FIG. 7)

**NOTE:** For some models, pushnuts are required with the roller installation. Refer to Table 2 to determine which models use pushnuts. (FIG. 8)

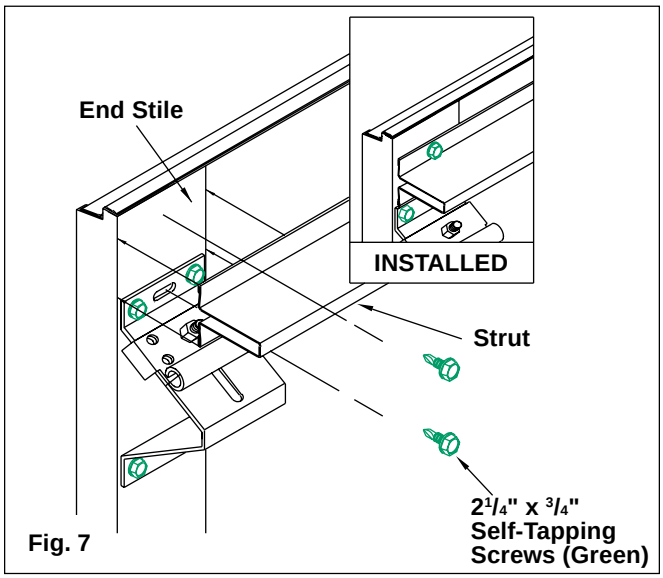

Fig. 7

# Roller and Pushnut

To install the pushnut roller, slide the roller into the hinge then slide the pushnut onto the shaft of the roller until it is within an $^1/_8$" to $^1/_4$" from the hinge. (FIG. 8)

**NOTE:** Do NOT install pushnut before installing roller into hinge. Use $^1/_2$" Deep Draw socket and hammer to tap on pushnuts.

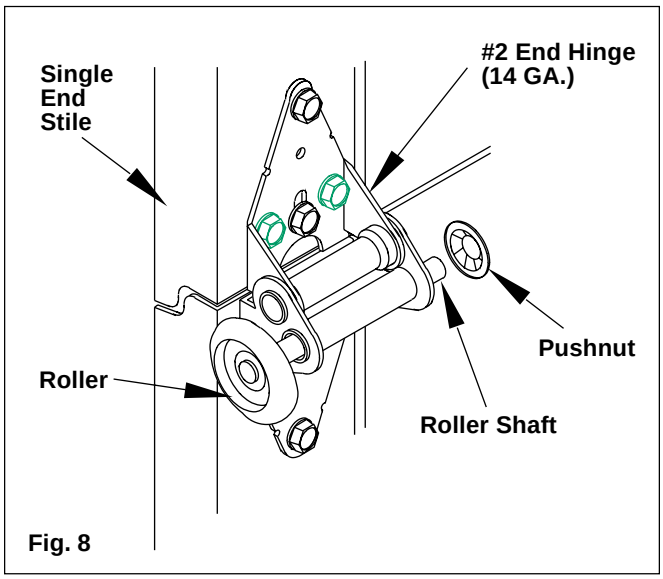

Fig. 8

## Jamb Configuration

**IMPORTANT**

**The design of the supporting structural elements (i.e. door jamb) shall be the responsibility of the professional of record for the building or structure and in accordance with current building codes for the loads listed on the technical drawing (attached) for the specific model.**

**It is also important that the vertical 2 x 6 wood jambs are attached to the supporting structure in a method that is sufficient to transfer the loads exerted by the wind pressures. Some suggested vertical jamb attachment methods are included in the drawings. (FIG. 11 to 16)**

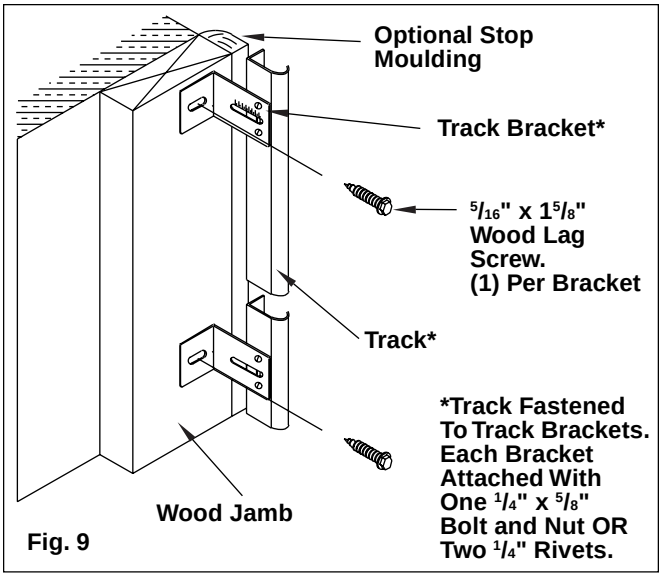

Fig. 9

## Track Bracket Placement

Track bracket placement are configured differently according to height. Typically, WindCode® doors require more track brackets than non-WindCode® doors. However, each track bracket is attached to the track and jamb using the same fasteners and method of attachment as shown in the MANUAL. (FIG. 9 & 10)

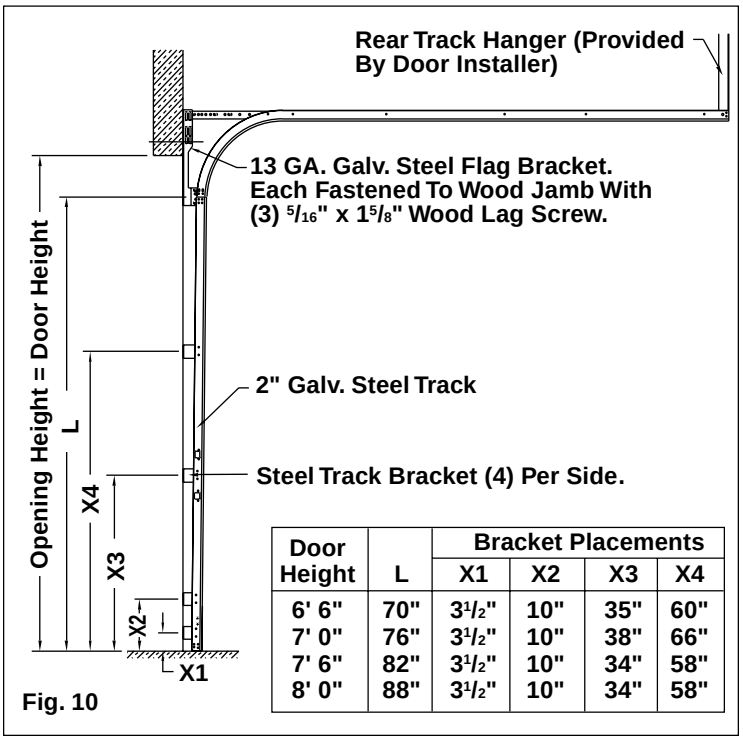

Fig. 10

| Door Height | L | Bracket Placements | | | |
|---|---|---|---|---|---|
| | | X1 | X2 | X3 | X4 |
| 6' 6" | 70" | 3 1/2" | 10" | 35" | 60" |
| 7' 0" | 76" | 3 1/2" | 10" | 38" | 66" |
| 7' 6" | 82" | 3 1/2" | 10" | 34" | 58" |
| 8' 0" | 88" | 3 1/2" | 10" | 34" | 58" |

# Opener Reinforcement Installation

## Attachment of Opener Reinforcement

Refer to the MANUAL for installation instructions. If the Clopay WindCode® door requires a strut across the top of the top section, this takes the place of any horizontal angle iron required by the MANUAL. The vertical angle as shown in the MANUAL is still required on WindCode® Doors.

# INSTALLATION INSTRUCTIONS

## Double Car Clopay WindCode® Instructions

(For use with Insulated and Uninsulated Steel Residential Garage Door Instruction Manual)

## Things to Know Before You Begin

This is a supplement to the Clopay **Steel Residential Garage Door Instructions (Steel)** and **Insulated Steel Garage Door Instructions (Insulated)** (Referred to as MANUAL). It covers important information unique to Clopay WindCode® Doors. For all other information and safety warnings concerning your Clopay WindCode® garage door, see the MANUAL. Read all of the information below before beginning installation.

WindCode® doors require additional struts and hinge attachments beyond what is required on standard doors. The installation and attachment of these struts and hinges are outlined in this manual. Specifically, these instructions cover the following hardware attachment:

1) Strut Installation
2) End Hinge Installation
3) Top Bracket Installation
4) Roller and Pushnut Installation
5) Jamb Configuration
6) Opener Reinforcement Installation

Each Clopay WindCode® door is included in one of nine categories: W1 - W9. Each category covers a different range of windload and subsequently, a specific strut configuration. (Tables 1 & 2)

**Table 1**

| Windload Category | Test Windload (P.S.F.) | Approximate Test MPH Gust Speed |
|---|---|---|
| W1 | 16 to 23 | 90 |
| W2 | 24 to 28 | 100 |
| W3 | 29 to 33 | 110 |
| W4 | 34 to 42 | 120 |
| W5 | 43 to 54 | 140 |
| W6 | 55 to 60 | 150 |
| W7 | 60 to 68 | 155 |
| W8 | 69 to 81 | 170 |
| W9 | 81 + | 180 |

Clopay® BUILDING PRODUCTS A Griffon Company

**Consumer Hotline**
**1-800-225-6729**

**Note:** It is the buyer's responsibility to purchase the garage door required to meet local building codes.

Clopay WindCode® garage doors not installed with the proper reinforcement (struts, hinges, jamb brackets, track, fasteners) will not perform as designed to meet the building code requirements.

Windload reinforcement on single car doors (9'0" wide and under) is configured differently than strutting on double car doors (9'2" wide and over).

An electric impact gun is strongly recommended for installation of WindCode® doors.

To determine what door you have, locate the identification sticker found on the end of the door package. This sticker will identify the door size, door model, and windload category. (FIG. 1)

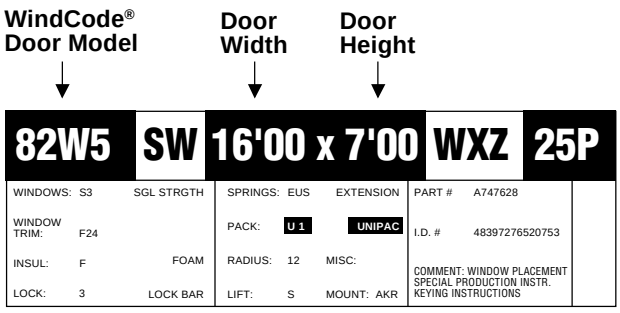


**IDENTIFICATION STICKER (Located On Package)**
**(Example: Model 82 Windload Category W5)**

**Fig. 1**

# Strut Attachment

Struts are placed lengthwise across the door to add strength. Strut configurations vary depending on WindCode® category and door size. Table 2 shows six of the most common WindCode® doors and refers to a specific drawing in this manual. These drawings (Figures 11 to 17 in the back of this supplement) include specific strut configuration and detailed technical information for each door. After reviewing the strut configuration, turn to page 3 to begin the actual installation. For specifications and drawings for other door models please call the Clopay Consumer Hotline at 1-800-225-6729.

**Table 2**

| Model Number | Windload Category | Door Width | Strutting* Configuration | Corresponding Figure / Drawing | Pushnuts Required |
|---|---|---|---|---|---|
| 73/75/82/ 84A/90/94 | W3 | 9'2"-16'0" (Double Car) | 2 on bottom, 1 on rest | Figure 11 / 101308 | Yes |
| 2050/2051/ 4050/4051 | W3 | 9'2"-16'0" (Double Car) | 2-1-2-1** | Figure 12 / 101820 | Yes |
| 73/75/82/ 84A/90/94 | W4 | 9'2"-16'0" (Double Car) | 2-1-2-1** | Figure 13 / 101711 | Yes |
| 2400/2401/4400/ 4401/4300/4301/ 4310/HDG/HDGL | W4 | 9'2"-16'0" (Double Car) | 2 on bottom, 1 on rest | Figure 14 / 101481 | No |
| 2400/2401/4400/ 4401/4300/4301/ 4310/HDG/HDGL | W4 | 16'2"-18'0" (Double Car) | 2 per section | Figure 15 / 101247 | No |
| 73/75/82/ 84A/90/94 | W5 | 9'2"-16'0" (Double Car) | 2 per section | Figure 16 / 101593 | Yes |
| 2050/2051/ 4050/4051 | W5 | 9'2"-16'0" (Double Car) | 2 per section | Figure 17 / 101595 | Yes |

** The bottom section is considered the first section, the second section from the bottom is considered the second section, etc.*
***Strut pattern is found only on doors that are four sections high (6'6" to 7'0"). A strut pattern of 2-1-2-1-2 for doors that are five sections high (7'6" to 8'0")*

# Bottom Section Strut Installation

## Strut Attachment on Bottom of Bottom Section

Depending on the strutting configuration of the WindCode® Door, there are two possible positions that a strut can be installed. For the correct placement, see Table 2 and the corresponding Figures 11 to 17. Position bottom bracket as shown in MANUAL. Position the strut according to the correct figure for the corresponding door model. Drill one 5/32" hole at the top and one 5/32" hole at the bottom of the strut at all hinge locations. If an electric impact gun is used, no holes need to be drilled beforehand. Attach strut to door section with 1/4" x 3/4" self-tapping screws at each drilled hole. (FIG. 2A & 2B)

**NOTE:** For some models, pushnuts are required with the roller installation. Refer to Table 2 to determine which models use pushnuts. (FIG. 8)

# End Hinge Installation

## End Hinges

14 Gauge hinges are used at all end stile locations (for more detail see MANUAL). Insert the (4) sheet metal screws as indicated in the MANUAL. Insert the (4) 1/4" x 3/4" self-tapping screws per hinge as shown. (You may have to pilot drill 5/32" holes before installing self-tapping screws.) (FIG. 3)

**NOTE:** For some models, pushnuts are required with the roller installation. Refer to Table 2 to determine which models use pushnuts. (FIG. 8)

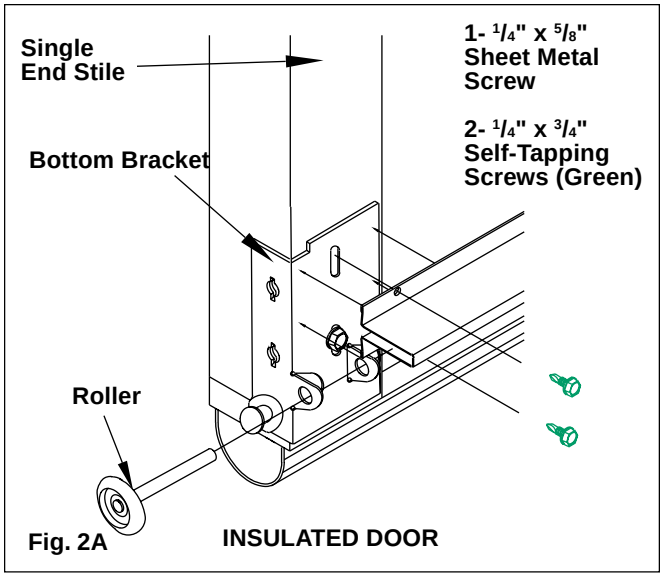

Fig. 2A INSULATED DOOR

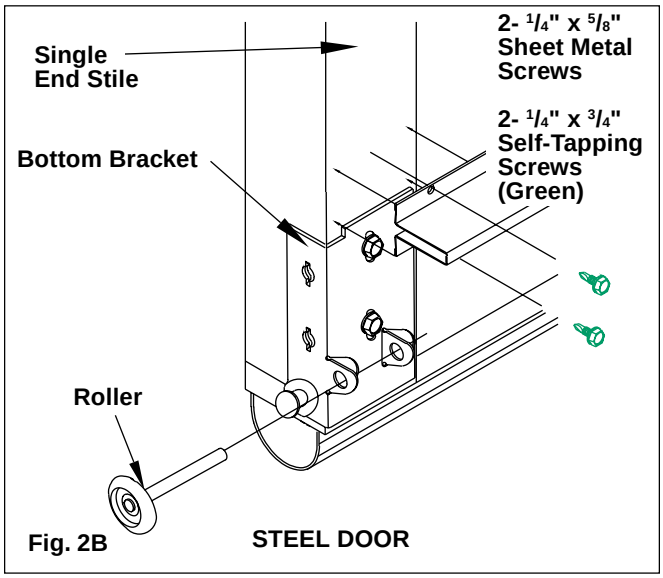

Fig. 2B STEEL DOOR

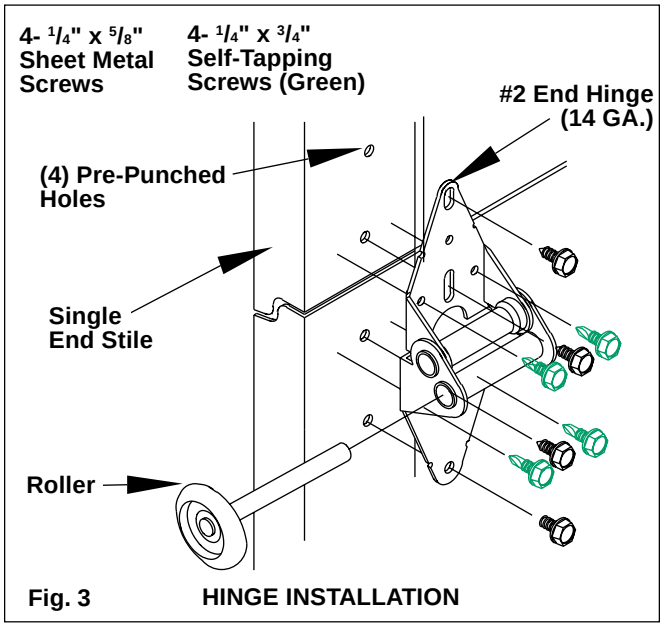

Fig. 3 HINGE INSTALLATION

# Intermediate Section Strut Installation

**The strut installation for the intermediate section is different for steel and insulated doors. Refer to the appropriate section below.**

## Single Hinge Strut Attachment (Steel)

Depending on the strutting configuration of the WindCode® Steel Door, there are two possible positions that a strut can be installed. For the correct placement, see Table 2 and the corresponding Figures 11 to 17. To attach strut, position the strut on the door. Drill one 5/32" hole at the top and one 5/32" hole at the bottom of the strut at all hinge locations. If an electric impact gun is being used, no holes need to be drilled beforehand. Attach strut to door section with 1/4" x 3/4" self-tapping screws at each drilled hole. (FIG. 4)

Note that the strut on the top of the section overlaps the bottom leaf of the hinge. If required, a strut mounted at the bottom of the section can be mounted above the hinge leaf. (FIG. 4A)

**NOTE:** For some models, pushnuts are required with the roller installation. Refer to Table 2 to determine which models use pushnuts. (FIG. 8)

## Single Hinge Strut Attachment (Insulated)

Depending on the strutting configuration of the WindCode® insulated door, there are two possible positions that a strut can be installed. For the correct placement, see Table 2 and the corresponding Figures 11 to 17. For insulated doors the struts must overlap the hinge leafs on both the top and bottom. To attach strut, position the strut on the door. Drill one 5/32" hole at the top and one 5/32" hole at the bottom of the strut at all hinge locations. If an electric impact gun is used, no holes need to be drilled beforehand. Attach strut to door section with 1/4" x 3/4" self-tapping screws at each drilled hole. (FIG. 5 & 5A)

**NOTE:** For some models, pushnuts are required with the roller installation. Refer to Table 2 to determine which models use pushnuts. (FIG. 8)

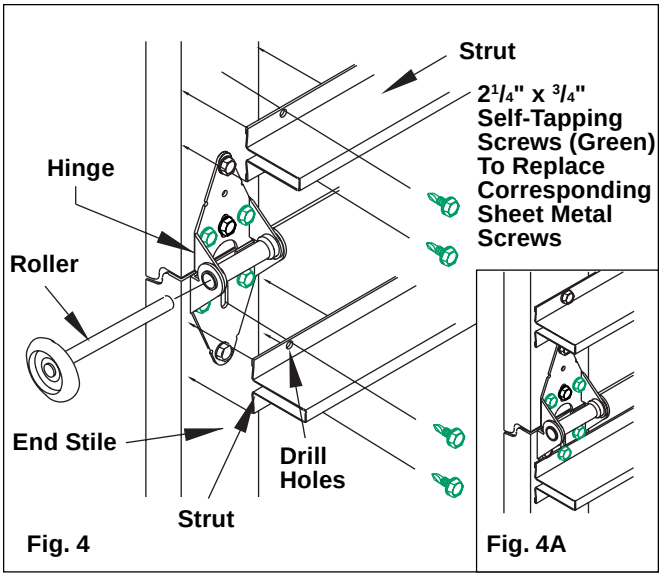

Fig. 4 Fig. 4A

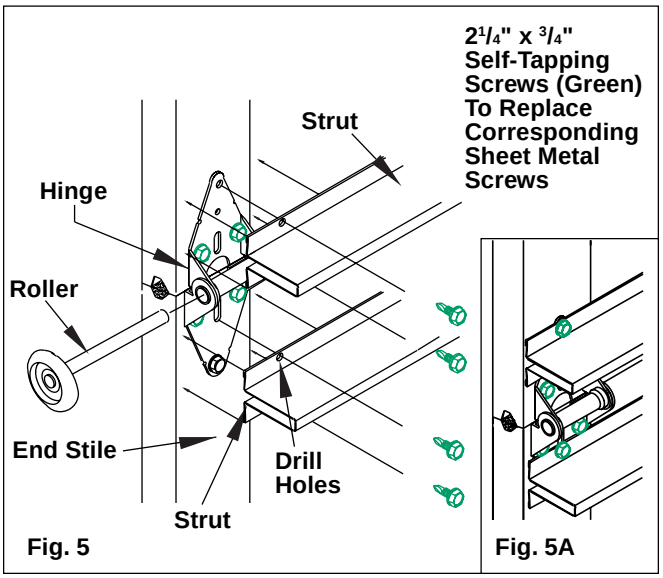

Fig. 5 Fig. 5A

# Top Bracket Installation

## Top Bracket

In most instances, WindCode® doors use a heavier gauge top bracket. Due to this, the holes in the bracket will not line up with the holes in the stiles. Install the top of the top brackets approximately 3" to 3$^1/_2$" below the top of the section with (4) $^1/_4$" x $^3/_4$" self-tapping screws. Once installed, the slide adjustments must be aligned so that the roller lines up with the track so the door will close flush to the door jamb. (FIG. 6)

**NOTE:** For some models, pushnuts are required with the roller installation. Refer to Table 2 to determine which models use pushnuts. (FIG. 8)

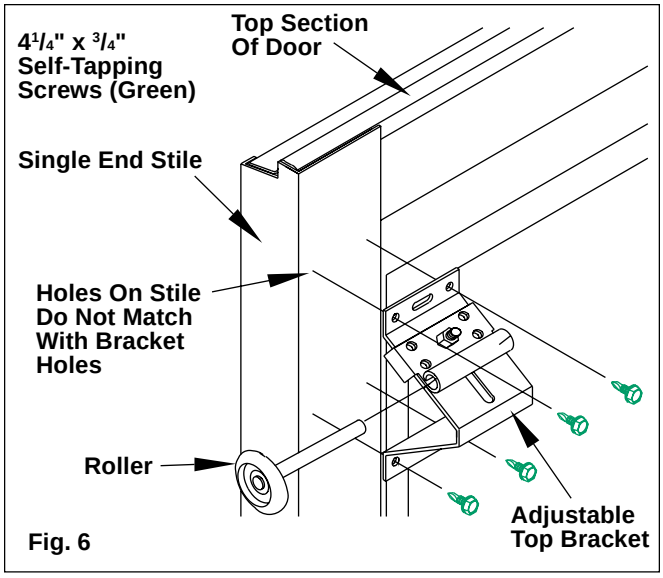

Fig. 6

# Top Section Strut Attachment

Depending on the strutting configuration of the WindCode® door, a strut may be required on the top section (See Table 2 and corresponding drawing). To attach a strut at the top of the top section it must be placed above the top roller bracket. Drill one $^5/_{32}$" hole at the top and one $^5/_{32}$" hole at the bottom of the strut at all hinge (or back-up plate (insulated) locations.) If an electric impact gun is used, no holes need to be drilled beforehand. Attach strut to door section with $^1/_4$" x $^3/_4$" self-tapping screws at each drilled hole. (FIG. 7)

**NOTE:** For some models, pushnuts are required with the roller installation. Refer to Table 2 to determine which models use pushnuts. (FIG. 8)

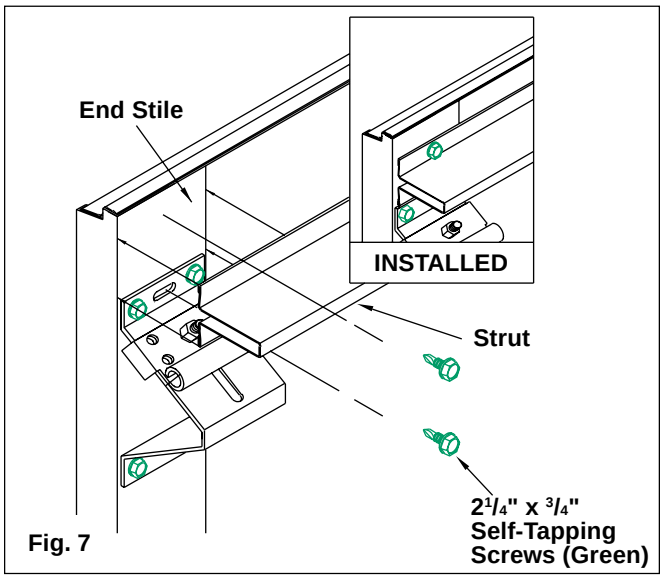

Fig. 7

# Roller and Pushnut

To install the pushnut roller, slide the roller into the hinge then slide the pushnut onto the shaft of the roller until it is within an $^1/_8$" to $^1/_4$" from the hinge. (FIG. 8)

**Note:** Do NOT install pushnut before installing roller into hinge. Use $^1/_2$" Deep Draw socket and hammer to tap on pushnuts.

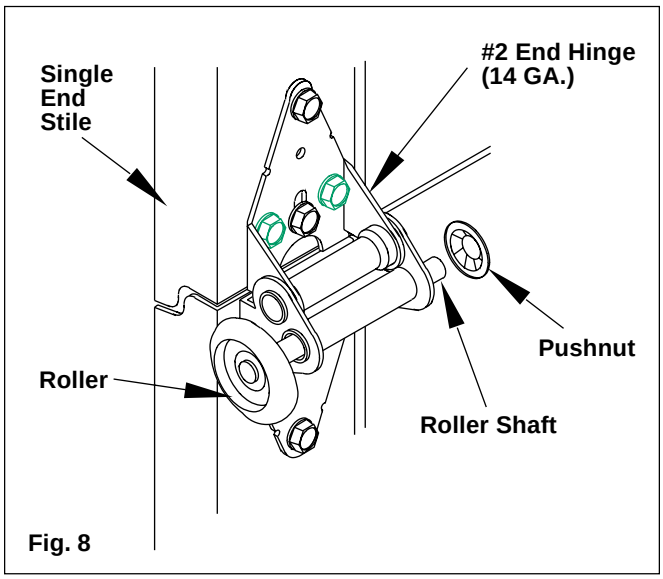

Fig. 8

# Jamb Configuration

**IMPORTANT**

**The design of the supporting structural elements (i.e. door jamb) shall be the responsibility of the professional of record for the building or structure and in accordance with current building codes for the loads listed on the technical drawing (attached) for the specific model.**

**It is also important that the vertical 2 x 6 wood jambs are attached to the supporting structure in a method that is sufficient to transfer the loads exerted by the wind pressures. Some suggested vertical jamb attachment methods are included in the drawings. (FIG. 11 to 17)**

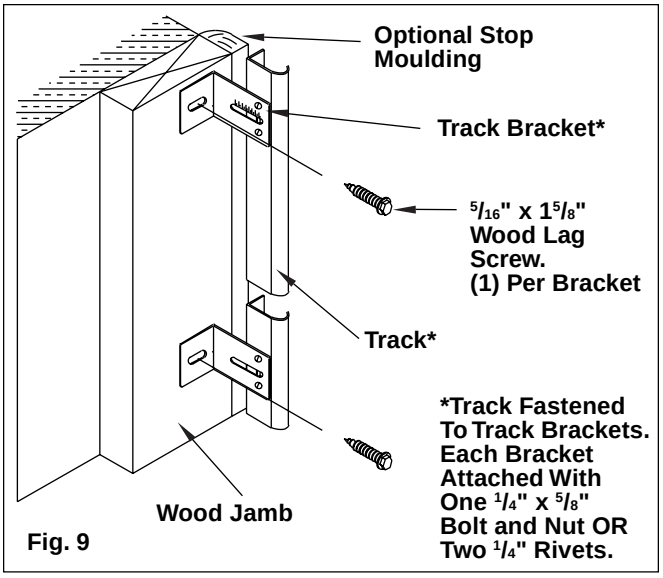

Fig. 9

## Track Bracket Placement

Track bracket placement are configured differently according to height. Typically, WindCode® doors require more track brackets than non-WindCode® doors. However, each track bracket is attached to the track and jamb using the same fasteners and method of attachment as shown in the MANUAL. (FIG. 9 & 10)

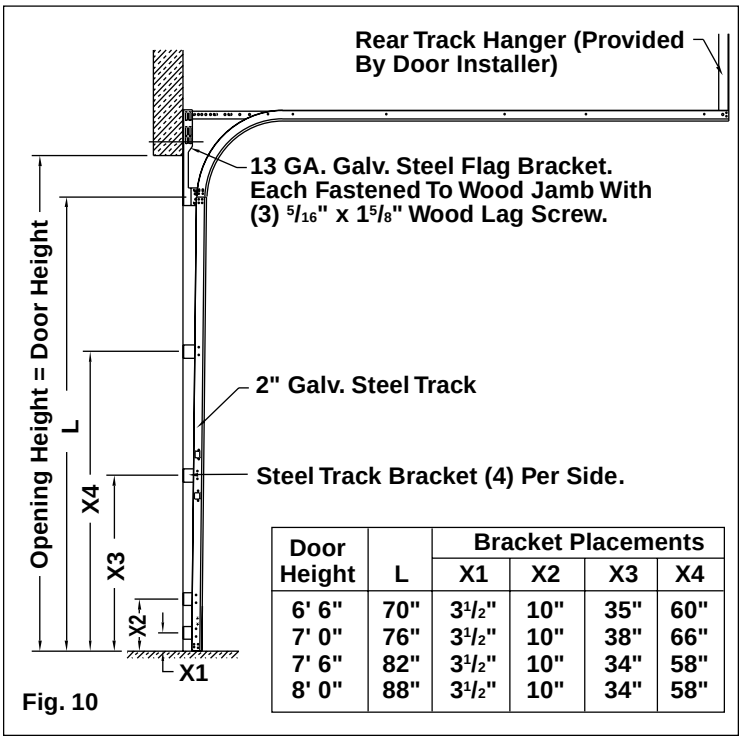

Fig. 10

| Door Height | L | Bracket Placements | | | |
|---|---|---|---|---|---|
| | | X1 | X2 | X3 | X4 |
| 6' 6" | 70" | 3 1/2" | 10" | 35" | 60" |
| 7' 0" | 76" | 3 1/2" | 10" | 38" | 66" |
| 7' 6" | 82" | 3 1/2" | 10" | 34" | 58" |
| 8' 0" | 88" | 3 1/2" | 10" | 34" | 58" |

# Opener Reinforcement Installation

## Attachment of Opener Reinforcement

Refer to the MANUAL for installation instructions. If the Clopay WindCode® door requires a strut across the top of the top section, this takes the place of any horizontal angle iron required by the MANUAL. The vertical angle as shown in the MANUAL is still required on WindCode® Doors.

# INSTALLATION INSTRUCTIONS

## Double Car Clopay WindCode® Supplemental Instructions

(For use with Insulated and Uninsulated Steel Residential Garage Door Instruction Manual)

## Things to Know Before You Begin

This is a supplement to the Clopay **Steel Residential Garage Door Instructions (Steel)** and **Insulated Steel Garage Door Instructions (Insulated)** (Referred to as MANUAL). It covers important information unique to Clopay WindCode® Doors. For all other information and safety warnings concerning your Clopay WindCode® garage door, see the MANUAL. Read all of the information below before beginning installation.

An electric impact gun will be needed for installation of WindCode™ Doors. If your door requires the attachment of C-Channels, a 7/16" socket and 6" extension will be needed along with an impact gun.

**NOTE:** It is the buyer's responsibility to purchase the garage door needed.

These instructions cover the following hardware attachment:

1) Double Top & Bottom Bracket Installations
2) Attachment of Double Hinges
3) Addition of Struts / C-Channel
4) Track Bracket Placement (for specific models only)

**Table 1**

| Windload Category | Test Windload (P.S.F.) | Approximate Test MPH Gust Speed |
|---|---|---|
| W1 | 16 to 23 | 90 |
| W2 | 24 to 28 | 100 |
| W3 | 29 to 33 | 110 |
| W4 | 34 to 42 | 120 |
| W5 | 43 to 54 | 140 |
| W6 | 55 to 60 | 150 |
| W7 | 60 to 68 | 155 |
| W8 | 69 to 81 | 170 |
| W9 | 81 + | 180 |

**Clopay®**

**Consumer Hotline**
**1-800-225-6729**

Each Clopay Windcode® door is included in one of nine categories: W1 - W9. Each category covers a different range of windload and subsequently, a specific strut configuration. (Tables 1 & 2).

To determine what door you have, locate the identification sticker found on the end of the door package. This sticker will identify the door size, door model, and windload category. (FIG. 1)

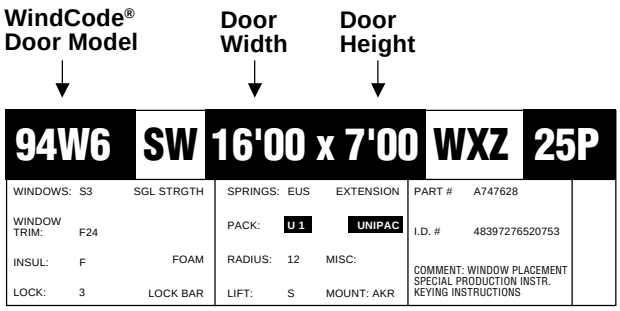


**IDENTIFICATION STICKER (Located On Package)**
**(Example: Model 94 Windload Category W6)**

**Fig. 1**

Clopay WindCode® garage doors not installed with the proper reinforcement (struts, hinges, jamb brackets, track, fasteners) will not perform as designed to meet the building code requirements.

# Reinforcement Attachment

Reinforcements are placed lengthwise across the door to add strength. Reinforcement configurations vary depending on WindCode® category and door size. Table 2 shows ten of the most common WindCode® doors and refers to a specific drawing in this manual. These drawings (Figures 13 to 22 in the back of this supplement) include specific reinforcement configuration and detailed technical information for each door. After reviewing the reinforcement configuration, turn to page 3 to begin the actual installation. For specifications and drawings for other door models please call the Clopay Consumer Hotline at 1-800-225-6729.

**Table 2**

| Model Number | Windload Category | Door Width | Reinforcement* Configuration | Correspond. Fig. / Draw. | Double End Stiles / Hinges | Pushnuts Req. | Threaded Rollers | Angle Mt. Track | Track Config. |
|---|---|---|---|---|---|---|---|---|---|
| 183/1000 | W3 | 9'2"-16'0" (Double Car) | Struts: 2-1-2-1* | Figure 13 / 101784 | Yes | Yes | No | No | Figure 10 |
| 73/75/80/82/ 84A/90/94 | W4 | 16'2"-18'0" (Double Car) | 4" C-Channel 1 per section | Figure 14 / 101312 | No | No | No | No | Figure 10 |
| 1000/183 | W5 | 9'2"-16'0" (Double Car) | 4" C-Channel 1 per section | Figure 15 / 101345 | Yes | No | No | No | Figure 10 |
| 73/75/80/82/90/ 84A/94 | W6 | 9'2"-16'2" (Double Car) | 4" C-Channel 1 per section | Figure 16 / 101539 | Yes | No | Yes | No | Figure 11 |
| 73/75/80/82/90/ 84A/94 | W6 | 16'4"-18'2" (Double Car) | 6" C-Channel 1 per section | Figure 17 / 101485 | Yes | Yes | No | No | Figure 11 |
| 2400/2401/4400/ 4401/4300/4301/ 4310/HDG/HDGL | W6 | 9'2"-16'2" (Double Car) | 4" C-Channel 1 per section | Figure 18 / 101486 | Yes | No | No | No | Figure 11 |
| 2400/2401/4400/ 4401/4300/4301/ 4310/HDG/HDGL | W6 | 16'4"-18'2" (Double Car) | 6" C-Channel 1 per section | Figure 19 / 101487 | Yes | No | Yes | No | Figure 11 |
| 73/75/80/82/ 84A/90/94 | W7 | 9'2"-16'2" (Double Car) | 6" C-Channel 1 per section | Figure 20 / 101309 | Yes | No | Yes | No | Figure 11 |
| 84A/94** | W8 | 9'2"-16'2" (Double Car) | 6" C-Channel 1 per section | Figure 21A-B 101300 | Yes | No | Yes | Yes | Figure 11 |
| 2400/2401/4400/ 4401/4300/4301/ 4310/HDG | W8 | 9'2"-16'2" (Double Car) | 6" C-Channel 1 per section | Figure 22A-D 101488 | Yes | Yes | No | No | Figure 11 |

** The bottom section is considered the first section, the second section from the bottom is considered the second section, etc.*
***Doors sometimes called 84AD and 94D.*

# Top Bracket Installation

## Double Top Bracket

If your door has double end hinges then install two top brackets instead of one. Double top brackets are installed side-by-side. Each Top bracket is installed exactly like a single top bracket. Once installed, the slide adjustments must be aligned so that the long stem roller can be inserted through both slide adjustments. (FIG. 2)

**NOTE:** Rollers with pushnuts or threaded rollers with flange nuts may be used on windload doors. (FIG. 3)

To install the pushnut roller simply slide the roller into the hinges and after the track is installed, slide the pushnut on the rod of the roller until it is within a 1/8" to 1/4" of the hinge.

To install a threaded roller proceed as before and after track is installed, thread the 7/16" flange nut on the rod until the 7/16" flange nut is within 1/8" to 1/4" of the hinge.

# Bottom Bracket Installation

## Double Bottom Bracket

Position bottom bracket as shown in MANUAL. Align the roller support bracket tube with the roller holes in the bottom bracket, so that the long stem roller can be inserted through the bottom bracket and roller support bracket. Attach with (2) 1/4" x 3/4" self-tapping screws. (FIG. 4)

**NOTE:** A second roller support bracket can be used as a shim to allow the long stem roller free movement.

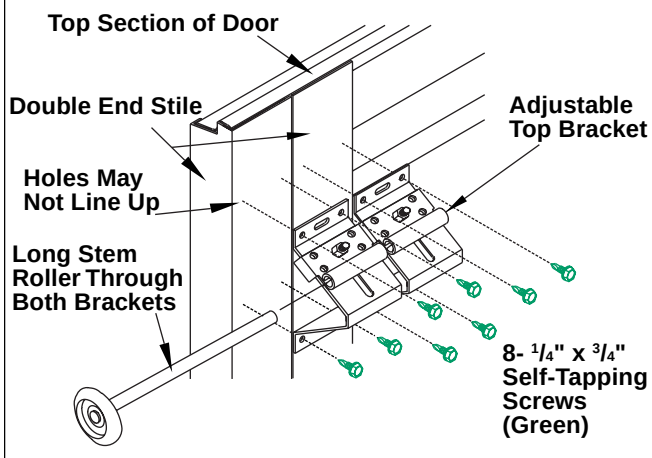


Fig. 2 DOUBLE TOP BRACKET INSTALLATION

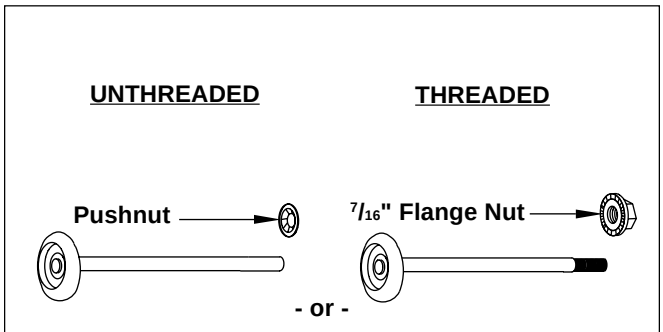


Fig. 3 THREADED & UNTHREADED ROLLERS

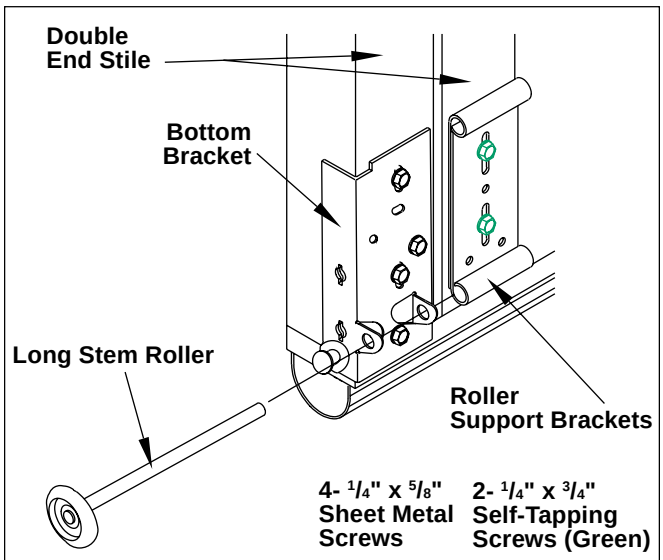


Fig. 4 BRACKET INSTALLATION

# End Hinge Installation

## Double End Hinges

14 Gauge hinges are used at end stile locations (for more detail, see MANUAL). Place two end hinges on the double end stile as shown. Attach each end hinge to end stile by inserting (4) #14 x $^5/_8$" sheet metal screws through the prepunched holes in the end stile. Insert (2) $^1/_4$" x $^3/_4$" self-tapping screws per hinge as shown. (You may have to pilot drill $^5/_{32}$" holes before installing self-tapping screws.) (FIG. 5)

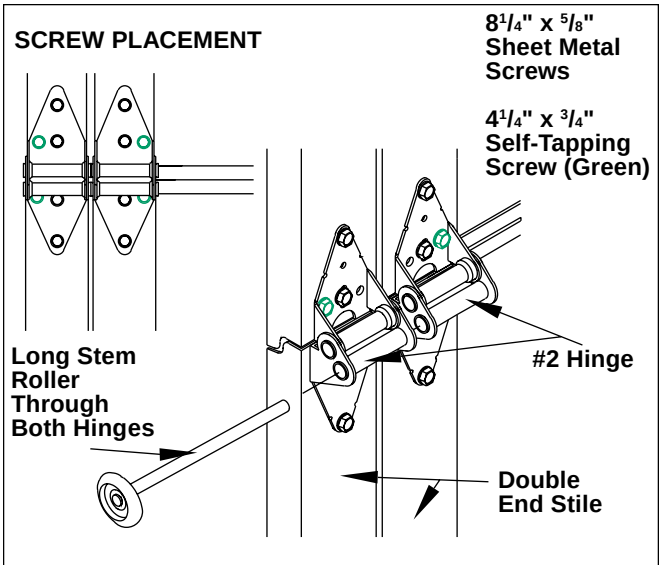


Fig. 5 DOUBLE END HINGE INSTALLATION

# Strut / C-Channel Attachment

Depending on the Model and windload category of your door, different reinforcements will be used. Consult the accompanying drawing outlined in Table 2 to see the required reinforcement type (strut or c-channel) and placement.

# Strut Installation

## Double Hinge Strut Attachment

To attach strut, position the strut on the door. Drill one $^5/_{32}$" hole at the top and one $^5/_{32}$" hole at the bottom of the strut at all stile locations. Attach strut to door section with $^1/_4$" x $^3/_4$" self-tapping screws through drilled holes. (FIG. 6)

**Note that the strut overlaps the hinge leafs.**

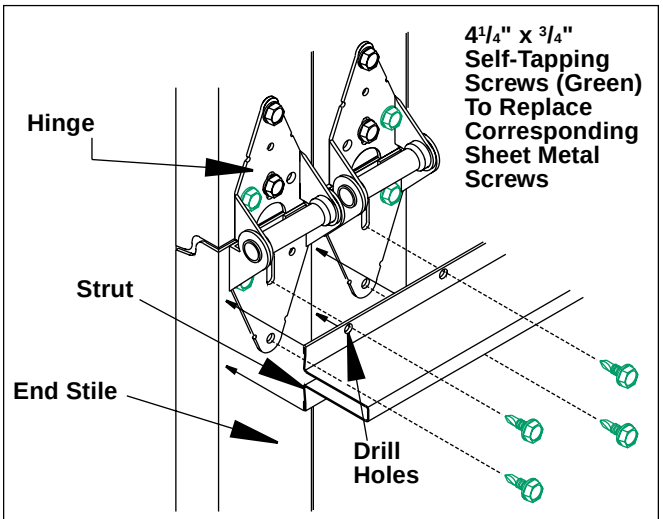


Fig. 6 DOUBLE HINGE STRUT INSTALLATION

# C-Channel Installation

## Pan Door C-Channel Attachment

Position the C-channel on the door. Attach C-channel to door section with (1) $^1/_4$" x $^3/_4$" self-tapping screws through drilled holes at each stile location. Then attach one C-channel strap at center hinge and end hinge locations (See Figures 14-22). C-Channel straps are attached to the C-channel with (1) $^1/_4$" x $^3/_4$" self-tapping screws, and attached to the door with (2) $^1/_4$" x $^3/_4$" self-tapping screws. (FIG. 7)

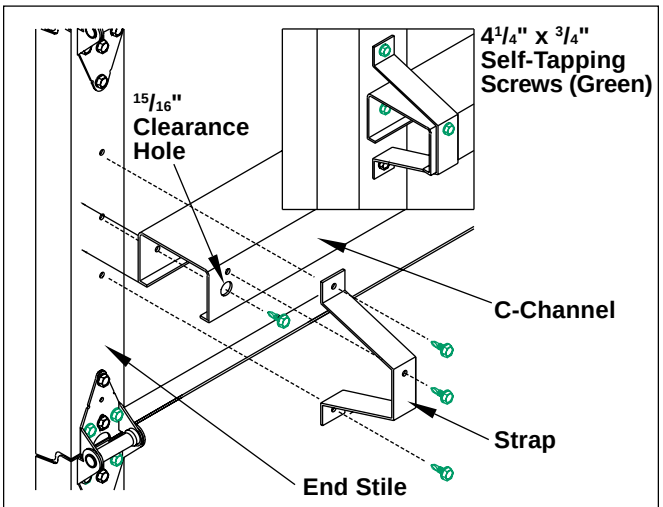


Fig. 7 C-CHANNEL INSTALLATION

## EPS Door C-Channel Attachment

Before attaching C-channel, a backer plate should be placed behind where the C-channel is to be installed. Position the C-channel on the door. Attach C-channel to door section with (1) 1/4" x 3/4" self-tapping screws through drilled holes at each hinge location. Then attach one C-channel strap at center hinge and end hinge locations. (See Figures 14-22).

C-Channel straps are attached to the C-channel with (1) 1/4" x 3/4" self-tapping screw, and attached to the door with (2) 1/4" x 3/4" self-tapping screws. (FIG. 8 and 9)

## Jamb Configuration

**IMPORTANT**

**The design of the supporting structural elements (i.e. door jamb) shall be the responsibility of the professional of record for the building or structure and in accordance with current building codes for the loads listed on the technical drawing (attached) for the specific model.**

**It is also important that the vertical 2 x 6 wood jambs are attached to the supporting structure in a method that is sufficient to transfer the loads exerted by the wind pressures. Some suggested vertical jamb attachment methods are included in the drawings. (FIG. 13 to 22)**

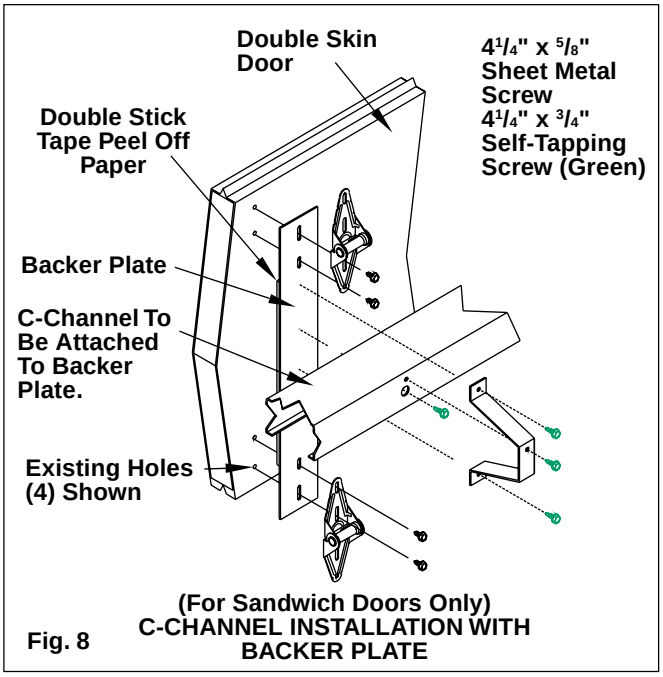


Fig. 8 (For Sandwich Doors Only) C-CHANNEL INSTALLATION WITH BACKER PLATE

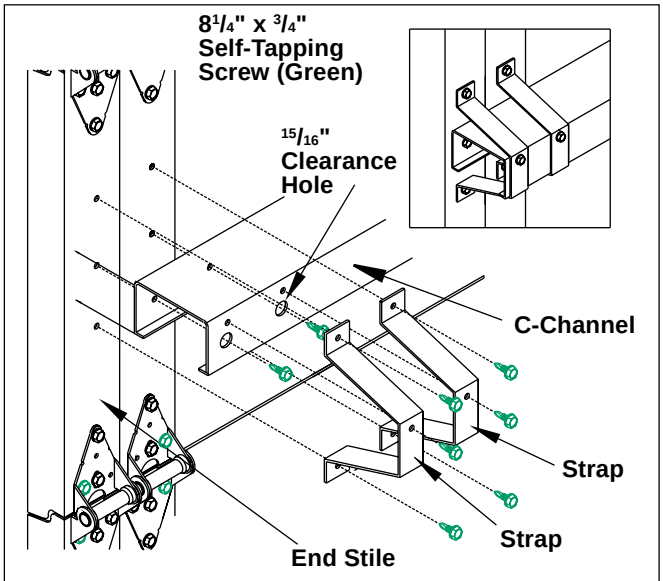


Fig. 9 DOUBLE END STILE C-CHANNEL ATTACHMENT

## Track Configuration

For corresponding track configuration refer to Table 2. (FIG. 10 & 11)

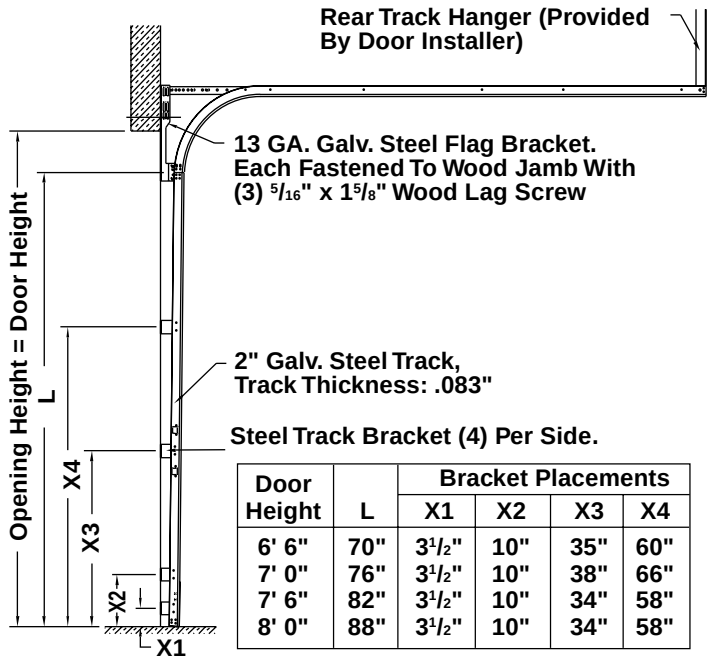


| Door Height | L | Bracket Placements | | | |
|---|---|---|---|---|---|
| | | X1 | X2 | X3 | X4 |
| 6' 6" | 70" | 3 1/2" | 10" | 35" | 60" |
| 7' 0" | 76" | 3 1/2" | 10" | 38" | 66" |
| 7' 6" | 82" | 3 1/2" | 10" | 34" | 58" |
| 8' 0" | 88" | 3 1/2" | 10" | 34" | 58" |

Fig. 10

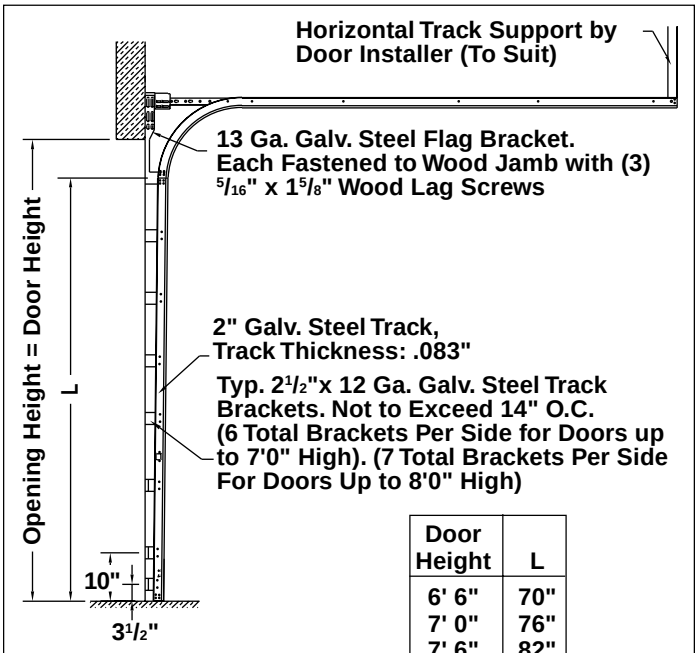


| Door Height | L |
|---|---|
| 6' 6" | 70" |
| 7' 0" | 76" |
| 7' 6" | 82" |
| 8' 0" | 88" |

Fig. 11

# Opener Reinforcement Installation

## Attachment of Opener Reinforcement

Refer to the MANUAL for installation instructions. If the Clopay WindCode® door requires a strut across the top section, this takes the place of any horizontal angle iron required by the MANUAL. The vertical angle as shown in the MANUAL is still required on WindCode® Doors. (FIG. 12)

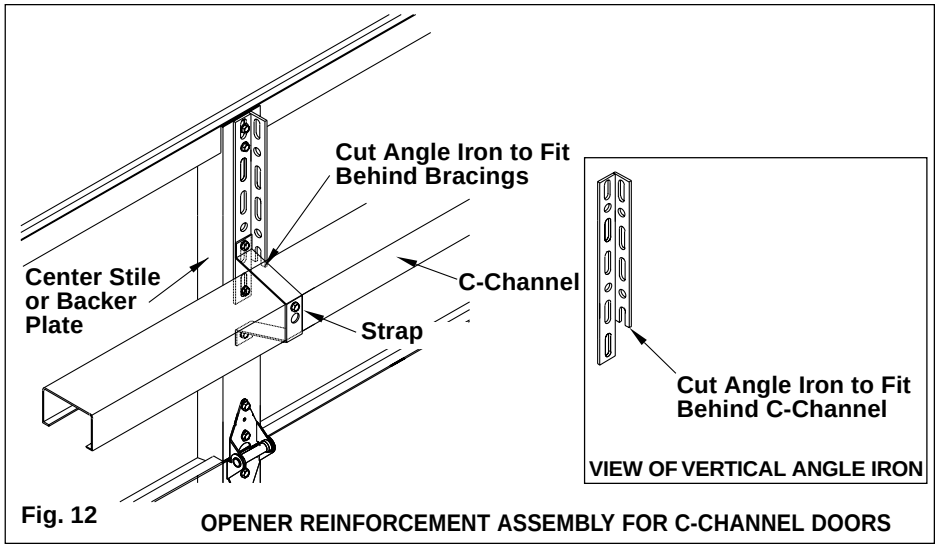


Fig. 12 OPENER REINFORCEMENT ASSEMBLY FOR C-CHANNEL DOORS