EVALUATION REPORT OF
UNION CORRUGATING COMPANY
'26 GA. PBR PANEL'

F FLORIDA BUILDING CODE 7TH EDITION (2020)
FLORIDA PRODUCT APPROVAL
FL 9555.8-R5
STRUCTURAL COMPONENTS
ROOF DECK

Prepared For:
Union Corrugating Company
701 S. King St.
Fayetteville, NC 28301
Telephone: (910) 483-0479
Fax: (910) 483-1091

Prepared By:
Bala Sockalingam, Ph.D., P.E.
Florida Professional Engineer #62240
1216 N Lansing Ave., Suite C
Tulsa, OK 74106
Telephone: (918) 492-5992
FAX: (866) 366-1543

This report consists of
Evaluation Report (3 Pages including cover)
Installation Details (1 Page)
Load Span Table (1 Page)

Report No. C2373-8
Date: 8.8.2020

BALA SOCKALINGAM
LICENSE
No 62240
STATE OF FLORIDA
PROFESSIONAL ENGINEER

8.8.2020

Manufacturer:	Union Corrugating Company
Product Name:	PBR Panel
Panel Description:	36" wide coverage with (4) 1-1/4" high ribs
Materials:	Min. 26 ga., 80 ksi steel or min. 24 ga., 50 ksi steel. Galvanized coated steel (ASTM A653) or Galvalume coated steel (ASTM A792) or painted steel (ASTM A755). Corrosion resistant as per FBC 2020 Section 1507.4.3.
Support Description:	Min. 16 ga., 50 ksi steel section. (Must be designed by others)
Slope:	1/2:12 or greater in accordance with FBC 2020 Section 1507.4.2
Design Pressure: (Factor of Safety = 2) (3 or more spans)	-45.5 psf at support spacing of 60 o.c. -163.0 psf at support spacing of 20 o.c. 32 psf at support spacing of 60 o.c. 96 psf at support spacing of 20 o.c.
Panel Attachment:	#12-14 x 1-1/4" long SDS with washer. Fasteners are corrosion resistant as per FBC 2020 Section 1507.4.4.
At panel ends	at 7"-5"-7" o.c. across panel width
At interior supports	at 12" o.c. across panel width
Sidelap Attachment:	¼"-14 x 7/8" long SDS with washer at 24" o.c. Fasteners are corrosion resistant as per FBC 2020 Section 1507.4.4.
Test Standards:	Roof assembly tested in accordance with ASTM E1592-05 (2012) 'Test Method for Structural Performance of Sheet Metal Roof and Siding Systems by Uniform Static Air Pressure Difference' and FM 4470 Section 5.5 'Resistance to Foot Traffic'.
Test Equivalency:	The test procedure in FM 4470 (1992) comply with test procedure prescribed in FM 4470 (2016) Section 4.6 'Resistance to Foot Traffic'.
Code Compliance:	The product described herein has demonstrated compliance with FBC 2020 Section 1507.4
Product Limitations:	Design wind loads shall be determined for each project in accordance with FBC 2020 Section 1609 or ASCE 7-16 using allowable stress design. The maximum support spacing listed herein shall not be exceeded. The design pressure for support spacing may be computed using rational analysis prepared by a Florida Professional Engineer or based on Union load span table. This evaluation report is not applicable in High Velocity Hurricane Zone. Fire classification is not

within scope of this Evaluation Report. Refer to FBC 2020 Section 1505 and current approved roofing materials directory or ASTM E108/UL790 report from an accredited laboratory for fire ratings of this product.

Supporting Documents: ASTM E1592 Test Reports
ENCON Technology Inc.
Project No. C2054-1, Reporting Date 10/16/15

FM 4470 Test Report
ENCON Technology Inc.
C1583-1, Reporting Date 7/24/08

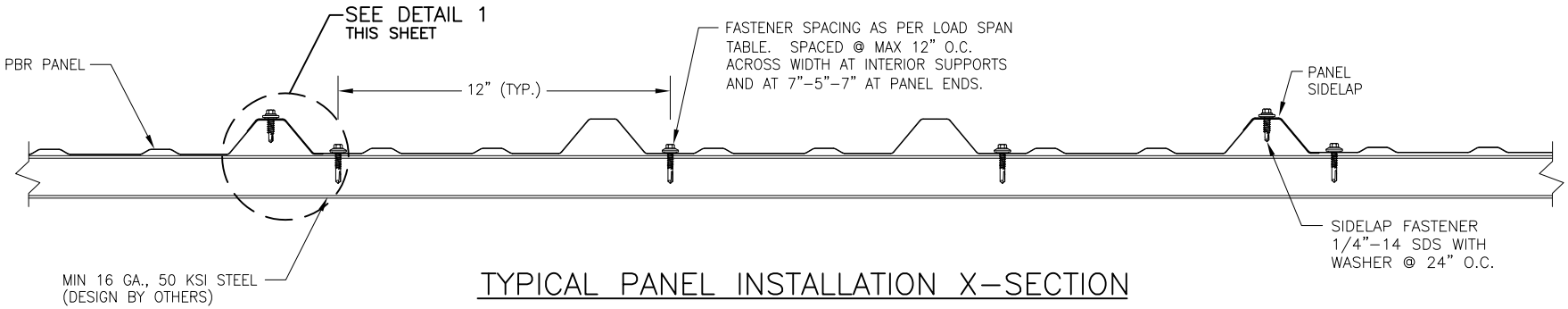

TYPICAL PANEL INSTALLATION X-SECTION

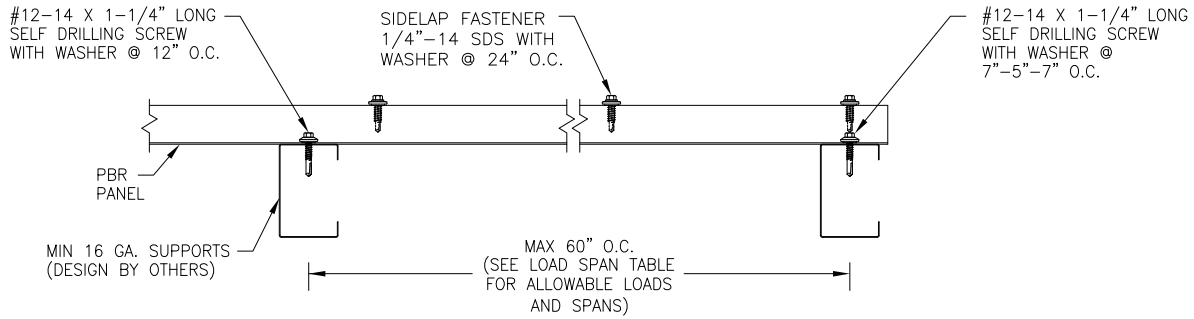

SECTION VIEW

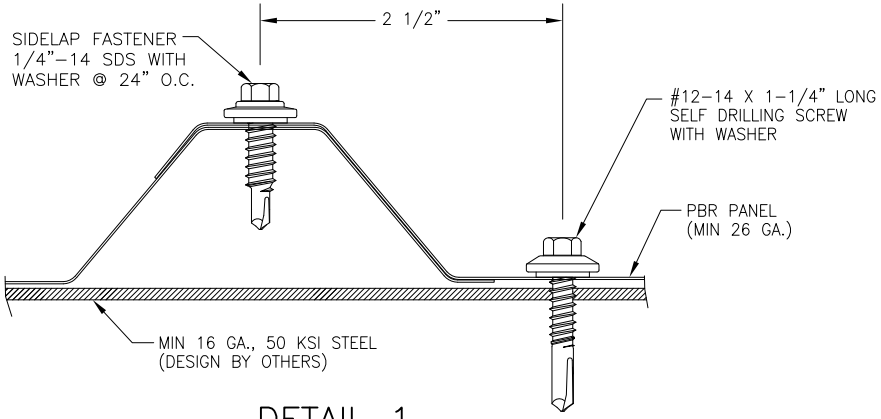

DETAIL 1

GENERAL NOTES:

1. STRUCTURAL ROOF PANEL HAS BEEN DESIGNED IN ACCORDANCE WITH THE FLORIDA BUILDING CODE (FBC).
2. PANELS SHALL BE MIN. 26 GA. (t = 0.0175"). EFFECTIVE COVERING WIDTH OF PANEL = 36".
3. ROOF PANELS SHALL BE INSTALLED OVER STRUCTURE AS SPECIFIED ON THIS DRAWING.
4. REQUIRED DESIGN WIND LOADS SHALL BE DETERMINED FOR EACH PROJECT. THIS PANEL SYSTEM MAY NOT BE INSTALLED WHEN THE REQUIRED DESIGN WIND LOADS ARE GREATER THAN THE ALLOWABLE WIND LOADS SPECIFIED ON THIS DRAWING.
5. ALL FASTENERS MUST BE IN ACCORDANCE WITH THIS DRAWING & THE FLORIDA BUILDING CODE. IF A DIFFERENCE OCCURS BETWEEN THE MINIMUM REQUIREMENTS OF THIS DRAWING & THE CODE, THE CODE SHALL CONTROL.
6. PURLINS/JOISTS/TRUSSES MUST BE DESIGNED TO WITHSTAND WIND LOADS AS REQUIRED FOR EACH APPLICATION AND ARE THE RESPONSIBILITY OF OTHERS.

DRAWN BY: B.S.	CHECKED BY: J.S.
PLOT:	DATE: 10/17/15

NO.	REVISION DESCRIPTION	BY	DATE

DRAWING TITLE: PBR ROOF PANEL

MANUFACTURER: UNION CORRUGATING CO.
701 S. KING STREET
FAYETTEVILLE, NC 28301
910-483-0479

CONSULTANTS
BALA SOCKALINGAM, PH.D., P.E.
1216 N LANSING AVE, SUITE C
TULSA, OK 74106
PHONE: 918-492-5992 FAX: 866-366-1543

DRAWING NO. 2373-8 REV.

UNION CORRUGATING COMPANY
PBR Roof Panel
Allowable Design Loads

Support Spacing (in)	Allowable Design Loads (psf)	
	Gravity	Uplift
20	96.0	-163.0
22	87.3	-148.2
24	80.0	-135.8
27	71.1	-120.7
30	64.0	-108.7
33	58.2	-98.8
36	53.3	-90.6
39	49.2	-83.6
42	45.7	-77.6
45	42.7	-72.4
48	40.0	-67.9
51	37.6	-63.0
54	35.6	-56.2
57	33.7	-50.4
60	32.0	-45.5

Notes:

1. Allowable load is the lowest value of panel strength, connection strength & deflection limit of L/180.
2. Allowable load is applicable to three or more spans conditions.
3. Panels must be installed as per Evaluation Report FL 9555.8 and Union current installation procedure.
4. The structural capacity of support beam are not considered and must be examined independently.
5. Minimum support thickness is 16 ga.

BALA SOCKALINGAM
LICENSE
No 62240
STATE OF FLORIDA
PROFESSIONAL ENGINEER

8.8.2020

1216 N Lansing Ave., Suite C
Tulsa, Ok 74106
918 492 5992

Bala Sockalingam, Ph.D., P.E.
FL 62240