EVALUATION REPORT OF
UNION CORRUGATING COMPANY
'29 GA. MASTERRIB PANEL'
OVER WOOD SUPPORTS

FLORIDA BUILDING CODE 7TH EDITION (2020)
FLORIDA PRODUCT APPROVAL
FL 9555.5-R5
STRUCTURAL COMPONENTS
ROOF DECK

Prepared For:
Union Corrugating Company
701 S. King St.
Fayetteville, NC 28301
Telephone: (910) 483-0479
Fax: (910) 483-1091

Prepared By:
Bala Sockalingam, Ph.D., P.E.
Florida Professional Engineer #62240
1216 N Lansing Ave., Suite C
Tulsa, OK 74106
Telephone: (918) 492-5992
FAX: (866) 366-1543

This report consists of
Evaluation Report (3 Pages including cover)
Installation Details (1 Page)
Load Span Table (1 Page)

Report No. C2373-5
Date: 8.8.2020

BALA SOCKALINGAM
LICENSE
No 62240
STATE OF
FLORIDA
PROFESSIONAL ENGINEER

8.8.2020

Manufacturer:	Union Corrugating Company
Product Name:	MasterRib Panel
Panel Description:	36" wide coverage with 3/4" high ribs at 9" o.c.
Materials:	Minimum 29 ga., 80 ksi steel. Galvanized coated steel (ASTM A653) or Galvalume coated steel (ASTM A792) or painted steel (ASTM A755). Corrosion resistant as per FBC 2020 Section 1507.4.3.
Support Description:	Nom. 2" x 2" (min) SPF, SYP or DF lumber. (Must be designed by others)
Slope:	1/2:12 or greater in accordance with FBC 2020 Section 1507.4.2
Design Pressure: (Based on testing)	+27.1 and -36.2 psf at support spacing of 48" o.c. (at 3 span condition with FS = 2.0)
Panel Attachment:	#9-15 or #10-14 x 1.5" long wood screws with washers. Fasteners are corrosion resistant as per FBC 2020 Section 1507.4.4.
At panel ends	at 3.5"-5.5"-3.5" o.c. across panel width
At intermediate	at 9" o.c. across panel width
Sidelap Attachment:	¼"-14 x 7/8" long SDS with washer at 24" o.c. Fasteners are corrosion resistant as per FBC 2020 Section 1507.4.4.
Test Standards:	Panel assembly tested in accordance with ASTM E1592-01 'Test Method for Structural Performance of Sheet Metal Roof and Siding Systems by Uniform Static Air Pressure Difference' and FM 4470 Section 5.5 'Resistance to Foot Traffic'.
Test Equivalency:	The test procedure in ASTM E1592-01 comply with test procedure prescribed in ASTM E1592-05(2012). The test procedure in FM 4470 (1992) comply with test procedure prescribed in FM 4470 (2016) Section 4.6 'Resistance to Foot Traffic'.
Code Compliance:	The product described herein has demonstrated compliance with FBC 2020 Section 1507.4.
Product Limitations:	Design wind loads shall be determined for each project in accordance with FBC 2020 Section 1609 or ASCE 7-16 using allowable stress design. The maximum support spacing listed herein shall not be exceeded. The design pressure for reduced support spacing may be computed using rational analysis prepared by a Florida Professional Engineer or based on Union Corrugating load span table. This product is not approved for use in the High Velocity Hurricane Zone. Fire

classification is not within scope of this Evaluation Report. Refer to FBC 2020 Section 1505 and current approved roofing materials directory for fire ratings of this product.

Supporting Documents: ASTM E1592 Test Report
ENCON Technology Inc.
C1514-1 (Test #2 & 3), Reporting Date 9/8/07

FM 4470 Test Report
ENCON Technology Inc.
C1583-2, Reporting Date 7/24/08

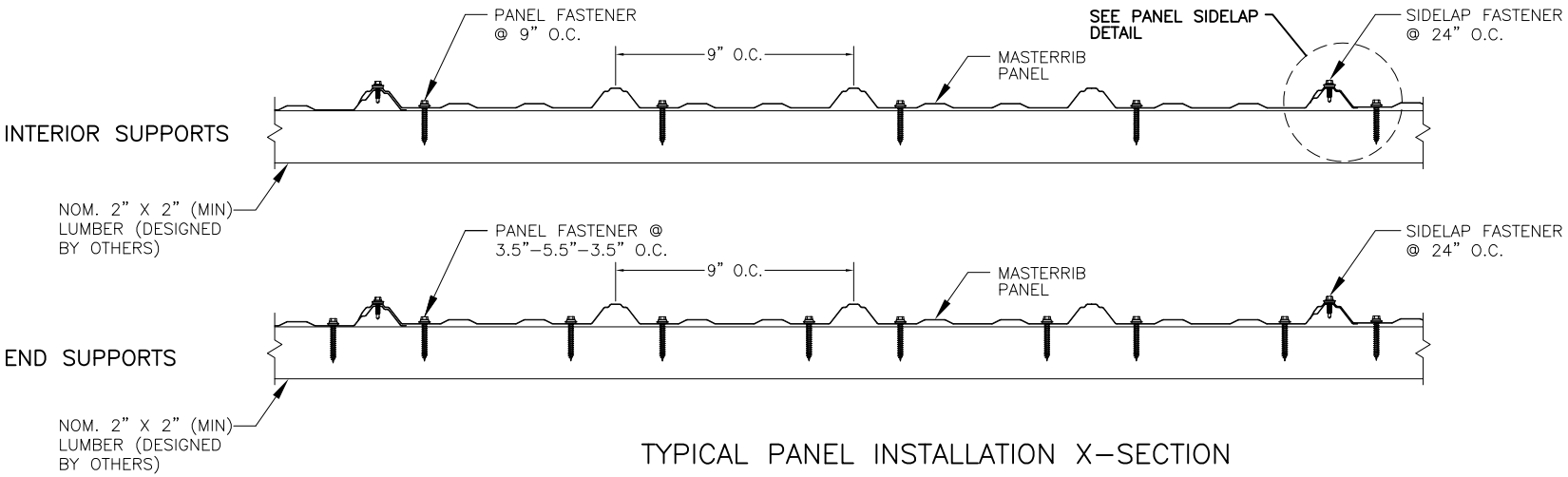

TYPICAL PANEL INSTALLATION X–SECTION

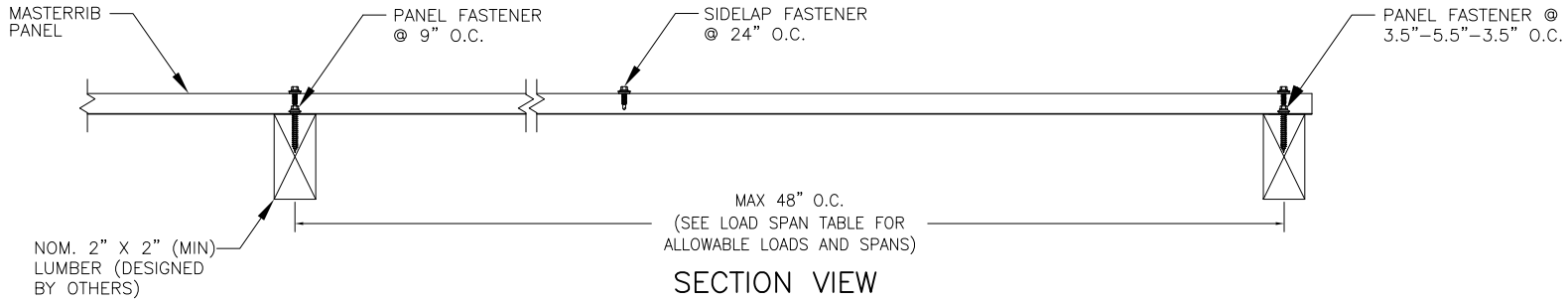

SECTION VIEW

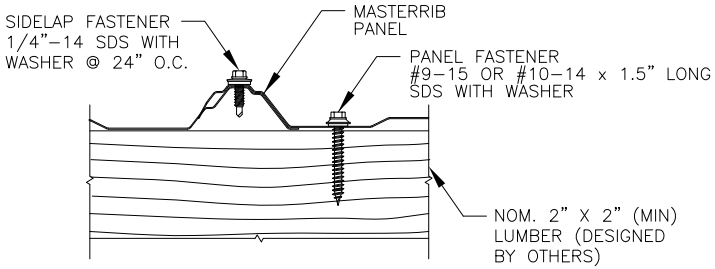

PANEL SIDELAP

GENERAL NOTES:

1. ROOF PANEL HAS BEEN DESIGNED IN ACCORDANCE WITH THE FLORIDA BUILDING CODE (FBC).
2. ROOF PANELS SHALL BE 29 GA. (t = 0.013"). EFFECTIVE COVERING WIDTH OF PANEL = 36".
3. ROOF PANELS SHALL BE INSTALLED OVER STRUCTURE AS SPECIFIED ON THIS DRAWING.
4. REQUIRED DESIGN WIND LOADS SHALL BE DETERMINED FOR EACH PROJECT. THIS PANEL SYSTEM MAY NOT BE INSTALLED WHEN THE REQUIRED DESIGN WIND LOADS ARE GREATER THAN THE ALLOWABLE DESIGN LOADS.
5. ALL FASTENERS MUST BE IN ACCORDANCE WITH THIS DRAWING & THE FLORIDA BUILDING CODE. IF A DIFFERENCE OCCURS BETWEEN THE MINIMUM REQUIREMENTS OF THIS DRAWING & THE CODE, THE CODE SHALL CONTROL.
6. SUPPORTS MUST BE DESIGNED TO WITHSTAND WIND LOADS AS REQUIRED REQUIRED FOR EACH APPLICATION AND ARE THE RESPONSIBILITY OF OTHERS.
7. PANELS MAY SPAN BETWEEN EAVE TO RIDGE SUPPORTS OR RAKE TO RAKE SUPPORTS.

DRAWN BY: B.S.	CHECKED BY:
PLOT:	DATE:

NO.	REVISION DESCRIPTION	BY	DATE

DRAWING TITLE
MASTERRIB ROOF PANEL OVER WOOD SUPPORTS

MANUFACTURER
UNION CORRUGATING CO.
701 S. KING STREET
FAYETTEVILLE, NC 28301
910-483-2195

CONSULTANTS
BALA SOCKALINGAM, PH.D., P.E.
1216 N. LANSING AVE., SUITE C
TULSA, OK 74106
PHONE: 918-492-5992 FAX: 866-366-1543

DRAWING NO. 2373-5 REV.

SHEET NO. 1 OF 1

UNION CORRUGATING COMPANY

MasterRib Roof Panel

36" wide, 29 ga. (min) Steel Panel over Wood Supports

Span Condition	Loading Type	Allowable Load (psf)								
		Support Spacing (ft)								
		1.50	1.75	2.00	2.25	2.50	2.75	3.00	3.50	4.00
Two Span	Gravity	106.4	91.2	79.8	70.9	63.9	58.0	53.2	45.6	34.7
	Uplift	84.9	72.8	63.7	56.6	51.0	46.3	42.5	36.4	29.0
Three Span	Gravity	120.9	103.7	90.7	80.6	72.6	66.0	60.5	40.5	27.1
	Uplift	96.5	82.7	72.4	64.4	57.9	52.7	48.3	41.4	36.2
Four or More Spans	Gravity	116.4	99.8	87.3	77.6	69.8	63.5	58.2	43.0	28.8
	Uplift	92.9	79.6	69.7	61.9	55.7	50.7	46.5	39.8	33.8

Notes:

1. Allowable load for each condition is the smallest load calculated based on fastener capacity, panel strength and and deflection limit of L/180. Allowable loads are calculated for minimum 29 ga. panel.
2. The wind load is taken as 0.7 times the "component and cladding" loads for the purpose of determining deflection limit.
3. The panel allowable properties are determined from full scale ASTM E1592 tests at 4' 0" span
4. The panel fasteners are #9-16 or 10-14 x 1-1/2" long wood screws with washers. Fastener spacing across panel width is 9.0" o.c. in the interior supports and 3.5"-5.5"-3.5" o.c. at panel ends.
5. Sidelap fasteners are 1/4"-14 x 7/8" long self drilling screws with washers at 24"o.c.
6. Wood supports are minimum 2" x 2" lumber. All supports must be designed to resist all loads imposed on the panel.
7. Minimum bearing width of support is 1.5".
8. The panels may span from eave to ridge or rake to rake.
9. Panels must be installed as per Evaluation Report FL 9555.5 and Union current installation procedure.

BALA SOCKALINGAM
LICENSE
No 62240
STATE OF FLORIDA
PROFESSIONAL ENGINEER

8.8.2020

1216 N Lansing Ave, Suite C
Tulsa, OK 74106
918 492 5992

Bala Sockalingam, Ph.D., P.E.
PE 62240