Evaluation Report

"S" Deck"

Metal Soffit Assembly

Manufacturer:

Berridge Manufacturing Company

1720 Maury Road

Houston, TX 77026

(800) 231-8127

for

Florida Product Approval

FL 9000.1 R7

Florida Building Code 9th Edition (2026)

Method: **1 - D**

Category: **Panel Walls**

Sub - Category: **Soffit**

Product: "S" Deck Soffit Panel

Material: Steel

Prepared by:
James L. Buckner, P.E., S.E.C.B.
Florida Professional Engineer # 31242
Florida Evaluation ANE ID: 1916
Project Manager: Diana Galloway
Report No. 26-809-SDeck-ER
(Revises 23-542-SDeck-ER, FL9000.1 R6)
Date: 08/12/2026

This item has been digitally signed and sealed by James L. Buckner, P.E., on this date below. Printed copies of this document are not considered signed and sealed, and the signature must be verified on any electronic copies.

JAMES L. BUCKNER
LICENSE
No 31242
STATE OF FLORIDA
PROFESSIONAL ENGINEER

James L. Buckner, P.E.
FL31242

2026.08.12 14:13:24 -04'00'

Contents:

Evaluation Report Pages 1 – 8

Manufacturer: **Berridge Manufacturing Company**
1720 Maury Road
Houston, TX 77026
(800) 231-8127
www.berridge.com

Product Name: **"S" Deck"**

Product Category: Panel Walls

Product Sub-Category Soffits

Compliance Method: State Product Approval Rule 61G20-3.005 (1) (d)

Product/System Description: "S" Deck" Soffit Panel
Corrugated Steel lapped Soffit panel fastened into structural Steel Supports.

Product Assembly as Evaluated: Refer to Page 4 of this report for product assembly components/materials & standards:

1. Soffit Panel
2. Fasteners

Support: **Type:**
Steel Supports
(Design of steel support and its attachment to support framing is outside the scope of this evaluation.)

Description:
Material: Steel
Thickness: 16 gauge (min.) or 20 gauge (min.)
Yield Strength: 40 ksi minimum
Girt/Stud Size: 2" min. flange bearing

Performance: Wind Resistance:
- Design Pressure: **Refer to Table A**
  (Refer to "Table A" attachment details herein)

Performance Standards: The following test protocol was performed to demonstrate compliance with the intent of the code:

- ASTM E 1592-05 (2017) – Test Method for Structural Performance of Sheet Metal Roof and Siding Systems by Uniform Static Air Pressure Difference.
- TAS 125-03 – Standard Requirements for Metal Roofing Systems

Standards Equivalency: The ASTM E 1592-01 standard version used to test the product meets the prescribed standards in ASTM E 1592-05 (2017) standard version adopted by the Florida Building Code 9th Edition (2026) for use as evaluated in this report.

Code Compliance: The product(s) described herein have demonstrated compliance with the performance standards listed above as referenced in the:
Florida Building Code 9th Edition (2026)

Evaluation Report Scope: This product evaluation is limited to compliance with the structural requirements of the Florida Building Code, as related to the scope section to Florida Product Approval Rule 61G20-3.001.

Limitations and Conditions of Use:

- Diaphragm and axial load capacity is outside the scope of this evaluation.
- Soffit panels shall comply with labeling requirements per FBC Section 1709.10.
- Design of support system is outside the scope of this report. Support shall be designed by others and shall comply with the FBC Chapters 22 for steel and Chapter 16 for structural loading.

<u>Scope of "Limitations and Conditions of Use" for this evaluation:</u>
This evaluation report for "Optional Statewide Approval" contains technical documentation, specifications and installation method(s) which include "Limitations and Conditions of Use" throughout the report in accordance with Rule 61G20-3.005. Per Rule 61G20-3.004, the Florida Building Commission is the authority to approve products under "Optional Statewide Approval".

- This report is a building code product evaluation per FLPE rule (FAC) 61G15-36 to comply with Florida product approval rule (FAC) 61G20-3. This evaluation report is part of the Florida Building Commission approval for the listed code related criteria. This report by James Buckner, P.E. and CBUCK Engineering is not a design certification of code compliance construction submittal documentation, per FBC section 107, for any individual structure, site specific or permit design.
- All metal components and fasteners shall be corrosion resistant in accordance with applicable sections of FBC. Installations located within 3000 feet of a saltwater coastline shall comply with Section 1711.
- Fire Classification is outside the scope of Rule 61G20-3 and is therefore not included in this evaluation.
- This evaluation report does not evaluate the use of this product for use in the High Velocity Hurricane Zone code section. (Dade & Broward Counties)

<u>Option for application outside "Limitations and Conditions of Use"</u>
Rule 61G20-3.005(1)(e) allows engineering analysis for "project specific approval by the local authorities having jurisdiction in accordance with the alternate methods and materials authorized in the Code". Any modification of the product as evaluated in this report and approved by the Florida Building Commission is outside the scope of this evaluation and will be the responsibility of others.

Quality Assurance: The manufacturer has demonstrated compliance of Soffit panel products in accordance with the Florida Building Code and Rule 61G20-3.0005 (3) for manufacturing under a quality assurance program audited by an approved quality assurance entity through UL, LLC (FBC Organization #: QUA 9625).

Components/Materials (by Manufacturer):

Soffit Panel:	Berridge "S" Deck"
Material:	Steel
Thickness:	24 Gauge min.
Panel Width:	31-1/2" Coverage
Rib Height:	7/8"
Yield Strength:	40 ksi min.
Steel Grade:	40
Corrosion Resistance:	In compliance with FBC Section 1506.6 and 1507.4.4

Fastener:

FASTENER 1:	Soffit Panel to Support
Type:	Hex-Head Sheet Metal Screw with WSW
Size:	#12 – 14 x 3/4"
Corrosion Resistance:	Per FBC Section 1405.17 & 1403.12
Standard:	Approved per FBC Section 1405.17
FASTENER 2:	Panel to Panel, Stitch Lap
Type:	Hex-Head Sheet Metal Screw with WSW
Size :	#12 – 14 x 1"
Corrosion Resistance:	Per FBC Section 1405.17 & 1403.12
Standard:	Approved per FBC Section 1405.17

Installation:

Installation Method:
(Refer to **"TABLE A"** below and drawings at the end of this report.)

- Fastener spacing: **Refer to "TABLE A" Below**
  (along the support span, in the valley of every other corrugation)
- Side Lap Spacing: 12" o.c.
  (along the length of the side laps and within 3" from each end)
- Minimum fastener penetration thru support, 3/4".
  (through flange of steel supports)

TABLE "A" **ALLOWABLE LOADS**						
	METHOD 1:		**METHOD 2:**		**METHOD 3:**	
Design Pressure (PSF):	Positive	Negative	Positive	Negative	Positive	Negative
	+ 121.6	**- 121.6**	**+73**	**- 73**	**+ 121.6**	**- 121.6**
Fastener Spacing:	5-1/3"		5-1/3"		2-2/3"	
Support Thickness:	16 gauge min.		20 gauge min.		20 gauge min.	
Side Lap Spacing:	12"		12"		12"	
Max. Soffit Span:	30" (2' - 6")		30" (2' - 6")		30" (2' - 6")	
Span Condition:	Simple		Simple		Simple	

NOTES:
- Negative Pressure Outward/Positive Pressure Inward
- Allowable design pressure(s) for allowable stress design (ASD) with a margin of safety of 2 to 1.
- No pressure equalization factors have been applied.
- Fastener Attachment to Steel Supports May Be Designed By A Qualified Design Professional As Required By The Florida Building Code For Site Specific Projects.

Install the "S" Deck" Soffit panel assembly in compliance with the installation method listed in this report and applicable code sections of FBC 9th Edition (2026). The installation method described herein is in accordance with the scope of this evaluation report. Refer to manufacturer's installation instructions as a supplemental guide for attachment.

Referenced Data:

1. TAS 125-03 Uplift Test (per ASTM E 1592-01)
   By Force Engineering & Testing Inc., Inc. (FBC Organization #TST ID:5328)
   Report # 49-0007T-07 D, Report Date: 3/21/07
   Test Specimen(s) D
2. Engineering Analysis
   By CBUCK Engineering
3. Quality Assurance
   UL, LLC (FBC Organization #: QUA 9625)
4. Certification of Independence
   By James L. Buckner, P.E. @ CBUCK Engineering
   (FBC Organization #ANE 1916)

Installation Method

Berridge Manufacturing Company

"S" Deck Soffit Panel (24 Ga Min.) Attached to 16 Ga. Steel Supports

METHOD 1:

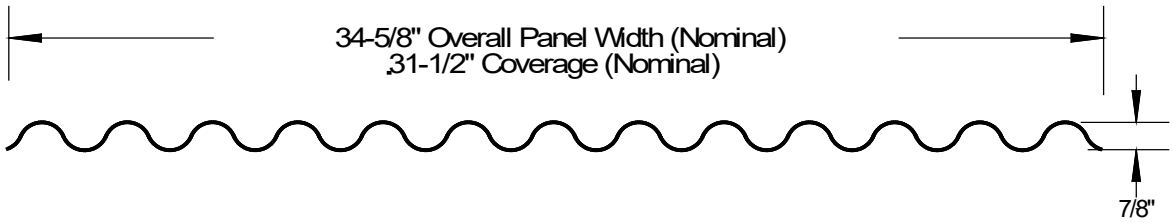

Panel Profile View

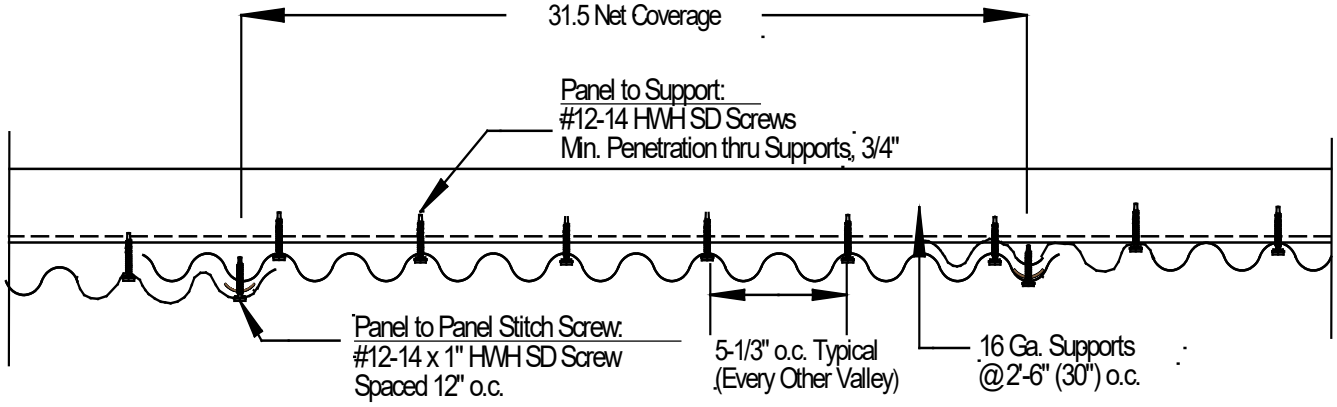

Typical Assembly Profile View
(Typical Fastening Pattern Along Supports)

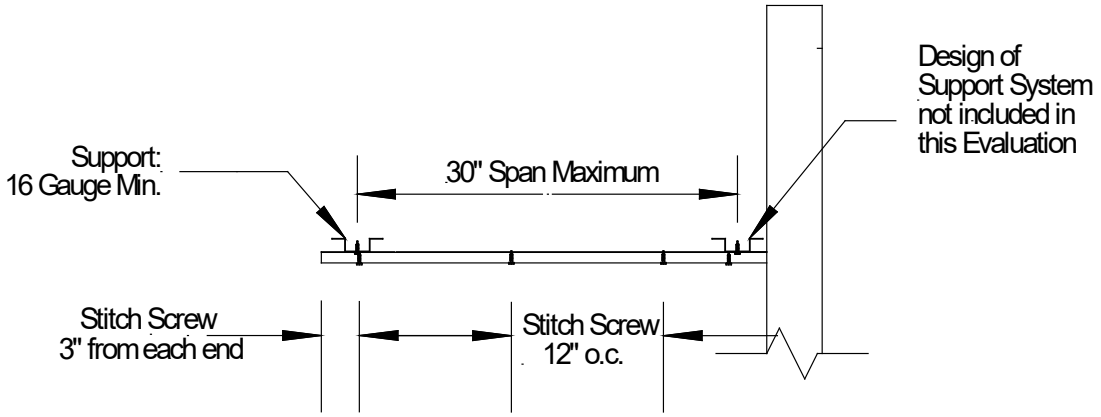

Typical Assembly Section View

Installation Method

Berridge Manufacturing Company

"S" Deck Soffit Panel (24 Ga Min.) Attached to 20 Ga. Steel Supports

METHOD 2:

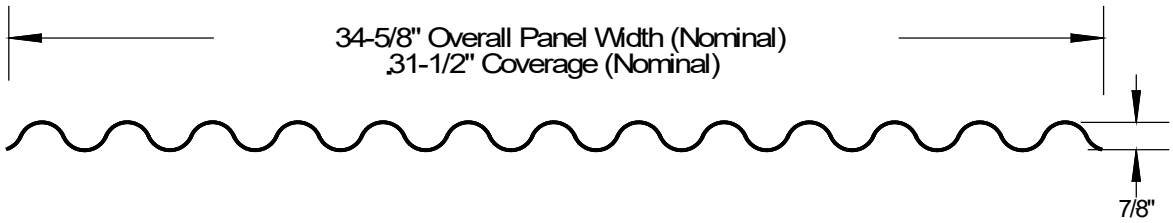

Panel Profile View

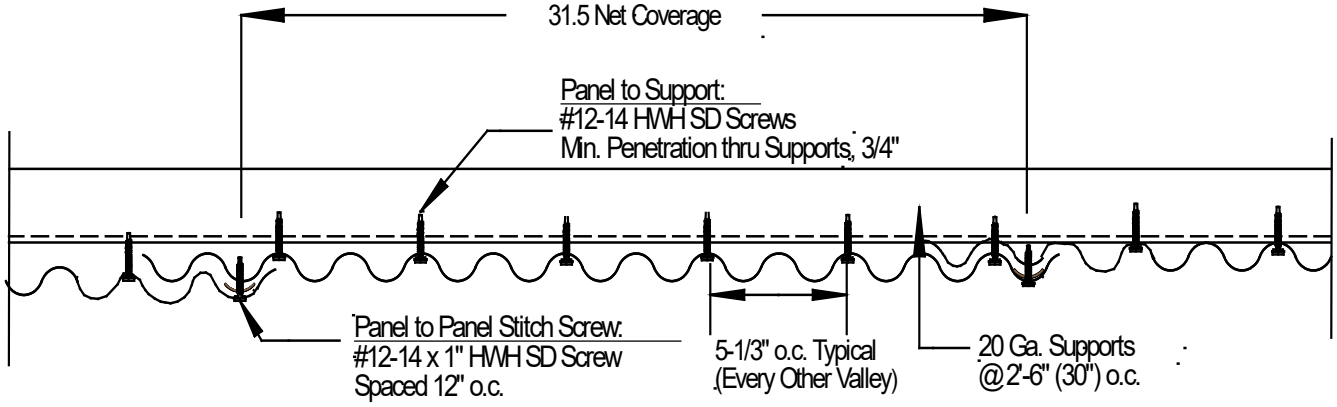

Typical Assembly Profile View
(Typical Fastening Pattern Along Supports – Interior)

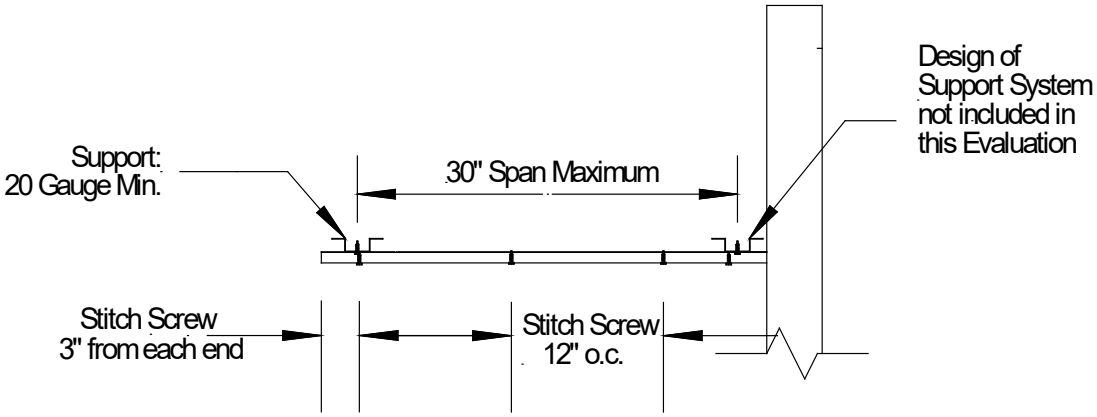

Typical Assembly Section View

Installation Method

Berridge Manufacturing Company

"S" Deck Soffit Panel (24 Ga Min.) Attached to 20 Ga. Steel Supports

METHOD 3:

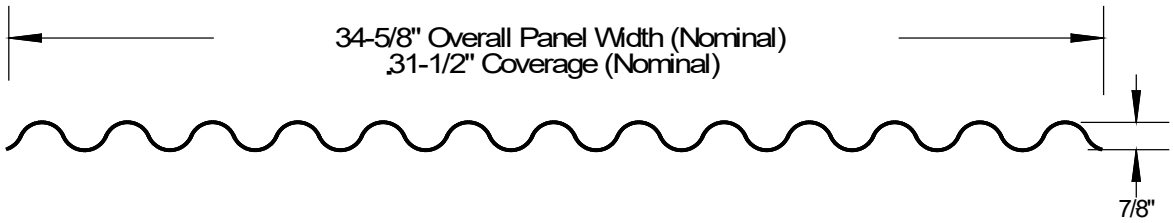

Typical Panel Profile View

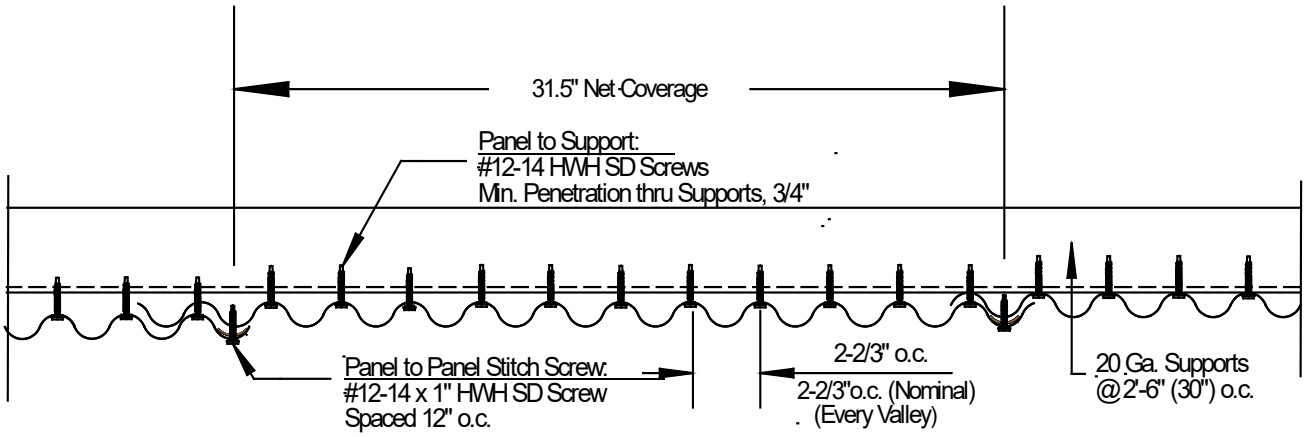

Typical Assembly Profile View
(Typical Fastening Pattern Along Supports)

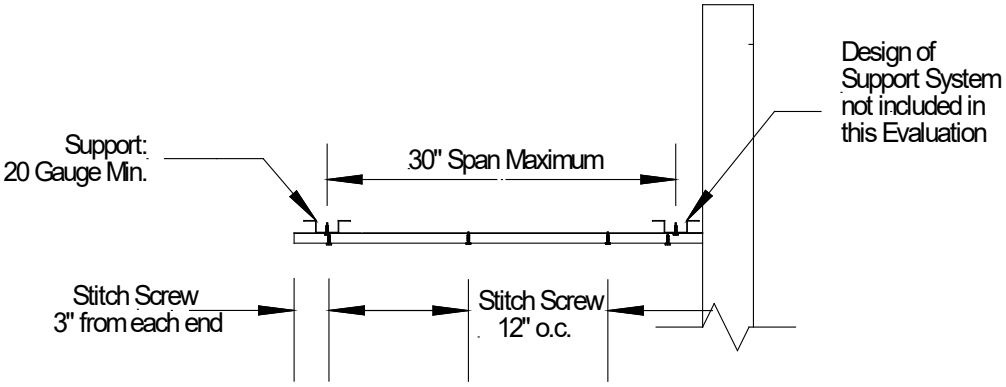

Typical Assembly Section View