EVALUATION REPORT OF
GRABER POST BUILDINGS, INC.
'26 GA. R PANEL'

FLORIDA BUILDING CODE 9TH EDITION (2026)
FLORIDA PRODUCT APPROVAL
FL 8687.3-R7
PANEL WALLS
SIDING

Prepared For:
Graber Post Buildings, Inc.
7716 N 900 E
Montgomery, IN 47558
Telephone: (800) 264-5013
Fax: (812) 636-4936

Prepared By:
Bala Sockalingam, Ph.D., P.E.
Florida Professional Engineer #62240
1216 N Lansing Ave., Suite C
Tulsa, OK 74106
Telephone: (918) 492-5992

This report consists of
Evaluation Report (2 Pages including cover)
Installation Details (1 Page)
Load Span Table (1 Page)

Report No. C3047-5
Date: 9.3.2026

BALA SOCKALINGAM
LICENSE
No. 62240
STATE OF
FLORIDA
PROFESSIONAL ENGINEER

This item has been digitally signed and sealed by Bala Sockalingam, PE, on the date indicated.

Printed copies of this document are not considered signed and sealed and this signature must be verified on any electronic copies.

2026.09.03
09:26:44
+08'00'

Manufacturer:	Graber Post Buildings, Inc.
Product Name:	R Panel
Panel Description:	36" wide coverage with (4) 1.25" high ribs
Materials:	Min 26 ga., 80 ksi steel Galvanized coated steel (ASTM A653) or Galvalume coated steel (ASTM A792) or painted steel (ASTM A755) as per FBC 2026 Section 1405.2.
Support Description:	Nom. 2" x 2" (min) SPF lumber. Must be designed by others.
Design Pressure:	±40 psf at support spacing of 60" o.c. (at 3 span condition)
Panel Attachment:	#10-16 x 1-1/2" long wood screw with washer. Corrosion resistant as per FBC 2026 Section 1405.17. For installation in areas within 3000 ft. of a saltwater coastline, fasteners are corrosion resistant as per FBC 2026 Section 1711.
At interior supports	at 12" o.c. across panel width
At panel ends	at 12" o.c. across panel width
Sidelap Attachment:	¼"-14 x 7/8" long self-drilling screws at 24" o.c. Corrosion resistant as per FBC 2026 Section 1405.17. For installation in areas within 3000 ft. of a saltwater coastline, fasteners are corrosion resistant as per FBC 2026 Section 1711.
Test Standards:	Wall assembly tested in accordance with ASTM E330-02 'Standard Test Method for Structural Performance of Exterior Windows, Doors, Skylights and Curtain Walls by Uniform Static Air Pressure Difference.'
Test Equivalency:	The test procedures in ASTM E330-02 comply with test procedures prescribed in ASTM E330-14.
Code Compliance:	The product described herein has demonstrated compliance with FBC 2026 Section 1404.5.
Product Limitations:	Design wind loads shall be determined for each project in accordance with FBC 2026 Section 1609 or ASCE 7-22 using allowable stress design. The maximum support spacing listed herein shall not be exceeded. The design pressure for reduced support spacing may be computed using rational analysis prepared by a Florida Professional Engineer or based on Graber Post's load span table. This product is not approved for use in the High Velocity Hurricane Zone.
Supporting Documents:	ASTM E330 Test Report ENCON Technology Inc. C1503-3, Reporting Date 3/16/2007

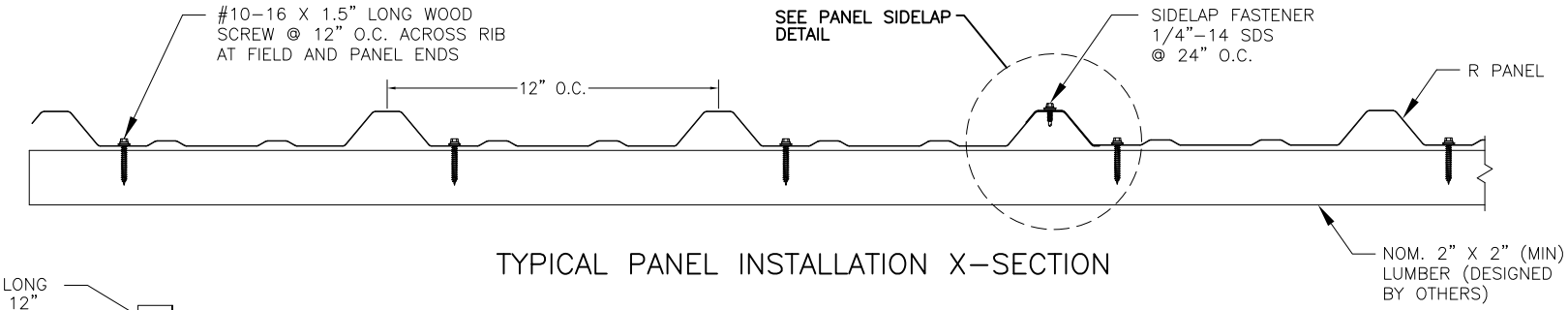

TYPICAL PANEL INSTALLATION X–SECTION

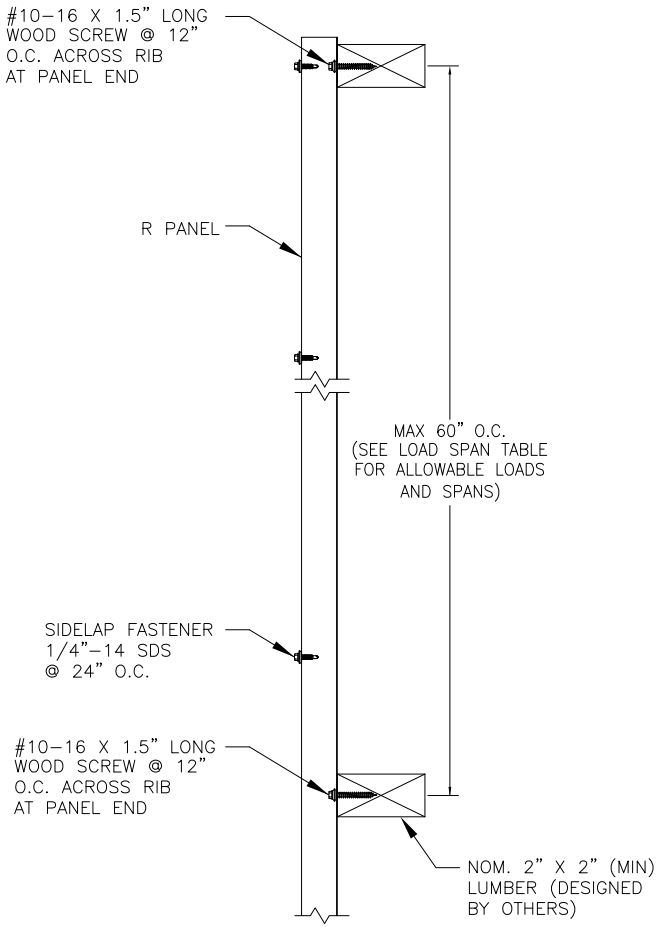

SECTION VIEW

GENERAL NOTES:

1. WALL PANEL HAS BEEN DESIGNED IN ACCORDANCE WITH THE FLORIDA BUILDING CODE (FBC).
2. WALL PANELS SHALL BE 26 GA. (t = 0.017"). EFFECTIVE COVERING WIDTH OF PANEL = 36".
3. THE WALL PANELS SHALL BE INSTALLED OVER STRUCTURE AS SPECIFIED ON THIS DRAWING.
4. REQUIRED DESIGN WIND LOADS SHALL BE DETERMINED FOR EACH PROJECT. THIS PANEL SYSTEM MAY NOT BE INSTALLED WHEN THE REQUIRED DESIGN WIND LOADS ARE GREATER THAN THE ALLOWABLE DESIGN LOADS.
5. ALL FASTENERS MUST BE IN ACCORDANCE WITH THIS DRAWING & THE FLORIDA BUILDING CODE. IF A DIFFERENCE OCCURS BETWEEN THE MINIMUM REQUIREMENTS OF THIS DRAWING & THE CODE, THE CODE SHALL CONTROL.
6. SUPPORTS MUST BE DESIGNED TO WITHSTAND WIND LOADS AS REQUIRED REQUIRED FOR EACH APPLICATION AND ARE THE RESPONSIBILITY OF OTHERS.

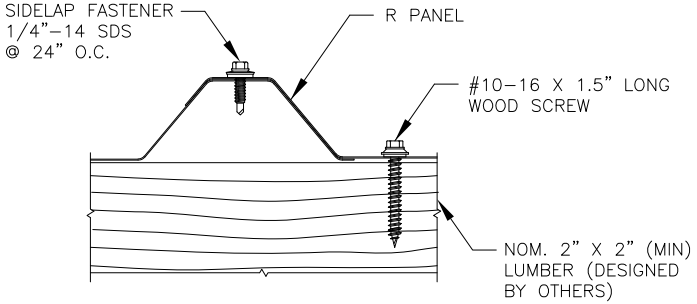

PANEL SIDELAP

DRAWN BY: B.S.	CHECKED BY:
PLOT:	DATE: 12/7/11

NO.	REVISION DESCRIPTION	BY	DATE

DRAWING TITLE: R WALL PANEL SYSTEM

MANUFACTURER: GRABER POST BUILDINGS, INC.
7716 N 900 E
MONTGOMERY, IN 47558
800 264–5013

CONSULTANT: BALA SOCKALINGAM, PH.D., P.E.
1216 N LANSING AVE, SUITE C
TULSA, OK 74106
PHONE: 918–492–5992

DRAWING NO. 3047–5 | REV.

SHEET NO. 1 OF 1

GRABER POST BUILDINGS, INC.
R WALL PANEL
36" wide, 26 ga. (min) Steel Panel

Span Condition	Loading Type	Allowable Load (psf)								
		Support Spacing (ft)								
		1.00	**1.50**	**2.00**	**2.50**	**3.00**	**3.50**	**4.00**	**4.50**	**5.00**
Two Span	Positive or Negative	176.0	117.3	88.0	70.4	58.7	50.3	44.0	39.1	32.0
Three Span	Positive or Negative	200.0	133.3	100.0	80.0	66.7	57.1	50.0	44.4	40.0
Four or More Spans	Positive or Negative	192.5	128.3	96.2	77.0	64.2	55.0	48.1	42.8	37.4

Notes:

1. Allowable load for each condition is the smallest load calculated based on fastener capacity, panel strength and and deflection limit of L/120. Allowable loads are calculated for minimum 26 ga. panel.
2. The panel allowable properties are determined from full scale ASTM E330 test at 5' 0" span
3. The panel fasteners are Sealtite #10-16 x 1-1/2" long Woodbinder fasteners. Fastener spacing across panel width is 12.0" o.c. in the field and panel ends.
4. Sidelap fasteners are 1/4"-14 x 7/8" long SDS at 24" o.c.
5. Wood supports are minimum 2" x 2" lumber. All supports must be designed to resist all loads imposed on the panel.
6. Panels must be installed as per Evaluation Report FL 8687.3 and Graber Post current installation procedure.

1216 N Lansing Ave., Suite C
Tulsa, Ok 74106
918 492 5992

Bala Sockalingam, Ph.D., P.E.
FL 62240