# Evaluation Report

## 3.5DF-24 DOVETAIL

Roof Deck Panels

**Manufacturer:**

**NUCOR® VULCRAFT (ALABAMA)**

7205 Gault Ave N.

Fort Payne, AL 35967

***for***

**Florida Product Approval**

## # FL 48285.3

**Florida Building Code FBC 8th Edition (2023)**

**Method:** **2-B**

**Category:** **Structural Components**

**Sub - Category:** **Roof Deck**

**Product:** "3.5DF-24 DOVETAIL"

**Product Description:** Dovetail (Flat) Roof Deck

**Material:** Steel

This item has been digitally signed and sealed by James L. Buckner, P.E., on this date below. Printed copies of this document are not considered signed and sealed, and the signature must be verified on any electronic copies.

**Prepared by:**
James L. Buckner, P.E., S.E.C.B.
Florida Professional Engineer # 31242
Florida Evaluation ANE ID: 1916
Project Manager: Diana Galloway
Report No. 26-810-3.5DF-24-SRD-ER
*(New)*
Date: 06/16/2026

JAMES L. BUCKNER
LICENSE
No 31242
STATE OF FLORIDA
PROFESSIONAL ENGINEER

James L. Buckner, P.E.
FL31242

2026.06.18 14:57:49 -04'00'

Contents:

Evaluation Report Pages 1 – 10

**Manufacturer:**

**NUCOR® VULCRAFT (ALABAMA)**
7205 Gault Ave N.
Fort Payne, AL 35967
(256) 845-2460
http://vulcraft.com

**Product Name:** **"3.5DF-24 DOVETAIL"**

**Product Category:** Structural Components

**Product Sub-Category** Roof Deck

**Compliance Method:** State Product Approval Rule 61G20-3.005 (2) (b)

**Product Description:** Dovetail (Flat) Single-fluted, Structural Steel Roof Deck:
"3.5DF-24 DOVETAIL"

**Support:** **Type:**
Steel Supports
(Design of steel support system is outside the scope of this evaluation.)

**Performance:** Wind Resistance:

- Design Uplift Pressure: **- 45 PSF (Max.)**
  (Refer to details herein)

**Performance Standards:** The product described herein has demonstrated compliance with:
**ANSI/SDI RD—2017 Standard for Steel Roof Deck**

**Code Compliance:** The product(s) described herein have demonstrated compliance with the intent and principles of the standards adopted by the:
**Florida Building Code 8th Edition (2023), Section 1708.2**

**Evaluation Report Scope:** This product evaluation is limited to compliance with the structural requirements of the Florida Building Code, as related to the scope section to Florida Product Approval Rule 61G20-3.001.

**Limitations and Conditions of Use:**

- Scope of "Limitations and Conditions of Use" for this evaluation:
  This evaluation report for "Optional Statewide Approval" contains technical documentation, specifications and installation method(s) which include "Limitations and Conditions of Use" throughout the report in accordance with Rule 61G20-3.005. Per Rule 61G20-3.004, the Florida Building Commission is the authority to approve products under "Optional Statewide Approval".
- Option for application outside "Limitations and Conditions of Use"
  Rule 61G20-3.005(1)(e) allows engineering analysis for "project specific approval by the local authorities having jurisdiction in accordance with the alternate methods and materials authorized in the Code". Any modification of the product as evaluated in this report and approved by the Florida Building Commission is outside the scope of this evaluation and will be the responsibility of others.
- This report is a building code product evaluation per FLPE rule (FAC) 61G15-36 to comply with Florida product approval rule (FAC) 61G20-3. This evaluation report is part of the Florida Building Commission approval for the listed code related criteria. This report by James Buckner, P.E. and CBUCK Engineering is not a design certification of code compliance construction submittal documentation, per FBC section 107, for any individual structure, site specific or permit design.
- All metal components and fasteners shall be corrosion resistant in accordance with applicable sections of FBC, including but limited to Sections 1504.3.2, 1506.6 and 1507.4.4.
- Design of support system is outside the scope of this report. Support shall be designed by others and shall comply with the FBC Chapters 22 for steel and Chapter 16 for structural loading.
- Fire Classification is outside the scope of Rule 61G20-3 and is therefore not included in this evaluation.
- This evaluation report does not evaluate the use of this product for use in the High Velocity Hurricane Zone code section. (Dade & Broward Counties)

**Quality Assurance:** The manufacturer has demonstrated compliance of roof panel products in accordance with the Florida Building Code and Rule 61G20-3.0005 (3) for manufacturing under a quality assurance program audited by an approved quality assurance entity **FM Approvals, Norwood, MA** (FBC Organization Number: QUA1860).

**Components/Materials (by Manufacturer):**

**Roof Deck Panel:** **3.5DF-24 DOVETAIL**

| | |
|---|---|
| Material: | Steel |
| Thicknesses: | 16 and 18 gauge per Tables |
| Panel Width: | 24" Max. Coverage |
| Rib Height: | 3-1/2" |
| Yield Strength: | 50 ksi min. |
| Corrosion Resistance: | ASTM A 653<br>In compliance with FBC 2203.2 |
| Material Standard: | AISI S100 in compliance with FBC 2210 |

**Fastener/Attachment Options:**

**Roof Deck to Supports:**

OPTION 1:

| | |
|---|---|
| Type: | Self-tapping sheet metal screws |
| Size : | Site specific design by Design Professional |
| Corrosion Resistance: | Per FBC Section 1506.6 and 1507.4.4 |
| Standard: | Factory Mutual approved |

OPTION 2:

| | |
|---|---|
| Type: | Power-driven fastener |
| Size : | Site specific design by Design Professional |
| Corrosion Resistance: | Per FBC Section 1506.6 and 1507.4.4 |
| Standard: | Factory Mutual approved |

OPTION 3:

| | |
|---|---|
| Type: | Quality welding procedure |
| Size : | Site specific design by Design Professional |
| Corrosion Resistance: | Per FBC Section 1506.6 and 1507.4.4 |
| Standard: | American National Standards Institute/American Welding Society Standard (ANSI/AWS), "Specification for Welding of Sheet Metal" or applicable standard in FBC Section 2214.3(4) |

**Panel to Panel, Side Lap Stitching:**

| | |
|---|---|
| Type: | FM approved side lap fasteners |
| Corrosion Resistance: | Per FBC Section 1506.6 and 1507.4.4 |
| Standard: | Factory Mutual approved |

**Installation:**

**Installation Method:**
(Refer to tables and drawings at the end of this report.)

**Roof Deck to Supports:**
Fastener Attachment to Steel Supports May Be Designed By A Qualified Design Professional As Required By The Florida Building Code For Site Specific Projects.

**OPTION 1 or 2: FM Approved Fasteners**

- Attachment Spacing: As specified in Roofnav assembly, not to exceed max. span for proprietary fastener or spans listed in tables herein.
- Support Spacing: Refer to Table 2.0

**OPTION 3: FM Approved Puddle Weld**

- Puddle Weld Diameter: Refer to Tables 3.0 – 3.5
- Puddle Weld Pattern: Refer to Tables 3.0 – 3.5
  (at support across the width of the panel)
- Support Spacing: Refer to Tables 3.0 – 3.5

**Panel to Panel, Side Lap Stitching:**

- Side laps fastened along the panel laps at support intersections, midspans and supports with approved fasteners
- Spacing: As specified per FM approved sidelap fastener

When fasteners are used, min. penetration thru bottom of supports, 3/4".

Install the NUCOR® VULCRAFT "3.5DF-24 DOVETAIL" roof deck in compliance with the installation method listed in this report and applicable code sections of FBC 8th Edition (2023). The installation method described herein is in accordance with the scope of this evaluation report. Refer to manufacturer's installation instructions as a supplemental guide for attachment.

**Referenced Data:**

1. FM Certification By FM Approvals (FBC Organization #CER ID: 1840)
   FM Approval Link: https://roofnav.fmglobal.com/
   - 3.5DF-24 10-24-24-as.docx
2. FM 4451 Steel Roof Deck Test (PL)
   By Factory Mutual Research Corp. (FBC Organization #TST ID: 1867)
   Report No. PAR469609, Report Date: 12/17/24
3. Quality Assurance
   By FM Approvals, (FBC Organization #QUA ID:1860)
4. Certification of Independence
   By James L. Buckner, P.E. @ CBUCK Engineering
   (FBC Organization # ANE 1916)

# Engineering Properties
# NUCOR® VULCRAFT
# "3.5DF-24 DOVETAIL" Steel Roof Deck Panel

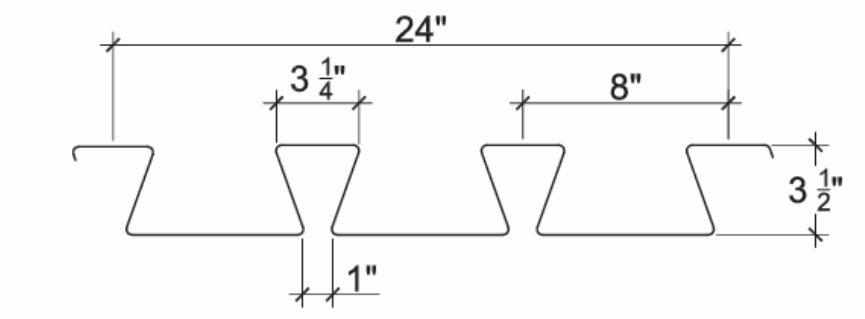


## Typical Panel Profile

**"3.5DF-24" DOVETAIL" Steel Roof Deck Panel**
**SECTION PROPERTIES**

| Deck Gage | Deck Weight $w_{dd}$ (psf) | Base Metal Thickness t (in.) | Yield Strength $F_y$ (ksi) | Effective Moment of Inertia at Service Load $I_d = (2I_e+I_g)/3$ $I_d$+ ($in^4$/ft) | $I_d$- ($in^4$/ft) | Effective Section Modulus at $F_y$ = 50 ksi $S_e$+ ($in^3$/ft) | $S_e$- ($in^3$/ft) | Allowable Moment $M_n$+/Ω (lb-ft/ft) | $M_n$-/Ω (lb-ft/ft) | Vertical Web Shear $V_n$/Ω (lb/ft) |
|---|---|---|---|---|---|---|---|---|---|---|
| **18** | 4.5 | 0.0478 | 50 | 2.688 | 2.496 | 1.055 | 0.935 | 2633 | 2333 | 6813 |
| **16** | 5.6 | 0.0598 | 50 | 3.430 | 3.256 | 1.417 | 1.289 | 3536 | 3217 | 9781 |

**Table 1.0**

Notes:
- ASTM A653 SS GR 50 Min. with G90
- Standard lengths – 6'-0" to 40'-0"
- Tables conform to ANSI/SDI RD-2017

# Installation Method
# NUCOR® VULCRAFT
# "3.5DF-24 DOVETAIL" Steel Roof Deck Panel

| ALLOWABLE LOAD (PSF) FOR NOMINAL SUPPORT SPACING [1,2,3] | | | | |
|---|---|---|---|---|
| ATTACHED WITH FM APPROVED FASTENERS @ 8" O.C. | | | | |
| **GAUGE** | **SPAN CONDITION** | **SUPPORT SPACING (IN.)** | **LOAD CONDITION** | **PSF** |
| 16 | SINGLE | 303 | NEGATIVE | 45 |
| | DOUBLE | 288 | NEGATIVE | 45 |
| | 3 OR MORE | 322 | NEGATIVE | 45 |
| 18 | SINGLE | 234 | NEGATIVE | 45 |
| | DOUBLE | 249 | NEGATIVE | 45 |
| | 3 OR MORE | 278 | NEGATIVE | 45 |

**Table 2.0**

| ALLOWABLE LOAD (PSF) FOR NOMINAL SUPPORT SPACING [1,2,3.4] | | | | |
|---|---|---|---|---|
| ATTACHED WITH PUDDLE WELDS @ 8" O.C. | | | | |
| **WELD DIAMETER (IN.)** | 0.625 | **WELD PATTERN** | | 24/3 |
| **GAUGE** | **SPAN CONDITION** | **SUPPORT SPACING (IN.)** | **LOAD CONDITION** | **PSF** |
| 16 | SINGLE | 303 | NEGATIVE | 45 |
| | DOUBLE | 198 | NEGATIVE | 45 |
| | 3 OR MORE | 248 | NEGATIVE | 45 |
| 18 | SINGLE | 234 | NEGATIVE | 45 |
| | DOUBLE | 162 | NEGATIVE | 45 |
| | 3 OR MORE | 202 | NEGATIVE | 45 |

**Table 3.0**

| ALLOWABLE LOAD (PSF) FOR NOMINAL SUPPORT SPACING [1,2,3.4] | | | | |
|---|---|---|---|---|
| ATTACHED WITH PUDDLE WELDS @ 8" O.C. | | | | |
| **WELD DIAMETER (IN.)** | 0.625 | **WELD PATTERN** | | 24/6 |
| **GAUGE** | **SPAN CONDITION** | **SUPPORT SPACING (IN.)** | **LOAD CONDITION** | **PSF** |
| 16 | SINGLE | 303 | NEGATIVE | 45 |
| | DOUBLE | 288 | NEGATIVE | 45 |
| | 3 OR MORE | 322 | NEGATIVE | 45 |
| 18 | SINGLE | 234 | NEGATIVE | 45 |
| | DOUBLE | 249 | NEGATIVE | 45 |
| | 3 OR MORE | 278 | NEGATIVE | 45 |

**Table 3.1**

# Installation Method
# NUCOR® VULCRAFT
# "3.5DF-24 DOVETAIL" Steel Roof Deck Panel

| ALLOWABLE LOAD (PSF) FOR NOMINAL SUPPORT SPACING [1,2,3.4] | | | | |
|---|---|---|---|---|
| ATTACHED WITH PUDDLE WELDS @ 8" O.C. | | | | |
| WELD DIAMETER (IN.) | 0.750 | WELD PATTERN | | 24/3 |
| GAUGE | SPAN CONDITION | SUPPORT SPACING (IN.) | LOAD CONDITION | PSF |
| 16 | SINGLE | 303 | NEGATIVE | 45 |
| | DOUBLE | 242 | NEGATIVE | 45 |
| | 3 OR MORE | 303 | NEGATIVE | 45 |
| 18 | SINGLE | 234 | NEGATIVE | 45 |
| | DOUBLE | 197 | NEGATIVE | 45 |
| | 3 OR MORE | 246 | NEGATIVE | 45 |

**Table 3.2**

| ALLOWABLE LOAD (PSF) FOR NOMINAL SUPPORT SPACING [1,2,3.4] | | | | |
|---|---|---|---|---|
| ATTACHED WITH PUDDLE WELDS @ 8" O.C. | | | | |
| WELD DIAMETER (IN.) | 0.875 | WELD PATTERN | | 24/6 |
| GAUGE | SPAN CONDITION | SUPPORT SPACING (IN.) | LOAD CONDITION | PSF |
| 16 | SINGLE | 303 | NEGATIVE | 45 |
| | DOUBLE | 288 | NEGATIVE | 45 |
| | 3 OR MORE | 322 | NEGATIVE | 45 |
| 18 | SINGLE | 234 | NEGATIVE | 45 |
| | DOUBLE | 249 | NEGATIVE | 45 |
| | 3 OR MORE | 278 | NEGATIVE | 45 |

**Table 3.3**

| ALLOWABLE LOAD (PSF) FOR NOMINAL SUPPORT SPACING [1,2,3.4] | | | | |
|---|---|---|---|---|
| ATTACHED WITH PUDDLE WELDS @ 8" O.C. | | | | |
| WELD DIAMETER (IN.) | 0.875 | WELD PATTERN | | 24/3 |
| GAUGE | SPAN CONDITION | SUPPORT SPACING (IN.) | LOAD CONDITION | PSF |
| 16 | SINGLE | 303 | NEGATIVE | 45 |
| | DOUBLE | 271 | NEGATIVE | 45 |
| | 3 OR MORE | 322 | NEGATIVE | 45 |
| 18 | SINGLE | 234 | NEGATIVE | 45 |
| | DOUBLE | 232 | NEGATIVE | 45 |
| | 3 OR MORE | 278 | NEGATIVE | 45 |

**Table 3.4**

# Installation Method
# NUCOR® VULCRAFT
# "3.5DF-24 DOVETAIL" Steel Roof Deck Panel

| ALLOWABLE LOAD (PSF) FOR NOMINAL SUPPORT SPACING [1,2,3.4] | | | | |
|---|---|---|---|---|
| ATTACHED WITH PUDDLE WELDS @ 8" O.C. | | | | |
| WELD DIAMETER (IN.) | 0.875 | | WELD PATTERN | 24/6 |
| GAUGE | SPAN CONDITION | SUPPORT SPACING (IN.) | LOAD CONDITION | PSF |
| 16 | SINGLE | 303 | NEGATIVE | 45 |
| | DOUBLE | 288 | NEGATIVE | 45 |
| | 3 OR MORE | 322 | NEGATIVE | 45 |
| 18 | SINGLE | 234 | NEGATIVE | 45 |
| | DOUBLE | 249 | NEGATIVE | 45 |
| | 3 OR MORE | 278 | NEGATIVE | 45 |

**Table 3.5**

**Notes for Tables 2.0 – 3.5:**

[1]Allowable negative load based on FM Class 1-90

[2]Values do not include a 1/3 stress increase

[3]Diaphragm and axial load capacity is outside the scope of this evaluation.

[4]Weld Electrode, MPa 414, 60,000 psi

# Installation Method
# NUCOR® VULCRAFT
# "3.5DF-24 DOVETAIL" Steel Roof Deck Panel

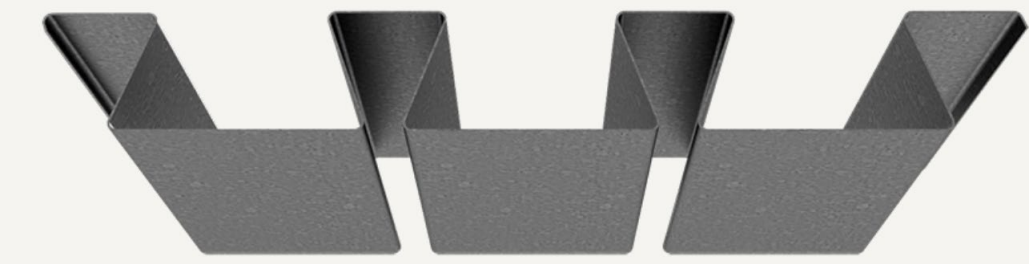

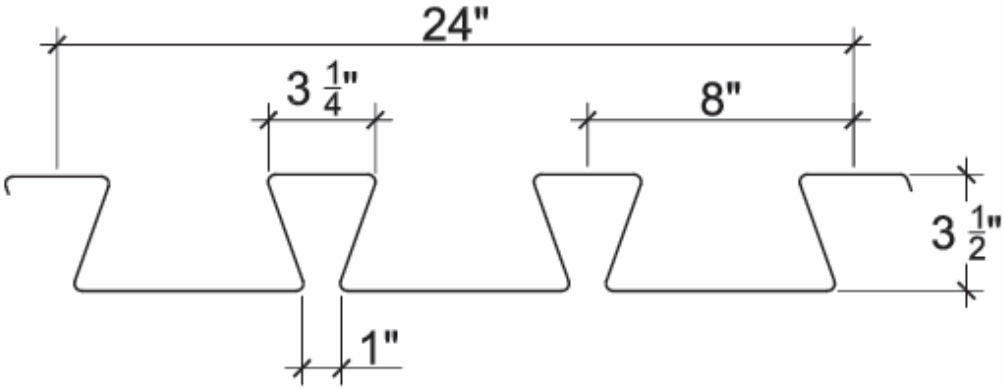


**Typical Panel Profile**

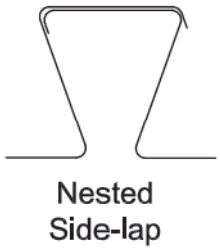


**Sidelap Detail**