Listing and Technical Evaluation Report™

A Duly Authenticated Report from an Approved Agency

Report No: 1308-05

Issue Date: February 19, 2014

Revision Date: March 26, 2025

Subject to Renewal: April 1, 2027

Use of TimberLOK® Fasteners to Provide Top Plate Roll Resistance to Trusses and Rafters Attached to the Tops of Walls

Trade Secret Report Holder:

OMG®, Inc. dba FastenMaster®

Phone: 800-518-3569 Website: www.fastenmaster.com Email: mguthrie@omginc.com

CSI Designations:

DIVISION: 06 00 00 - WOOD, PLASTICS AND COMPOSITES Section: 06 00 90 - Wood and Plastic Fastenings

Kirk Grundahl

Digitally signed by Kirk Grundahl
DN: C=US, E=kgrundahl@qualtim.com, O=Qualtim, CN=Kirk Grundahl
Date: 2025.03.26 10:12:37-05'00'

KIRK H. GRUNDAHL LICENSE No. 73618 STATE OF FLORIDA PROFESSIONAL ENGINEER

March 26, 2025

1 Innovative Product Evaluated[1]

1.1 FastenMaster TimberLOK Heavy Duty Wood Screws

2 Product Description and Materials

2.1 The innovative product evaluated in this report is shown in **Figure 1**.

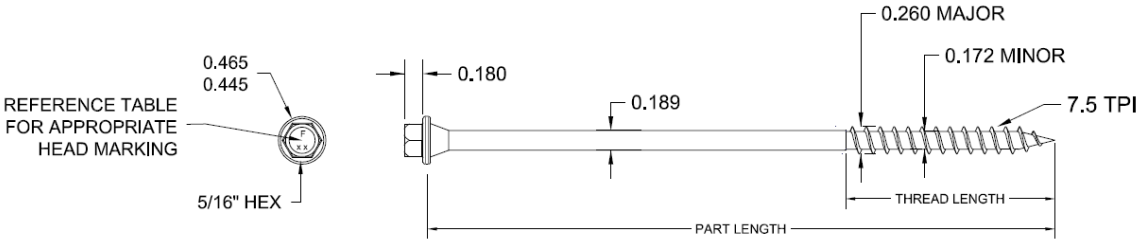

Figure 1. TimberLOK Fastener

2.2 TimberLOK Fasteners are manufactured using a standard cold-formed process, followed by a heat-treating process from 1022 carbon steel or 10B21 wire conforming to ASTM A510, with a minimum ultimate tensile strength of 60-ksi.

2.3 The specifications of the fasteners evaluated in this report are designated in **Table 1**.

Confidential Intellectual Property Is protected by Defend Trade Secrets Act 2016, ©DrJ Engineering, LLC

Table 1. Fastener Specifications for Evaluated TimberLOK Fasteners

Product Name	Fastener Designation[1]	Head Marking	Dimension (in)					Bending Yield Strength,[4] F_{yb} (psi)	Allowable Fastener Strength (lb)	
			Fastener Length[2]	Thread Length[3]	Shank Diameter	Minor Diameter	Major Diameter		Tensile	Shear[5]
TimberLOK 4"	TLOK04	F4.0	4.0	2.0	0.189	0.172	0.260	190,600	1,300	940
TimberLOK 6"	TLOK06	F6.0	6.0							

SI: 1 in = 25.4 mm
Fastener designations are found on the product packaging. Individual fasteners may be marked according to this table.
Fastener length is measured from the bottom-side of the head to the tip.
Thread length includes the tapered tip.
Bending yield strength determined in accordance with ASTM F1575 and based the minor diameter.
Allowable shear strength values apply to the unthreaded shank portion of the fastener.

2.4 *Corrosion Resistance*

2.4.1 TimberLOK Fasteners have a proprietary coating, which may be used as an alternative to the protection provided by code-approved hot-dipped galvanized coatings meeting ASTM A153, Class D (IBC Section 2304.10.6[2] and IRC Section R317.3).

2.4.1.1 TimberLOK Fasteners may be used where screws are required to exhibit corrosion resistance when exposed to adverse environmental conditions, which are subject to the limitations of this report. TimberLOK Fasteners have been evaluated for use in wood treated with waterborne Alkaline Copper Quaternary type D (ACQ-D) preservatives with a retention of 0.40-pcf (6.4 kg/m^3).

2.5 *Pressure-Preservative Treated (PPT) Wood Applications*

2.5.1 TimberLOK Fasteners having the proprietary coating are recognized for use in PPT lumber provided the conditions set forth by the PPT lumber manufacturer be met, including appropriate strength reductions.

2.6 *Fire-Retardant Treated (FRT) Wood Applications*

2.6.1 TimberLOK Fasteners having the proprietary coating are recognized for use in FRT lumber provided the conditions set forth by the FRT lumber manufacturer be met, including appropriate strength reductions.

2.7 TimberLOK Fasteners are approved for use in interior applications.

2.8 As needed, review material properties for design in **Section 6** and the regulatory evaluation in **Section 8**.

3 Definitions

3.1 New Materials[3] are defined as building materials, equipment, appliances, systems, or methods of construction not provided for by prescriptive and/or legislatively adopted regulations, known as alternative materials.[4] The design strengths and permissible stresses shall be established by tests[5] and/or engineering analysis.[6]

3.2 Duly authenticated reports[7] and research reports[8] are test reports and related engineering evaluations, which are written by an approved agency[9] and/or an approved source.[10]

3.2.1 These reports contain intellectual property and/or trade secrets, which are protected by the Defend Trade Secrets Act (DTSA).[11]

3.3 An approved agency is *"approved"* when it is ANAB ISO/IEC 17065 accredited. DrJ Engineering, LLC (DrJ) is listed in the ANAB directory.

3.4 An approved source is *"approved"* when a professional engineer (i.e., Registered Design Professional) is properly licensed to transact engineering commerce. The regulatory authority governing approved sources is the state legislature via its professional engineering regulations.[12]

Confidential Intellectual Property Is protected by Defend Trade Secrets Act 2016, ©DrJ Engineering, LLC

3.5 Testing and/or inspections conducted for this duly authenticated report were performed by an ISO/IEC 17025 accredited testing laboratory, an ISO/IEC 17020 accredited inspection body, and/or a licensed Registered Design Professional (RDP).

3.5.1 The Center for Building Innovation (CBI) is ANAB[13] ISO/IEC 17025 and ISO/IEC 17020 accredited.

3.6 The regulatory authority shall enforce[14] the specific provisions of each legislatively adopted regulation. If there is a non-conformance, the specific regulatory section and language of the non-conformance shall be provided in writing[15] stating the nonconformance and the path to its cure.

3.7 The regulatory authority shall accept duly authenticated reports from an approved agency and/or an approved source with respect to the quality and manner of use of new materials or assemblies as provided for in regulations regarding the use of alternative materials, designs, or methods of construction.[16]

3.8 ANAB is an International Accreditation Forum (IAF) Multilateral Recognition Arrangement (MLA) signatory where recognition of certificates, validation and verification statements issued by conformity assessment bodies accredited by all other signatories of the IAF MLA with the appropriate scope, shall be approved.[17] Therefore, all ANAB ISO/IEC 17065 duly authenticated reports are approval equivalent.[18]

3.9 Approval equity is a fundamental commercial and legal principle.[19]

4 Applicable Standards for the Listing; Regulations for the Regulatory Evaluation[20]

4.1 *Standards*

4.1.1 *ANSI/AWC NDS: National Design Specification (NDS) for Wood Construction*

4.1.2 *ANSI/AWC SDPWS: Special Design Provisions for Wind and Seismic*

4.1.3 *ASTM A153: Standard Specification for Zinc Coating (Hot-Dip) on Iron and Steel Hardware*

4.1.4 *ASTM A510: Standard Specification for General Requirements for Wire Rods and Coarse Round Wire, Carbon Steel, and Alloy Steel*

4.1.5 *ASTM B117: Standard Practice for Operating Salt Spray (Fog) Apparatus*

4.1.6 *ICC 600: Standard for Residential Construction in High-wind Regions*

4.2 *Regulations*

4.2.1 *IBC – 15, 18, 21: International Building Code®*

4.2.2 *IRC – 15, 18, 21: International Residential Code®*

4.2.3 *FBC-B—20, 23: Florida Building Code – Building[21] FL47410*

4.2.4 *FBC-R—20, 23: Florida Building Code – Residential[21] FL47410*

5 Listed[22]

5.1 Equipment, materials, products, or services included in a List published by a nationally recognized testing laboratory (i.e., CBI), approved agency (i.e., CBI and DrJ), and/or approved source (i.e., DrJ), or other organization concerned with product evaluation (i.e., DrJ) that maintains periodic inspection (i.e., CBI) of production of listed equipment or materials, and whose listing states either that the equipment or material meets nationally recognized standards or has been tested and found suitable for use in a specified manner.

6 Tabulated Properties Generated from Nationally Recognized Standards

6.1 *Code Requirements*

6.1.1 Neither the IBC nor the IRC contain requirements that specifically address the potential for Top Plate Roll (TPR) due to an eccentric load path.

6.1.2 There are no code-defined deflection requirements for deformations caused by uplift.

Confidential Intellectual Property Is protected by Defend Trade Secrets Act 2016, ©DrJ Engineering, LLC

6.1.3 The design for uplift is an Allowable Stress Design (ASD) load consideration. Uplift loads must be resisted by the fastening system used.

6.1.4 *IRC Requirements:*

6.1.4.1 IRC Table R602.3(1) requirements are shown in **Table 2**.

Table 2. Excerpt from IRC Table R602.3(1) Fastener Schedule for Structural Members

Item	Description of Building Elements	Number and Types of Fastener	Spacing of Fasteners
6	Rafter or roof truss to plate, toe nail	3-16d box nails (3½" × 0.135") or 3-10d common nails (3" × 0.148") or 4-10d box (3" x 0.128") or 4-3" x 0.131" nails	2 toenails on one side and 1 toenail on opposite side of each rafter or truss[1]

SI: 1 in = 25.4 mm

1. Where a rafter is fastened to an adjacent parallel ceiling joist in accordance with this schedule, provide two toenails on one side of the rafter and toenails from the ceiling joist to top plate in accordance with this schedule. The toenail on the opposite side of the rafter shall not be required.

6.1.4.2 IRC Section R802.11 discusses the roof to wall uplift resistance in terms of resistance to load with no deflection criteria: *"Where the uplift force does not exceed 200 pounds, rafters and trusses spaced not more than 24 inches (610 mm) on center shall be permitted to be attached to their supporting wall assemblies in accordance with IRC Table R602.3(1)."*

6.1.4.3 IRC Section R802.11.1[23] addresses truss to top plate connections for trusses: *"Trusses shall be attached to supporting wall assemblies by connections capable of resisting uplift forces as specified on the truss design drawings. Uplift forces shall be permitted to be determined as specified by Table R802.11, if applicable, or as determined by accepted engineering practice."*

6.1.4.4 IRC Section R802.11.2[24] addresses the connection for rafters: *"Individual rafters shall be attached to supporting wall assemblies by connections capable of resisting uplift forces as determined by Table R802.11 or as determined by accepted engineering practice. Connections for beams used in a roof system shall be designed in accordance with accepted engineering practice."*

6.1.5 *IBC Requirements:*

6.1.5.1 IBC Section 1604.8.1 contains the following requirements: *"Anchorage of the roof to walls and columns, and of walls and columns to foundations, shall be provided to resist the uplift and sliding forces that result from the application of the prescribed loads."*

6.1.5.2 IBC Section 2308.7.5 contains the following requirements: *"The roof construction shall have rafter and truss ties to the wall below. Resultant uplift loads shall be transferred to the foundation using a continuous load path. The rafter or truss to wall connection shall comply with IBC Table 2304.10.2 and IBC Table 2308.7.5."*

6.1.5.3 IBC Table 2304.10.2 requirements are shown in **Table 3**.

Confidential Intellectual Property Is protected by Defend Trade Secrets Act 2016, ©DrJ Engineering, LLC

Table 3. Excerpt from IBC Table 2304.10.2 Fastener Schedule for Structural Members

Item	Description of Building Elements	Number and Types of Fastener	Spacing of Fasteners
6	Rafter or roof truss to top plate	3-10 common (3" × 0.148"); or 3-16d box (3½" × 0.135"); or 4-10d box (3" × 0.128"); or 4-3" × 0.131 nails; or 4-3" 14-gauge staples, 7/16" crown	2 toenails on one side and 1 toenail on opposite side of rafter or truss[1]

SI: 1 in = 25.4 mm

1. Where a rafter is fastened to an adjacent parallel ceiling joist in accordance with this schedule and the ceiling joist is fastened to the top plate in accordance with this schedule, the number of toenails in the rafter shall be permitted to be reduced by one nail.

6.1.5.4 There are a number of other requirements in the IBC addressing specific conditions, all of which only address the resistance to applied load. There is no mention of deformation requirements.

6.1.6 There are two standards referenced by the IRC and IBC that contain provisions that could prescriptively address the potential for TPR.

6.1.6.1 ICC 600 Section 504.1 states, *"...Connectors resisting uplift of the roof framing shall be fastened to the top plate on the same side of the wall as the top plate to wall uplift connection."*

6.1.6.2 SDPWS Section 4.4.1.5 states that, when using wood structural panels for top plate to stud uplift resistance, *"Roof or upper level uplift connectors shall be on the same side of the wall as the sheathing unless other methods are used to prevent twisting of the top plate due to eccentric loading."*

6.2 *Testing, Evaluation, and Design Values*

6.2.1 The test assembly construction is shown in **Figure 2** and consisted of the following:

6.2.1.1 Double 2 x 4 top plates and trusses constructed from Spruce-Pine-Fir (SPF) No. 2.

6.2.1.2 Half-inch (½") gypsum wallboard installed on the interior side of the wall using #6 x 1¼" drywall screws. Fasteners along the top edge of the drywall were installed into the lower top plate at 7" o.c.

6.2.1.3 Wood Structural Panel (WSP) sheathing was installed on the exterior wall in accordance with the code.

Figure 2. Wall Construction Test Setup

Confidential Intellectual Property Is protected by Defend Trade Secrets Act 2016, ©DrJ Engineering, LLC

6.2.2 Three fasteners were tested, and their performance was compared as follows:

6.2.2.1 TimberLOK TLOK06 fasteners installed at a 22.5° angle from vertical, beginning $^1/_2$" from the inside edge of the lower top plate and driven up through both plates and into the truss.

6.2.2.2 Simpson SDWC15600-KT fasteners installed at a 22.5° angle from vertical, beginning $^1/_2$" from the inside edge of the lower top plate and driven up through both plates and into the truss.

6.2.2.3 Simpson H2.5A connectors applied to the exterior side of the wall, over the Oriented Strand Board (OSB), per the manufacturer installation instructions.

6.2.2.4 Simpson H2.5A connectors applied to the interior side of the wall, under the gypsum wallboard, per the manufacturer installation instructions.

6.2.3 The published allowable design loads for the TimberLOK Fasteners are shown in **Table 4**.

Table 4. TimberLOK Fasteners Allowable Loads for Uplift and Lateral Resistance

Fastener Designation	Minimum Penetration[1] (in)	Species Group (Specific Gravity)[2,4]	Uplift[3] (lb)			Lateral (lb)					
						F1 – Parallel to Wall			F2[3] – Perpendicular to Wall		
			1.0[5]	1.33	1.60	1.0[5]	1.33	1.60	1.0[5]	1.33	1.60
TimberLOK TLOK04 or TLOK06	2	Southern Pine (0.55)	390	520	620	255	340	410	280	375	450
		Douglas Fir-Larch (0.50)	340	450	540	240	320	385	265	350	425
		Spruce-Pine-Fir/Hem-Fir (0.42)	260	350	420	210	280	340	230	305	370

SI: 1 in = 25.4 mm, 1 lb/ft = 0.0146 kN/m

1. Penetration is into truss/rafter/wood structural support. Wood truss and rafter members shall be a minimum of 2" nominal thickness. Design of truss and rafter members by others.

Equivalent specific gravity of Structural Composite Lumber (SCL) shall be equal to or greater than the specific gravities provided in this table. Refer to product information from SCL manufacturer.

Uplift and F2 lateral load values have been adjusted using Hankinson's equation per NDS.

For applications involving members with different specific gravities, use the allowable load corresponding to the lowest specific gravity.

Allowable uplift and lateral loads for applications in which the controlling load duration (Cd) is two months (i.e., 115%) or seven days (i.e., 125%), may be obtained by multiplying the corresponding tabular value in the column marked *"1.0"* by 1.33 or 1.60, respectively.

6.2.4 Where it is anticipated that loads will be applied to a single fastener simultaneously in more than one direction, additional evaluation is required to account for the combined effect of these loads using accepted engineering practice. Consult a professional engineer as needed for complex design conditions.

6.2.5 The following conditions were monitored throughout the tests:

6.2.5.1 Constant measurement and recording of load vs. displacement.

6.2.5.2 Separation measured between the stud and top plate at both the interior (B) and exterior (A) faces of the wall (see **Figure 3**).

6.2.5.3 Separation measured between the truss and top plate at the interior (D) and exterior (C) faces of the wall (see **Figure 3**).

6.2.5.4 Ultimate load at failure.

Confidential Intellectual Property Is protected by Defend Trade Secrets Act 2016, ©DrJ Engineering, LLC

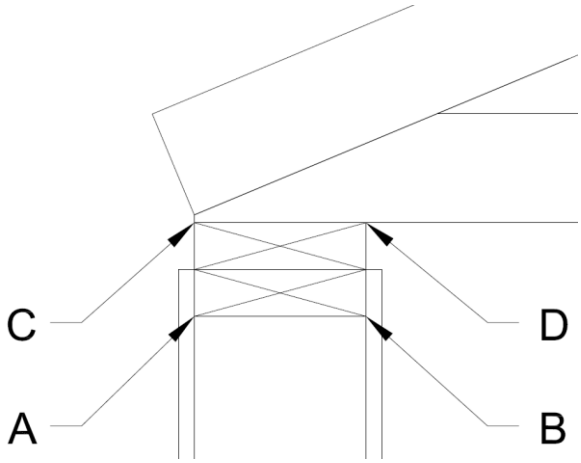

Figure 3. Locations of Deformation Measurements

6.3 *TPR Results*

6.3.1 *Definition of Significant TPR:*

6.3.1.1 $^{1}/_{8}$" (0.125") deformation at exterior joints (A and C) – the gap at which exterior materials assumed to cause potential serviceability issues.

6.3.1.2 $^{1}/_{32}$" (0.031") at interior joints (B and D) – the gap at which drywall or drywall joints assumed to start cracking.

6.3.2 Ultimate loads for each fastener type correlated to their respective published design loads.

6.3.3 The TimberLOK Fasteners experienced no significant TPR at allowable design loads, as shown in **Table 5**.

6.3.4 The Simpson H2.5A connectors experienced significant TPR at their respective design loads, when defined per this section, due to the higher eccentricity of the connection (see **Table 5**).

Table 5. TPR Results[1]

Connector	Installation Location	Design Load (lb)	Deflection/Separation[2] at 450 lb (in)			
			Plate to Stud		Truss to Plate	
			Exterior (A)	Interior (B)	Exterior (C)	Interior (D)
H2.5A	Exterior	480	0.007	0.002	0.098	0.111
	Interior	480	0.005	0.014	0.043	0.035
TimberLOK	Interior	420	0.011	0.008	0.004	0.013
Serviceability Limit			0.125	0.031	0.125	0.031

SI: 1 in = 25.4mm, 1 lb = 0.45 kg

1. Cells highlighted in light green indicate deflection/separation exceeding the serviceability limit (defined as significant TPR per **Section 6.3.1**).

For deflection/separation locations, see **Figure 3**.

6.4 TimberLOK fasteners are permitted for use in buildings and structures located within High-Velocity Hurricane Zone (HVHZ) regions provided that the fasteners are not exposed to the outdoor environment.

Confidential Intellectual Property Is protected by Defend Trade Secrets Act 2016, ©DrJ Engineering, LLC

6.5 Where the application falls outside of the performance evaluation, conditions of use, and/or installation requirements set forth herein, alternative techniques shall be permitted in accordance with accepted engineering practice and experience. This includes but is not limited to the following areas of engineering: mechanics or materials, structural, building science, and fire science.

7 Certified Performance[25]

7.1 All construction methods shall conform to accepted engineering practices to ensure durable, livable, and safe construction and shall demonstrate acceptable workmanship reflecting journeyman quality of work of the various trades.[26]

7.2 The strength and rigidity of the component parts and/or the integrated structure shall be determined by engineering analysis or by suitable load tests to simulate the actual loads and conditions of application that occur.[27]

8 Regulatory Evaluation and Accepted Engineering Practice

8.1 TimberLOK Fasteners comply with the following legislatively adopted regulations and/or accepted engineering practice for the following reasons:

8.1.1 TimberLOK Fasteners used in truss to top plate connections were evaluated to specifically assess the effect of TPR, as shown in **Figure 4**.

8.1.1.1 TPR is defined as the turning or *"rolling"* of the top plate of a wall assembly in relation to the truss assembly above and/or off-the-wall assembly below.

8.1.1.2 TPR is caused by eccentric load path connections (i.e., the connections of the truss to top plate and the top plate to stud are not directly lined up vertically).

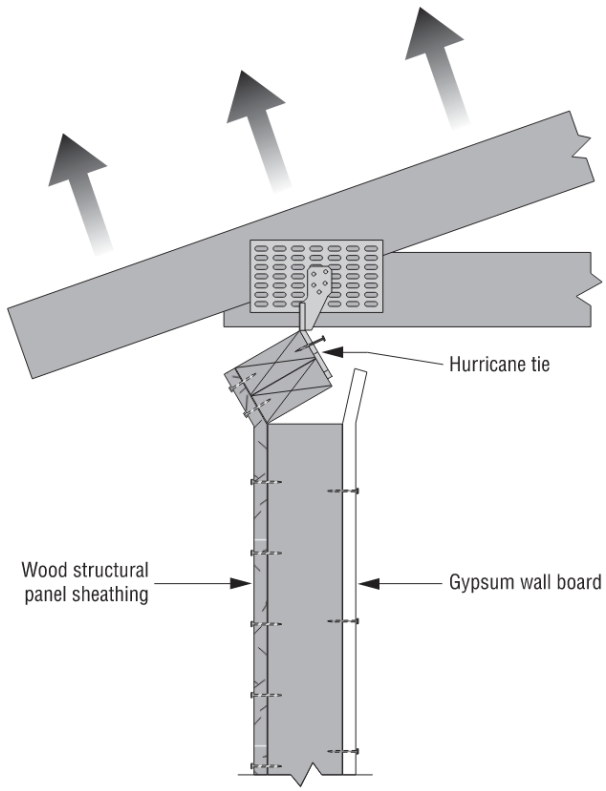

Figure 4. Top Plate Roll (TPR) Illustration

Confidential Intellectual Property Is protected by Defend Trade Secrets Act 2016, ©DrJ Engineering, LLC

8.1.2 The TPR condition is assessed with respect to existing building code requirements.

8.1.3 Corrosion resistance in accordance with ASTM B117 (modified with freshwater instead of saltwater exposure) for use as an alternative to fasteners and connectors prescribed in IBC Section 2304.10.6[28] and IRC Section R317.3.

8.2 For general TimberLOK truss to top plate connection design information, see Report Number 1105-02.

8.3 Any building code, regulation and/or accepted engineering evaluations (i.e., research reports, duly authenticated reports, etc.) that are conducted for this Listing were performed by DrJ Engineering, LLC (DrJ), an ISO/IEC 17065 accredited certification body and a professional engineering company operated by RDP/approved sources. DrJ is qualified[29] to practice product and regulatory compliance services within its scope of accreditation and engineering expertise, respectively.

8.4 Engineering evaluations are conducted with DrJ's ANAB accredited ICS code scope of expertise, which are also its areas of professional engineering competence.

8.5 Any regulation specific issues not addressed in this section are outside the scope of this report.

9 Installation

9.1 Installation shall comply with the approved construction documents, the manufacturer installation instructions, this report, and the applicable building code.

9.2 In the event of a conflict between the manufacturer installation instructions and this report, the more restrictive shall govern.

9.3 *Double Top Plate Installation*

9.3.1 *Upward From Below Truss, Rafter, or Structural Composite Lumber (SCL):*

9.3.1.1 Select a TimberLOK Fastener with a length sufficient to fully embed the 2" threaded portion of the fastener into the truss or rafter, see **Table 1**.

9.3.1.2 Use a $^1/_2$" low RPM/high torque drill to drive the fastener head flush with the surface of the wall framing.

9.3.1.3 Install one (1) TimberLOK Fastener upward through the wall top plate(s) or wood structural framing member and into the center of the truss, rafter, or SCL.

9.3.1.3.1 If the truss, rafter, or SCL is located directly over a wall stud or header, insert the TimberLOK Fastener at the joint between the inside top edge of the stud or header and the inside bottom edge of the top plate at an upward angle from vertical of 20° to 30°, as shown in **Figure 5**.

9.3.1.3.2 Ensure that the angle is sufficient to prevent the fastener from protruding out of the truss, rafter, or SCL.

Confidential Intellectual Property Is protected by Defend Trade Secrets Act 2016, ©DrJ Engineering, LLC

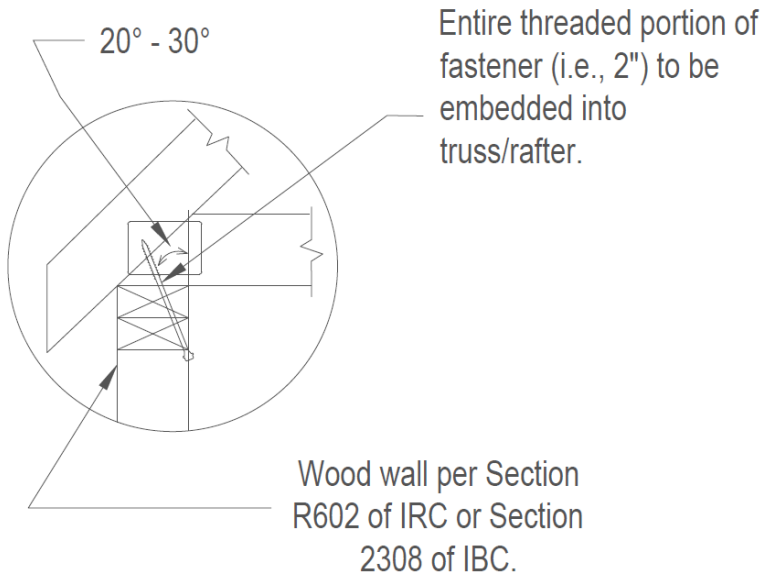

Figure 5. TimberLOK Installation at Wall Stud from Below

9.3.1.3.3 If the truss, rafter, or SCL is located between the wall studs (double top plate application only), insert the fastener near the middle of the bottom face of the bottom top plate(s) straight upward into the truss, rafter or SCL as shown in **Figure 6**.

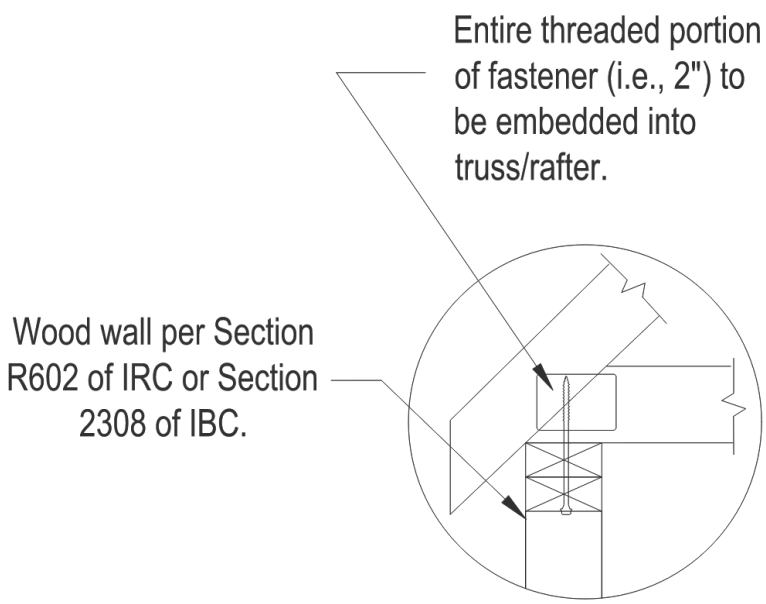

Figure 6. TimberLOK Installation through Double Top Plates at Locations Away From Studs

9.3.1.4 Locate the TimberLOK Fastener in line with the above truss, rafter, or SCL so it penetrates within ±$^{1}/_{4}$" of the centerline of the narrow edge of the truss, rafter, or SCL as shown in **Figure 7**.

Confidential Intellectual Property Is protected by Defend Trade Secrets Act 2016, ©DrJ Engineering, LLC

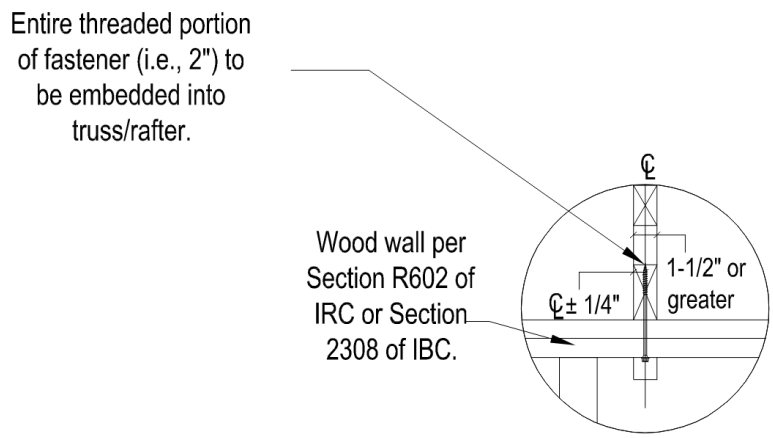

Figure 7. End View of Fastener Connection through Double Top Plate and into Rafter/Truss (Typical)

9.3.2 *Downward From Top of the Truss, Rafter, or SCL:*

9.3.2.1 Select a TimberLOK Fastener with a length sufficient to fully embed the 2" threaded portion of the fastener into the wall top plates or wood structural framing member, see **Table 1**.

9.3.2.2 Use a $^1/_2$" low RPM/high torque drill to drive the fastener head flush with the surface of the wood structural framing member.

9.3.2.3 Install one (1) TimberLOK Fastener at a downward angle from vertical of 20° to 30° through the center of the truss, rafter, or SCL and into the wall top plate(s) or wood structural framing member as shown in **Figure 8**.

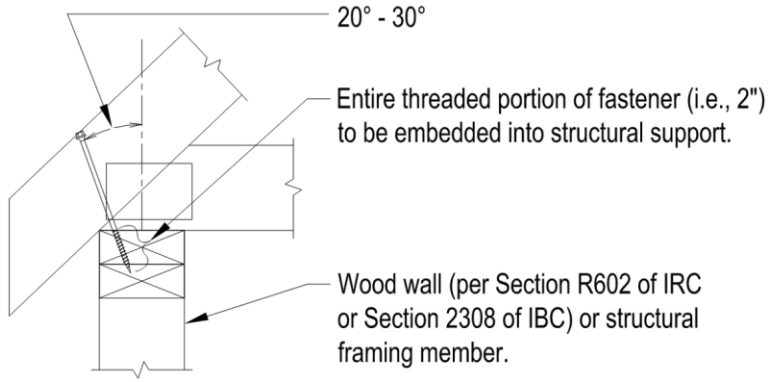

Figure 8. TimberLOK Installation through Wood Trusses, Rafters, or SCL from Above

9.3.2.4 Locate the TimberLOK Fastener so that it penetrates within ±$^1/_4$" of the centerline of the narrow edge of the truss, rafter, or SCL and at or near the center of the wall top plate(s) or wood structural framing member.

9.4 *Single Top Plate Installation*

9.4.1 Select a TimberLOK Fastener with a length sufficient to fully embed the 2" threaded portion of the fastener into the wall top plates or wood structural framing member, see **Table 1**.

9.4.2 Use a $^1/_2$" low RPM/high torque drill to drive the fastener head flush with the surface of the wall framing or wood structural framing member.

Confidential Intellectual Property Is protected by Defend Trade Secrets Act 2016, ©DrJ Engineering, LLC

9.4.3 Where the truss, rafter, or SCL is located directly over a wall stud, insert the fastener at the joint between the inside top edge of the stud and the inside bottom edge of the top plate at an upward angle from vertical of 20° to 30° as shown in **Figure 9**.

9.4.3.1 For minimum truss heel heights (<4$^1/_2$"), use a 4" TimberLOK Fastener to avoid end or top plate top plate penetration.

9.4.3.2 Ensure that the angle is sufficient to prevent the fastener from protruding out of the truss, rafter, or SCL.

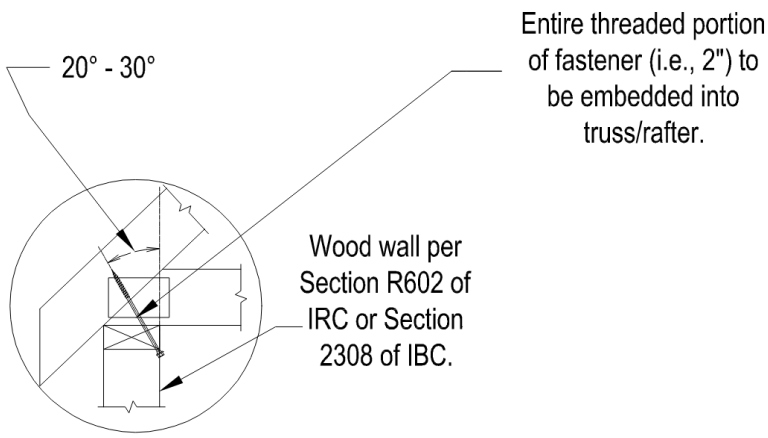

Figure 9. TimberLOK Installation into a Single Top Plate from Below

9.4.4 Where the centerline of the truss, rafter, or SCL is not located directly over the stud, install the fastener vertically up through the top plate and into the truss, rafter or SCL as shown in **Figure 10**.

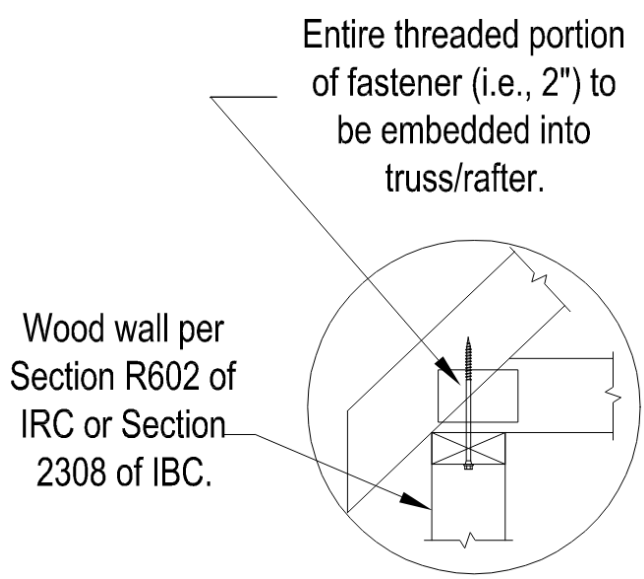

Figure 10. TimberLOK Installation through Single Top Plate at Locations Away From Studs

9.4.5 Locate the fastener so that it penetrates within ±$^1/_4$" of the centerline of the narrow edge of the truss, rafter, or SCL, and at or near the center of the wall top plate(s) or wood structural framing member as shown in **Figure 11**.

Confidential Intellectual Property Is protected by Defend Trade Secrets Act 2016, ©DrJ Engineering, LLC

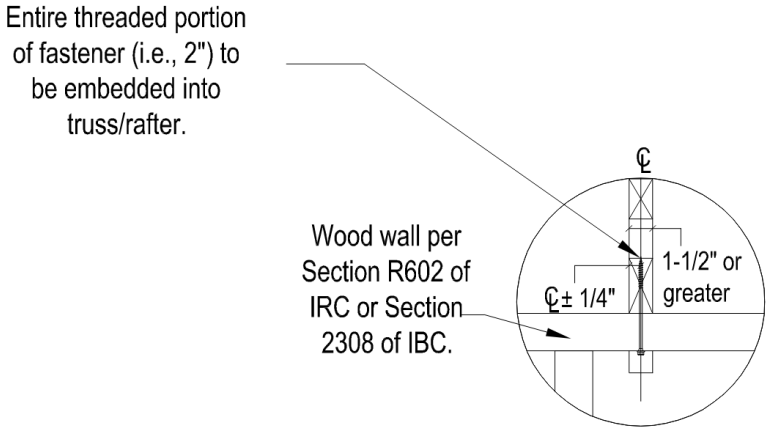

Figure 11. End View of Fastener Connection through Single Top Plate and into Rafter/Truss (Typical)

10 Substantiating Data

10.1 Testing has been performed under the supervision of a professional engineer and/or under the requirements of ISO/IEC 17025 as follows:

10.1.1 Fastener head pull-through and withdrawal testing in accordance with ASTM D1761

10.1.2 Wall assemblies constructed with TimberLOK Fasteners were evaluated for structural performance when used as a truss hold down.

10.2 Information contained herein may include the result of testing and/or data analysis by sources that are approved agencies, approved sources, and/or RDPs. Accuracy of external test data and resulting analysis is relied upon.

10.3 Where applicable, testing and/or engineering analysis are based upon provisions that have been codified into law through state or local adoption of regulations and standards. The developers of these regulations and standards are responsible for the reliability of published content. DrJ's engineering practice may use a regulation-adopted provision as the control. A regulation-endorsed control versus a simulation of the conditions of application to occur establishes a new material as being equivalent to the regulatory provision in terms of quality, strength, effectiveness, fire resistance, durability, and safety.

10.4 The accuracy of the provisions provided herein may be reliant upon the published properties of raw materials, which are defined by the grade mark, grade stamp, mill certificate, or duly authenticated reports from approved agencies and/or approved sources provided by the supplier. These are presumed to be minimum properties and relied upon to be accurate. The reliability of DrJ's engineering practice, as contained in this duly authenticated report, may be dependent upon published design properties by others.

10.5 Testing and engineering analysis: The strength, rigidity, and/or general performance of component parts and/or the integrated structure are determined by suitable tests that simulate the actual conditions of application that occur and/or by accepted engineering practice and experience.[30]

10.6 Where additional condition of use and/or regulatory compliance information is required, please search for TimberLOK on the DrJ Certification website.

11 Findings

11.1 As outlined in **Section 6**, TimberLOK Fasteners have performance characteristics that were tested and/or meet applicable regulations and are suitable for use pursuant to its specified purpose.

11.2 When used and installed in accordance with this duly authenticated report and the manufacturer installation instructions, TimberLOK shall be approved for the following:

Confidential Intellectual Property Is protected by Defend Trade Secrets Act 2016, ©DrJ Engineering, LLC

11.2.1 TPR is not a significant concern for TimberLOK Fasteners at allowable design load levels.

11.2.1.1 The H2.5A connectors had some significant TPR as defined in **Section 6.3.4**, but in no case was TPR in excess of $^1/_8$" at the allowable design load.

11.2.1.2 Comparing the fastener test results in **Table 5**, TPR is not expected to be a significant concern for TimberLOK Fasteners in 2 x 6 walls, since the loading is less eccentric than the H2.5A connectors, and only slightly more eccentric than the tested 2 x 4 connection.

11.2.2 When used and installed in accordance with this report and the manufacturer installation instructions, TimberLOK Fasteners can be used as an acceptable alternative to toenail connections, metal hurricane and seismic clips/straps, or nails to resist the uplift and lateral loads as provided for in **Table 4**.

11.2.3 TimberLOK Fasteners with the proprietary coating are approved for use in:

11.2.3.1 Pressure-treated (ACQ) lumber, provided the conditions set forth by the pressure-treated lumber manufacturer be met, including appropriate strength reductions.

11.2.3.2 Fire-retardant treated lumber, provided the conditions set forth by the fire-retardant treated lumber manufacturer be met, including appropriate strength reductions.

11.2.3.3 Areas with exposure to freshwater.

11.2.3.3.1 Allowable loads shall be adjusted with the Wet service factor, C_M, where applicable.

11.3 For uplift and lateral resistance of joist/rafter and truss to top plate connections, see Report Number 1105-02.

11.4 For uplift design of gable truss to top plate connections, see Report Number 1304-02.

11.5 For uplift design of drag strut truss to top plate connections, see Report Number 1306-01.

11.6 For uplift and lateral resistance of wall to rim joist connections, see Report Number 1306-05.

11.7 Unless exempt by state statute, when TimberLOK Fasteners are to be used as a structural and/or building envelope component in the design of a specific building, the design shall be performed by an RDP.

11.8 Any application specific issues not addressed herein can be engineered by an RDP. Assistance with engineering is available from FastenMaster.

11.9 IBC Section 104.11 (IRC Section R104.11 and IFC Section 104.10[31] are similar) in pertinent part states:

> **104.11 Alternative materials, design and methods of construction and equipment.** The provisions of this code are not intended to prevent the installation of any material or to prohibit any design or method of construction not specifically prescribed by this code. Where the alternative material, design or method of construction is not approved, the building official shall respond in writing, stating the reasons the alternative was not approved.

11.10 **Approved**:[32] Building regulations require that the building official shall accept duly authenticated reports.[33]

11.10.1 An approved agency is *"approved"* when it is ANAB ISO/IEC 17065 accredited.

11.10.2 An approved source is *"approved"* when an RDP is properly licensed to transact engineering commerce.

11.10.3 Federal law, Title 18 US Code Section 242, requires that where the alternative product, material, service, design, assembly, and/or method of construction is not approved, the building official shall respond in writing, stating the reasons why the alternative was not approved. Denial without written reason deprives a protected right to free and fair competition in the marketplace.

11.11 DrJ is a licensed engineering company, employs licensed RDPs and is an ANAB-Accredited Product Certification Body – Accreditation #1131.

11.12 Through the IAF Multilateral Agreements (MLA), this duly authenticated report can be used to obtain product approval in any jurisdiction or country because all ANAB ISO/IEC 17065 duly authenticated reports are equivalent.[34]

Confidential Intellectual Property Is protected by Defend Trade Secrets Act 2016, ©DrJ Engineering, LLC

12 Conditions of Use

12.1 Material properties shall not fall outside the boundaries defined in **Section 6**.

12.2 As defined in **Section 6**, where material and/or engineering mechanics properties are created for load resisting design purposes, the resistance to the applied load shall not exceed the ability of the defined properties to resist those loads using the principles of accepted engineering practice.

12.3 Structural framing members (i.e., wood, masonry, concrete, steel) connected with TimberLOK Fasteners shall be designed in accordance with the requirements of their specific design standards/specifications as referenced in the building code adopted by the jurisdiction in which the project is to be constructed.

12.4 Loads applied shall not exceed those recommended by the manufacturer or as defined in this report.

12.5 When required by adopted legislation and enforced by the building official, also known as the authority having jurisdiction (AHJ) in which the project is to be constructed:

12.5.1 Any calculations incorporated into the construction documents shall conform to accepted engineering practice and, when prepared by an approved source, shall be approved when signed and sealed.

12.5.2 This report and the installation instructions shall be submitted at the time of permit application.

12.5.3 This innovative product has an internal quality control program and a third-party quality assurance program.

12.5.4 At a minimum, this innovative product shall be installed per **Section 9** of this report.

12.5.5 The review of this report by the AHJ shall comply with IBC Section 104 and IBC Section 105.4.

12.5.6 This innovative product has an internal quality control program and a third party quality assurance program in accordance with IBC Section 104.4, IBC Section 110.4, IBC Section 1703, IRC Section R104.4, and IRC Section R109.2.

12.5.7 The application of this innovative product in the context of this report is dependent upon the accuracy of the construction documents, implementation of installation instructions, inspection as required by IBC Section 110.3, IRC Section R109.2, and any other regulatory requirements that may apply.

12.6 The approval of this report by the AHJ shall comply with IBC Section 1707.1, where legislation states in part, "*the building official shall accept duly authenticated reports from approved agencies in respect to the quality and manner of use of new material or assemblies as provided for in Section 104.11*," all of IBC Section 104, and IBC Section 105.4.

12.7 Design loads shall be determined in accordance with the regulations adopted by the jurisdiction in which the project is to be constructed and/or by the building designer (i.e., owner or RDP).

12.8 The actual design, suitability, and use of this report for any particular building, is the responsibility of the owner or the authorized agent of the owner.

13 Identification

13.1 The innovative product listed in **Section 1.1** is identified by a label on the board or packaging material bearing the manufacturer name, product name, this report number, and other information to confirm code compliance.

13.2 Additional technical information can be found at www.fastenmaster.com.

14 Review Schedule

14.1 This report is subject to periodic review and revision. For the latest version, visit drjcertification.org.

14.2 For information on the status of this report, please contact DrJ Certification.

Confidential Intellectual Property Is protected by Defend Trade Secrets Act 2016, ©DrJ Engineering, LLC

15 Approved for Use Pursuant to U.S. and International Legislation Defined in Appendix A

15.1 are included in this report published by an approved agency that is concerned with evaluation of products or services, maintains periodic inspection of the production of listed materials or periodic evaluation of services. This report states either that the material, product, or service meets recognized standards or has been tested and found suitable for a specified purpose. This report meets the legislative intent and definition of being acceptable to the AHJ.

Confidential Intellectual Property Is protected by Defend Trade Secrets Act 2016, ©DrJ Engineering, LLC

Appendix A

1 Legislation that Authorizes AHJ Approval

1.1 **Fair Competition**: State legislatures have adopted Federal regulations for the examination and approval of building code referenced and alternative products, materials, designs, services, assemblies, and/or methods of construction that:

1.1.1 Advance innovation.

1.1.2 Promote competition so all businesses have the opportunity to compete on price and quality in an open market on a level playing field unhampered by anticompetitive constraints.

1.1.3 Benefit consumers through lower prices, better quality, and greater choice.

1.2 **Adopted Legislation**: The following local, state and federal regulations affirmatively authorize this innovative product to be approved by AHJs, delegates of building departments, and/or delegates of an agency of the federal government:

1.2.1 Interstate commerce is governed by the Federal Department of Justice to encourage the use of innovative products, materials, designs, services, assemblies, and/or methods of construction. The goal is to "*protect economic freedom and opportunity by promoting free and fair competition in the marketplace*."

1.2.2 Title 18 US Code Section 242 affirms and regulates the right of individuals and businesses to freely and fairly have new products, materials, designs, services, assemblies, and/or methods of construction approved for use in commerce. Disapproval of alternatives shall be based upon non-conformance with respect to specific provisions of adopted legislation and shall be provided in writing stating the reasons why the alternative was not approved, with reference to the specific legislation violated.

1.2.3 The federal government and each state have a public records act. In addition, each state also has legislation that mimics the federal Defend Trade Secrets Act 2016 (DTSA),[35] where providing test reports, engineering analysis, and/or other related IP/TS is subject to prison of not more than ten years[36] and/or a $5,000,000 fine or 3 times the value of[37] the Intellectual Property (IP) and Trade Secrets (TS).

1.2.3.1 Compliance with public records and trade secret legislation requires approval through the use of Listings, certified reports, Technical Evaluation Reports, duly authenticated reports, and/or research reports prepared by approved agencies and/or approved sources.

1.2.4 For new materials[38] that are not specifically provided for in any regulation, the design strengths and permissible stresses shall be established by tests, where suitable load tests simulate the actual loads and conditions of application that occur.

1.2.5 The design strengths and permissible stresses of any structural material shall conform to the specifications and methods of design using accepted engineering practice.[39]

1.2.6 The commerce of approved sources (i.e., registered PEs) is regulated by professional engineering legislation. Professional engineering commerce shall always be approved by AHJs, except where there is evidence provided in writing, that specific legislation have been violated by an individual registered PE.

1.2.7 The AHJ shall accept duly authenticated reports from approved agencies in respect to the quality and manner of use of new materials or assemblies as provided for in IBC Section 104.11.[40]

Confidential Intellectual Property Is protected by Defend Trade Secrets Act 2016, ©DrJ Engineering, LLC

1.3 **Approved**[41] **by Los Angeles**: The Los Angeles Municipal Code (LAMC) states in pertinent part that the provisions of LAMC are not intended to prevent the use of any material, device, or method of construction not specifically prescribed by LAMC. The Department shall use Part III, Recognized Standards in addition to Part II, Uniform Building Code Standards of Division 35, Article 1, Chapter IX of the LAMC in evaluation of products for approval where such standard exists for the product or the material and may use other approved standards that apply. Whenever tests or certificates of any material or fabricated assembly are required by Chapter IX of the LAMC, such tests or certification shall be made by a testing agency approved by the Superintendent of Building to conduct such tests or provide such certifications. The testing agency shall publish the scope and limitation(s) of the listed material or fabricated assembly.[42] The Superintendent of Building Approved Testing Agency Roster is provided by the Los Angeles Department of Building and Safety (LADBS). The Center for Building Innovation (CBI) Certificate of Approval License is TA24945. Tests and certifications found in a DrJ Listing are LAMC approved. In addition, the Superintendent of Building shall accept duly authenticated reports from approved agencies in respect to the quality and manner of use of new materials or assemblies as provided for in the California Building Code (CBC) Section 1707.1.[43]

1.4 **Approved by Chicago**: The Municipal Code of Chicago (MCC) states in pertinent part that an Approved Agency is a Nationally Recognized Testing Laboratory (NRTL) acting within its recognized scope and/or a certification body accredited by the American National Standards Institute (ANSI) acting within its accredited scope. Construction materials and test procedures shall conform to the applicable standards listed in the MCC. Sufficient technical data shall be submitted to the building official to substantiate the proposed use of any product, material, service, design, assembly, and/or method of construction not specifically provided for in the MCC. This technical data shall consist of research reports from approved sources (i.e., MCC defined Approved Agencies).

1.5 **Approved by New York City**: The 2022 NYC Building Code (NYCBC) states in part that an approved agency shall be deemed[44] an approved testing agency via ISO/IEC 17025 accreditation, an approved inspection agency via ISO/IEC 17020 accreditation, and an approved product evaluation agency via ISO/IEC 17065 accreditation. Accrediting agencies, other than federal agencies, must be members of an internationally recognized cooperation of laboratory and inspection accreditation bodies subject to a mutual recognition agreement[45] (i.e., ANAB, International Accreditation Forum also known as IAF, etc.).

1.6 **Approved by Florida**: Statewide approval of products, methods or systems of construction shall be approved, without further evaluation by:

1.6.1 A certification mark or listing of an approved certification agency,

1.6.2 A test report from an approved testing laboratory,

1.6.3 A product evaluation report based upon testing or comparative or rational analysis, or a combination thereof, from an approved product evaluation entity, or

1.6.4 A product evaluation report based upon testing, comparative or rational analysis, or a combination thereof, developed, signed, and sealed by a professional engineer or architect, licensed in Florida.

1.6.5 For local product approval, products or systems of construction shall demonstrate compliance with the structural wind load requirements of the Florida Building Code (FBC) through one of the following methods:

1.6.5.1 A certification mark, listing, or label from a commission-approved certification agency indicating that the product complies with the code,

1.6.5.2 A test report from a commission-approved testing laboratory indicating that the product tested complies with the code,

1.6.5.3 A product-evaluation report based upon testing, comparative or rational analysis, or a combination thereof, from a commission-approved product evaluation entity which indicates that the product evaluated complies with the code,

Confidential Intellectual Property Is protected by Defend Trade Secrets Act 2016, ©DrJ Engineering, LLC

1.6.5.4 A product-evaluation report or certification based upon testing or comparative or rational analysis, or a combination thereof, developed and signed and sealed by a Florida professional engineer or Florida registered architect, which indicates that the product complies with the code, or

1.6.5.5 A statewide product approval issued by the Florida Building Commission.

1.6.6 The Florida Department of Business and Professional Regulation (DBPR) website provides a listing of companies certified as a Product Evaluation Agency (i.e., EVLMiami 13692), a Product Certification Agency (i.e., CER10642), and as a Florida Registered Engineer (i.e., ANE13741).

1.7 **Approved by Miami-Dade County (i.e., Notice of Acceptance [NOA])**: A Florida statewide approval is an NOA. An NOA is a Florida local product approval. By Florida law, Miami-Dade County shall accept the statewide and local Florida Product Approval as provided for in Florida legislation 553.842 and 553.8425.

1.8 **Approved by New Jersey**: Pursuant to the 2018 Building Code of New Jersey in IBC Section 1707.1 General,[46] it states: "*In the absence of approved rules or other approved standards, the building official shall accept duly authenticated reports from approved agencies in respect to the quality and manner of use of new materials or assemblies as provided for in the administrative provisions of the Uniform Construction Code (N.J.A.C. 5:23)*".[47] Furthermore N.J.A.C 5:23-3.7 states: "*Municipal approvals of alternative materials, equipment, or methods of construction*."

1.8.1 **Approvals**: Alternative materials, equipment, or methods of construction shall be approved by the appropriate subcode official provided the proposed design is satisfactory and that the materials, equipment, or methods of construction are suitable for the intended use and are at least the equivalent in quality, strength, effectiveness, fire resistance, durability, and safety of those conforming with the requirements of the regulations.

1.8.1.1 A field evaluation label and report or letter issued by a nationally recognized testing laboratory verifying that the specific material, equipment, or method of construction meets the identified standards or has been tested and found to be suitable for the intended use, shall be accepted by the appropriate subcode official as meeting the requirements of the above.

1.8.1.2 Reports of engineering findings issued by nationally recognized evaluation service programs such as but not limited to, the Building Officials and Code Administrators (BOCA), the International Conference of Building Officials (ICBO), the Southern Building Code Congress International (SBCCI), the International Code Council (ICC), and the National Evaluation Service, Inc., shall be accepted by the appropriate subcode official as meeting the requirements of the above.

1.8.2 The New Jersey Department of Community Affairs has confirmed that technical evaluation reports, from any accredited entity listed by ANAB, meets the requirements of item the previous paragraph, given that the listed entities are no longer in existence and/or do not provide "*reports of engineering findings*."

1.9 **Approved by the Code of Federal Regulations Manufactured Home Construction and Safety Standards**: Pursuant to Title 24, Subtitle B, Chapter XX, Part 3282.14[48] and Part 3280,[49] the Department encourages innovation and the use of new technology in manufactured homes. The design and construction of a manufactured home shall conform to the provisions of Part 3282 and Part 3280 where key approval provisions in mandatory language follow:

1.9.1 *"All construction methods shall be in conformance with accepted engineering practices."*

1.9.2 *"The strength and rigidity of the component parts and/or the integrated structure shall be determined by engineering analysis or by suitable load tests to simulate the actual loads and conditions of application that occur."*

1.9.3 *"The design stresses of all materials shall conform to accepted engineering practice."*

Confidential Intellectual Property Is protected by Defend Trade Secrets Act 2016, ©DrJ Engineering, LLC

1.10 **Approval by US, Local and State Jurisdictions in General**: In all other local and state jurisdictions, the adopted building code legislation states in pertinent part that:

1.10.1 For new materials that are not specifically provided for in this code, the design strengths and permissible stresses shall be established by tests.[50]

1.10.2 For innovative alternatives and/or methods of construction, the building official shall accept duly authenticated reports from approved agencies with respect to the quality and manner of use of new materials or assemblies.[51]

1.10.2.1 An approved agency is *"approved"* when it is ANAB ISO/IEC 17065 accredited. DrJ Engineering, LLC (DrJ) is in the ANAB directory.

1.10.2.2 An approved source is *"approved"* when an RDP is properly licensed to transact engineering commerce. The regulatory authority governing approved sources is the state legislature via its professional engineering regulations.[52]

1.10.3 The design strengths and permissible stresses of any structural material…shall conform to the specifications and methods of design of accepted engineering practice performed by an approved source.[53]

1.11 **Approval by International Jurisdictions**: The USMCA and GATT agreements provide for approval of innovative materials, designs, services, and/or methods of construction through the Agreement on Technical Barriers to Trade and the IAF Multilateral Recognition Arrangement (MLA), where these agreements:

1.11.1 State that conformity assessment procedures (i.e., ISO/IEC 17020, 17025, 17065, etc.) are prepared, adopted, and applied so as to grant access for suppliers of like products originating in the territories of other Members under conditions no less favourable than those accorded to suppliers of like products of national origin or originating in any other country, in a comparable situation.

1.11.2 **Approved**: The purpose of the MLA is to ensure mutual recognition of accredited certification and validation/verification statements between signatories to the MLA and subsequently, acceptance of accredited certification and validation/verification statements in many markets based on one accreditation for the timely approval of innovative materials, designs, services, and/or methods of construction.

1.11.3 ANAB is an IAF-MLA signatory where recognition of certificates, validation, and verification statements issued by conformity assessment bodies accredited by all other signatories of the IAF MLA, with the appropriate scope, shall be approved.[54]

1.11.4 Therefore, all ANAB ISO/IEC 17065 duly authenticated reports are approval equivalent.[55]

1.12 Approval equity is a fundamental commercial and legal principle.[56]

Confidential Intellectual Property Is protected by Defend Trade Secrets Act 2016, ©DrJ Engineering, LLC

Issue Date: March 26, 2025

Subject to Renewal: April 1, 2027

FBC Supplement to Report Number 1308-05

REPORT HOLDER: FastenMaster

1 Evaluation Subject

1.1 FastenMaster TimberLOK Heavy Duty Wood Screws

2 Purpose and Scope

2.1 Purpose

2.1.1 The purpose of this Report Supplement is to show FastenMaster TimberLOK Heavy Duty Wood Screws, recognized in Report Number 1308-05, have also been evaluated for compliance with the codes listed below as adopted by the Florida Building Commission.

2.2 *Applicable Code Editions*

2.2.1 FBC-B—20, 23: Florida Building Code – Building FL47410

2.2.2 *FBC-R—20, 23: Florida Building Code – Residential FL47410*

3 Conclusions

3.1 FastenMaster TimberLOK Heavy Duty Wood Screws, described in Report Number 1308-05, comply with the FBC-B and FBC-R and are subject to the conditions of use described in this supplement.

3.2 Where there are variations between the IBC and IRC and the FBC-B and FBC-R applicable to this report, they are listed here:

3.2.1 FBC-B Section 104.4 and Section 110.4 are reserved.

3.2.2 FBC-R Section R104, Section R109, and R802.11 are reserved.

3.2.3 FBC-B Section 2304.10.5 replaces IBC Section 2304.10.6.

4 Conditions of Use

4.1 FastenMaster TimberLOK Heavy Duty Wood Screws, described in Report Number 1308-05, must comply with all of the following conditions:

4.1.1 All applicable sections in Report Number 1308-05.

4.2 The design, installation, and inspections are in accordance with additional requirements of FBC-B Chapter 16 and Chapter 17, as applicable.

Confidential Intellectual Property Is protected by Defend Trade Secrets Act 2016, ©DrJ Engineering, LLC

Notes

1 For more information, visit drjcertification.org or call us at 608-310-6748.

2 2018 IBC Section 2304.10.5

3 https://up.codes/viewer/wyoming/ibc-2021/chapter/17/special-inspections-and-tests#1702

4 Alternative Materials, Design and Methods of Construction and Equipment: The provisions of any regulation code are not intended to prevent the installation of any material or to prohibit any design or method of construction not specifically prescribed by a regulation. Please review https://www.justice.gov/atr/mission and https://up.codes/viewer/colorado/ibc-2021/chapter/1/scope-and-administration#104.11

5 https://up.codes/viewer/wyoming/ibc-2021/chapter/17/special-inspections-and-tests#1706:~:text=the%20design%20strengths%20and%20permissible%20stresses%20shall%20be%20established%20by%20tests%20as

6 The design strengths and permissible stresses of any structural material shall conform to the specifications and methods of design of accepted engineering practice. https://up.codes/viewer/wyoming/ibc-2021/chapter/17/special-inspections-and-tests#1706:~:text=shall%20conform%20to%20the%20specifications%20and%20methods%20of%20design%20of%20accepted%20engineering%20practice

7 https://up.codes/viewer/wyoming/ibc-2021/chapter/17/special-inspections-and-tests#1707.1:~:text=the%20building%20official%20shall%20accept%20duly%20authenticated%20reports%20from%20approved%20agencies

8 https://up.codes/viewer/wyoming/ibc-2021/chapter/17/special-inspections-and-tests#1703.4.2

9 https://up.codes/viewer/wyoming/ibc-2021/chapter/2/definitions#approved_agency

10 https://up.codes/viewer/wyoming/ibc-2021/chapter/2/definitions#approved_source

11 https://www.law.cornell.edu/uscode/text/18/1832 (b) Any organization that commits any offense described in subsection (a) shall be fined not more than the greater of $5,000,000 or 3 times the value of the stolen trade secret to the organization, including expenses for research and design and other costs of reproducing the trade secret that the organization has thereby avoided. The federal government and each state have a public records act. To follow DTSA and comply state public records and trade secret legislation requires approval through ANAB ISO/IEC 17065 accredited certification bodies or approved sources. For more information, please review this website: Intellectual Property and Trade Secrets.

12 https://www.nspe.org/resources/issues-and-advocacy/professional-policies-and-position-statements/regulation-professional AND https://apassociation.org/list-of-engineering-boards-in-each-state-archive/

13 https://www.cbitest.com/accreditation/

14 https://up.codes/viewer/colorado/ibc-2021/chapter/1/scope-and-administration#104:~:text=to%20enforce%20the%20provisions%20of%20this%20code

15 https://up.codes/viewer/colorado/ibc-2021/chapter/1/scope-and-administration#104.11:~:text=Where%20the%20alternative%20material%2C%20design%20or%20method%20of%20construction%20is%20not%20approved%2C%20the%20building%20official%20shall%20respond%20in%20writing%2C%20stating%20the%20reasons%20why%20the%20alternative%20was%20not%20approved AND https://up.codes/viewer/colorado/ibc-2021/chapter/1/scope-and-administration#105.3.1:~:text=If%20the%20application%20or%20the%20construction%20documents%20do%20not%20conform%20to%20the%20requirements%20of%20pertinent%20laws%2C%20the%20building%20official%20shall%20reject%20such%20application%20in%20writing%2C%20stating%20the%20reasons%20therefore

16 https://up.codes/viewer/colorado/ibc-2021/chapter/17/special-inspections-and-tests#1707.1:~:text=the%20building%20official%20shall%20accept%20duly%20authenticated%20reports%20from%20approved%20agencies%20in%20respect%20to%20the%20quality%20and%20manner%20of%20use%20of%20new%20materials%20or%20assemblies%20as%20provided%20for%20in%20Section%20104.11

17 https://iaf.nu/en/about-iaf-mla/#:~:text=it%20is%20required%20to%20recognise%20certificates%20and%20validation%20and%20verification%20statements%20issued%20by%20conformity%20assessment%20bodies%20accredited%20by%20all%20other%20signatories%20of%20the%20IAF%20MLA%2C%20with%20the%20appropriate%20scope

18 True for all ANAB accredited product evaluation agencies and all International Trade Agreements.

19 https://www.justice.gov/crt/deprivation-rights-under-color-law AND https://www.justice.gov/atr/mission

20 Unless otherwise noted, all references in this Listing are from the 2021 version of the codes and the standards referenced therein. This material, product, design, service and/or method of construction also complies with the 2000-2021 versions of the referenced codes and the standards referenced therein.

21 All references to the FBC-B and FBC-R are the same as the 2021 IBC and 2021 IRC unless otherwise noted in the Florida Supplement at the end of this report.

22 https://www.ecfr.gov/current/title-24/subtitle-B/chapter-XX/part-3280#p-3280.2(Listed%20or%20certified); https://up.codes/viewer/colorado/ibc-2021/chapter/2/definitions#listed AND https://up.codes/viewer/colorado/ibc-2021/chapter/2/definitions#labeled

23 2018 IRC Section R802.11.1.1

24 2018 IRC Section R802.11.1.2

25 https://up.codes/viewer/colorado/ibc-2021/chapter/17/special-inspections-and-tests#1703.4

26 https://www.ecfr.gov/current/title-24/subtitle-B/chapter-XX/part-3280#:~:text=All%20construction%20methods%20shall%20be%20in%20conformance%20with%20accepted%20engineering%20practices%20to%20insure%20durable%2C%20livable%2C%20and%20safe%20housing%20and%20shall%20demonstrate%20acceptable%20workmanship%20reflecting%20journeyman%20quality%20of%20work%20of%20the%20various%20trades

27 https://www.ecfr.gov/current/title-24/subtitle-B/chapter-XX/part-3280#:~:text=The%20strength%20and%20rigidity%20of%20the%20component%20parts%20and/or%20the%20integrated%20structure%20shall%20be%20determined%20by%20engineering%20analysis%20or%20by%20suitable%20load%20tests%20to%20simulate%20the%20actual%20loads%20and%20conditions%20of%20application%20that%20occur

28 2018 IBC Section 2304.10.5

29 Qualification is performed by a legislatively defined Accreditation Body. ANSI National Accreditation Board (ANAB) is the largest independent accreditation body in North America and provides services in more than 75 countries. DrJ is an ANAB accredited product certification body.

30 See Code of Federal Regulations (CFR) Title 24 Subtitle B Chapter XX Part 3280 for definition.

Confidential Intellectual Property Is protected by Defend Trade Secrets Act 2016, ©DrJ Engineering, LLC

31 2018 IFC Section 104.9

32 Approved is an adjective that modifies the noun after it. For example, Approved Agency means that the Agency is accepted officially as being suitable in a particular situation. This example conforms to IBC/IRC/IFC Section 201.4 where the building code authorizes sentences to have an ordinarily accepted meaning such as the context implies.

33 https://up.codes/viewer/wyoming/ibc-2021/chapter/17/special-inspections-and-tests#1707.1

34 Multilateral approval is true for all ANAB accredited product evaluation agencies and all International Trade Agreements.

35 http://www.drjengineering.org/AppendixC AND https://www.drjcertification.org/cornell-2016-protection-trade-secrets

36 https://www.law.cornell.edu/uscode/text/18/1832#:~:text=imprisoned%20not%20more%20than%2010%20years

37 https://www.law.cornell.edu/uscode/text/18/1832#:~:text=Any%20organization%20that,has%20thereby%20avoided

38 https://up.codes/viewer/wyoming/ibc-2021/chapter/17/special-inspections-and-tests#1706.2

39 IBC 2021, Section 1706.1 Conformance to Standards

40 IBC 2021, Section 1707 Alternative Test Procedure, 1707.1 General

41 See **Section 11** for the distilled building code definition of **Approved**.

42 Los Angeles Municipal Code, SEC. 98.0503. TESTING AGENCIES

43 https://up.codes/viewer/california/ca-building-code-2022/chapter/17/special-inspections-and-tests#1707.1

44 New York City, The Rules of the City of New York, § 101-07 Approved Agencies

45 New York City, The Rules of the City of New York, § 101-07 Approved Agencies

46 https://up.codes/viewer/new_jersey/ibc-2018/chapter/17/special-inspections-and-tests#1707.1

47 https://www.nj.gov/dca/divisions/codes/codreg/ucc.html

48 https://www.ecfr.gov/current/title-24/subtitle-B/chapter-XX/part-3282/subpart-A/section-3282.14

49 https://www.ecfr.gov/current/title-24/subtitle-B/chapter-XX/part-3280

50 IBC 2021, Section 1706 Design Strengths of Materials, 1706.2 New Materials. Adopted law pursuant to IBC model code language 1706.2.

51 IBC 2021, Section 1707 Alternative Test Procedure, 1707.1 General. Adopted law pursuant to IBC model code language 1707.1.

52 https://www.nspe.org/resources/issues-and-advocacy/professional-policies-and-position-statements/regulation-professional AND https://apassociation.org/list-of-engineering-boards-in-each-state-archive/

53 IBC 2021, Section 1706 Design Strengths of Materials, Section 1706.1 Conformance to Standards Adopted law pursuant to IBC model code language 1706.1.

54 https://iaf.nu/en/about-iaf-mla/#:~:text=it%20is%20required%20to%20recognise%20certificates%20and%20validation%20and%20verification%20statements%20issued%20by%20conformity%20assessment%20bodies%20accredited%20by%20all%20other%20signatories%20of%20the%20IAF%20MLA%2C%20with%20the%20appropriate%20scope

55 True for all ANAB accredited product evaluation agencies and all International Trade Agreements.

56 https://www.justice.gov/crt/deprivation-rights-under-color-law AND https://www.justice.gov/atr/mission

Confidential Intellectual Property Is protected by Defend Trade Secrets Act 2016, ©DrJ Engineering, LLC