Listing and Technical Evaluation Report™

A Duly Authenticated Report from an Approved Agency

Report No: 1304-02

Issue Date: April 25, 2013

Revision Date: March 26, 2025

Subject to Renewal: April 1, 2027

Design for Uplift Using TimberLOK® Screws to Connect Gable Trusses to Wall Top Plates

Trade Secret Report Holder:

OMG®, Inc. dba FastenMaster®

800-518-3569 Website: www.fastenmaster.com Email: mguthrie@omginc.com

CSI Designations:

DIVISION: 06 00 00 - WOOD, PLASTICS AND COMPOSITES Section: 06 00 90 - Wood and Plastic Fastenings

1 Innovative Product Evaluated[1]

1.1 FastenMaster TimberLOK Heavy Duty Wood Screws

Kirk Grundahl Digitally signed by Kirk Grundahl DN: C=US, E=kgrundahl@qualtim.com, O=Qualtim, CN=Kirk Grundahl Date: 2025.03.26 10:13:47-05'00'

KIRK H. GRUNDAHL LICENSE No. 73618 STATE OF FLORIDA PROFESSIONAL ENGINEER

March 26, 2025

2 Product Description and Materials

2.1 The innovative product evaluated in this report is shown in **Figure 1**.

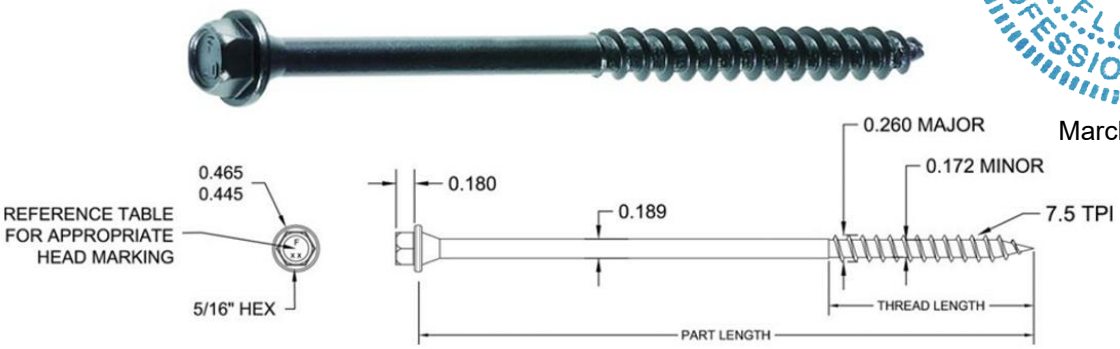

Figure 1. TimberLOK Fastener

2.2 TimberLOK fasteners are manufactured using a standard cold-formed process followed by a heat-treating process from 1022 carbon steel or 10B21 wire conforming to ASTM A510 with a minimum ultimate tensile strength of 60-ksi.

2.3 The specifications of the fasteners evaluated in this report are designated in **Table 1**.

Confidential Intellectual Property Is protected by Defend Trade Secrets Act 2016, ©DrJ Engineering, LLC

Table 1. Fastener Specifications for Evaluated TimberLOK Fasteners

Product Name	Fastener Designation[1]	Head Marking	Dimension (in)					Bending Yield Strength[4], F_{yb} (psi)	Allowable Fastener Strength (lb)	
			Fastener Length[2]	Thread Length[3]	Shank Diameter	Minor Diameter	Major Diameter		Tensile	Shear[5]
TimberLOK 4"	TLOK04	F4.0	4.0	2.0	0.189	0.172	0.260	190,600	1,300	940
TimberLOK 6"	TLOK06	F6.0	6.0							

SI: 1 in = 25.4 mm
Fastener designations are found on the product packaging. Individual fasteners may be marked according to this table.
Fastener length is measured from the bottom-side of the head to the tip.
Thread length includes the tapered tip.
Bending yield strength determined in accordance with ASTM F1575 and based the minor diameter.
Allowable shear strength values apply to the unthreaded shank portion of the fastener.

2.4 *Corrosion Resistance*

2.4.1 TimberLOK fasteners have a proprietary coating, which may be used as an alternative to the protection provided by code-approved hot-dipped galvanized coatings meeting ASTM A153, Class D (IBC Section 2304.10.6[2] and IRC Section R317.3).

2.4.1.1 TimberLOK fasteners may be used where screws are required to exhibit corrosion resistance when exposed to adverse environmental conditions, which are subject to the limitations of this report. TimberLOK fasteners have been evaluated for use in wood treated with waterborne Alkaline Copper Quaternary, Type D (ACQ-D) preservatives with a retention of 0.40-pcf (6.4 kg/m^3).

2.5 *Pressure-Preservative Treated (PPT) Wood Applications*

2.5.1 TimberLOK fasteners having the proprietary coating are recognized for use in PPT lumber provided the conditions set forth by the PPT lumber manufacturer be met, including appropriate strength reductions.

2.6 *Fire-Retardant Treated (FRT) Wood Applications*

2.6.1 TimberLOK fasteners having the proprietary coating are recognized for use in FRT lumber provided the conditions set forth by the FRT lumber manufacturer be met, including appropriate strength reductions.

2.7 TimberLOK fasteners are approved for use in interior applications.

2.8 In-plant quality control procedures, under which TimberLOK fasteners are manufactured, are audited through an inspection process performed by an approved agency.

2.9 As needed, review material properties for design in **Section 6** and the regulatory evaluation in **Section 8**.

3 Definitions

3.1 New Materials[3] are defined as building materials, equipment, appliances, systems, or methods of construction not provided for by prescriptive and/or legislatively adopted regulations, known as alternative materials.[4] The design strengths and permissible stresses shall be established by tests[5] and/or engineering analysis.[6]

3.2 Duly authenticated reports[7] and research reports[8] are test reports and related engineering evaluations, which are written by an approved agency[9] and/or an approved source.[10]

3.2.1 These reports contain intellectual property and/or trade secrets, which are protected by the Defend Trade Secrets Act (DTSA).[11]

3.3 An approved agency is *"approved"* when it is ANAB ISO/IEC 17065 accredited. DrJ Engineering, LLC (DrJ) is listed in the ANAB directory.

Confidential Intellectual Property Is protected by Defend Trade Secrets Act 2016, ©DrJ Engineering, LLC

3.4 An approved source is *"approved"* when a professional engineer (i.e., Registered Design Professional) is properly licensed to transact engineering commerce. The regulatory authority governing approved sources is the state legislature via its professional engineering regulations.[12]

3.5 Testing and/or inspections conducted for this duly authenticated report were performed by an ISO/IEC 17025 accredited testing laboratory, an ISO/IEC 17020 accredited inspection body, and/or a licensed Registered Design Professional (RDP).

3.5.1 The Center for Building Innovation (CBI) is ANAB[13] ISO/IEC 17025 and ISO/IEC 17020 accredited.

3.6 The regulatory authority shall enforce[14] the specific provisions of each legislatively adopted regulation. If there is a non-conformance, the specific regulatory section and language of the non-conformance shall be provided in writing[15] stating the nonconformance and the path to its cure.

3.7 The regulatory authority shall accept duly authenticated reports from an approved agency and/or an approved source with respect to the quality and manner of use of new materials or assemblies as provided for in regulations regarding the use of alternative materials, designs, or methods of construction.[16]

3.8 ANAB is an International Accreditation Forum (IAF) Multilateral Recognition Arrangement (MLA) signatory where recognition of certificates, validation and verification statements issued by conformity assessment bodies accredited by all other signatories of the IAF MLA with the appropriate scope, shall be approved.[17] Therefore, all ANAB ISO/IEC 17065 duly authenticated reports are approval equivalent.[18]

3.9 Approval equity is a fundamental commercial and legal principle.[19]

4 Applicable Standards for the Listing; Regulations for the Regulatory Evaluation[20]

4.1 *Standards*

4.1.1 *ANSI/AWC NDS: National Design Specification (NDS) for Wood Construction*

4.1.2 *ASTM A153: Standard Specification for Zinc Coating (Hot-Dip) on Iron and Steel Hardware*

4.1.3 *ASTM A510: Standard Specification for General Requirements for Wire Rods and Coarse Round Wire, Carbon Steel, and Alloy Steel*

4.1.4 *ASTM D1761: Standard Test Methods for Mechanical Fasteners in Wood*

4.1.5 *AWC TR 12: General Dowel Equations for Calculating Lateral Connection Values*

4.2 *Regulations*

4.2.1 *IBC – 15, 18, 21: International Building Code®*

4.2.2 *IRC – 15, 18, 21: International Residential Code®*

4.2.3 *FBC-B—20, 23: Florida Building Code – Building[21] FL47410*

4.2.4 *FBC-R—20, 23: Florida Building Code – Residential[21] FL47410*

5 Listed[22]

5.1 Equipment, materials, products, or services included in a List published by a nationally recognized testing laboratory (i.e., CBI), approved agency (i.e., CBI and DrJ), and/or approved source (i.e., DrJ), or other organization concerned with product evaluation (i.e., DrJ) that maintains periodic inspection (i.e., CBI) of production of listed equipment or materials, and whose listing states either that the equipment or material meets nationally recognized standards or has been tested and found suitable for use in a specified manner.

Confidential Intellectual Property Is protected by Defend Trade Secrets Act 2016, ©DrJ Engineering, LLC

6 Tabulated Properties Generated from Nationally Recognized Standards

6.1 *Wood-Framed Construction*

6.1.1 TimberLOK fasteners are used to attach minimum 1½" wide gable end wood truss bottom chords to wood walls that meet the requirements of IBC Section 2308 or IRC Section R602 for wood structural framing members.

6.1.1.1 Wood structural framing members may be dimensional (sawn) lumber or Structural Composite Lumber (SCL).

6.1.2 The fasteners provide resistance to uplift and lateral loads applied parallel and/or perpendicular to the wall or structural framing member (see **Figure 2**).

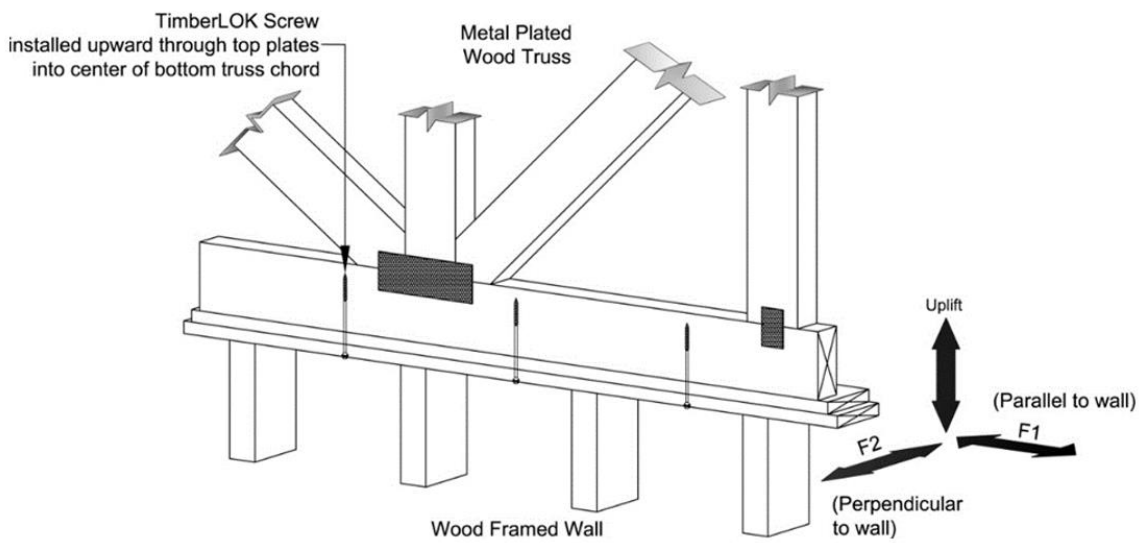

Figure 2. Uplift and Lateral Load Orientations

6.1.3 Walls shall consist of either a single or double top plate designed in accordance with IBC Section 2308.5.3.2 or IRC Section R602.3.2.

6.1.4 See **Table 2** for the design procedure and TimberLOK allowable design values.

6.1.5 See **Section 9** for installation requirements.

6.1.6 TimberLOK fasteners are used in buildings requiring wind design in accordance with IBC Section 1609 or wind analysis in accordance with IRC Section R301.2.1.

6.1.7 Use of TimberLOK fasteners in buildings requiring seismic analysis in accordance with IBC Section 1613 or IRC Section R301.2.2, is outside the scope of this report.

6.2 *Design Concepts and Allowable Design Loads*

6.2.1 Allowable design loads for uplift and lateral resistance (parallel [F1] and perpendicular [F2] to the plane of the wall or structural member, as shown in **Figure 2**) are provided in **Table 2** for TimberLOK fasteners. Allowable design loads are listed for selected load durations, and specific gravities and are applicable to fasteners installed in accordance with the procedures described in **Section 9**.

Confidential Intellectual Property Is protected by Defend Trade Secrets Act 2016, ©DrJ Engineering, LLC

Table 2. Allowable Loads for Uplift & Lateral Resistance for Selected Load Durations and Wood-Specific Gravities Using TimberLOK Fasteners

Fastener Designation	Minimum Penetration into Truss/Rafter/Wood Structural Support (in)	Species Group (Specific Gravity)[1,2,4]	Uplift[3,4,5] (lb)			Lateral (lb)[4,5]					
						F1 Parallel to Wall			F2[3] Perpendicular to Wall		
			1.0	1.33	1.60	1.0	1.33	1.60	1.0	1.33	1.60
TimberLOK TLOK04 or TLOK06	2	Southern Pine (0.55)	390	520	620	255	340	410	280	375	450
		Douglas Fir-Larch (0.50)	340	450	540	240	320	385	265	350	425
		Spruce-Pine-Fir/Hem-Fir (0.42)	260	350	420	210	280	340	230	305	370

SI: 1 in = 25.4 mm, 1 lb/ft = 0.0146 kN/m

1. Wood truss and rafter members shall be a minimum of 2" nominal thickness. Design of truss and rafter members to be by others.

Equivalent specific gravity of Structural Composite Lumber (SCL) shall be equal to or greater than the specific gravities provided in this table. Refer to product information from SCL manufacturer.

Uplift and F2 lateral load values have been adjusted using Hankinson's equation per NDS.

Allowable uplift and lateral loads are applicable for wood framing members having the same published specific gravity. For applications involving members with different specific gravities, use the allowable load corresponding to the lowest specific gravity.

Allowable uplift and lateral loads for applications in which the controlling load duration is two months (i.e., 115%) or seven days (i.e., 125%) may be obtained by multiplying the corresponding tabular value in the column marked *"1.0"* by 1.15 or 1.25, respectively.

6.2.2 Allowable loads along the wall are listed in **Table 3** for the given fastener spacing.

Table 3. Allowable Loads by Fastening Pattern

Wood Species[1]	Specific Gravity[2,3]	Allowable Load (plf)[2,4,5,6] On-Center Spacing Between Fasteners (in)						
		4	6	8	12	16	18	24
Southern Pine	0.55	1,230	820	615	410	310	275	205
Douglas Fir-Larch	0.50	1,155	770	580	385	290	255	195
Spruce Pine-Fir/ Hem-Fir	0.42	1,020	680	510	340	255	225	170

SI: 1 in = 25.4 mm, 1 lb/ft = 0.0146 kN/m

Wood truss and rafter members shall be a minimum of 2" nominal thickness.

A load duration factor of 1.6 has been applied to these tables for wind loading per NDS Table 2.3.2. Adjustments to lower this factor may be made at the engineer's discretion. No further increases are allowed.

Equivalent specific gravity of SCL shall be equal to or greater than the specific gravities provided in this table. Refer to product information from SCL manufacturer.

Allowable uplift and lateral loads are applicable for wood framing members having the same published specific gravity. For applications involving members with different specific gravities, use the allowable load corresponding to the lowest specific gravity. A load duration factor of 1.6 has been applied to these tables for wind loading per NDS Table 2.3.2. Adjustments to lower this factor may be made at the engineer's discretion. No further increases are allowed.

Table values are based on parallel to wall lateral loads.

Interpolation for other fastener spacing is permitted

Confidential Intellectual Property Is protected by Defend Trade Secrets Act 2016, ©DrJ Engineering, LLC

6.2.3 Where it is anticipated that loads will be applied to a single fastener simultaneously in more than one direction, additional evaluation is required to account for the combined effect of these loads using accepted engineering practice.

6.2.3.1 Consult a professional engineer as needed for complex design conditions.

6.3 TimberLOK fasteners are permitted for use in buildings and structures located within High-Velocity Hurricane Zone (HVHZ) regions provided that the fasteners are not exposed to the outdoor environment.

6.4 Where the application falls outside of the performance evaluation, conditions of use, and/or installation requirements set forth herein, alternative techniques shall be permitted in accordance with accepted engineering practice and experience. This includes but is not limited to the following areas of engineering: mechanics or materials, structural, building science, and fire science.

7 Certified Performance[23]

7.1 All construction methods shall conform to accepted engineering practices to ensure durable, livable, and safe construction and shall demonstrate acceptable workmanship reflecting journeyman quality of work of the various trades.[24]

7.2 The strength and rigidity of the component parts and/or the integrated structure shall be determined by engineering analysis or by suitable load tests to simulate the actual loads and conditions of application that occur.[25]

8 Regulatory Evaluation and Accepted Engineering Practice

8.1 TimberLOK fasteners comply with the following legislatively adopted regulations and/or accepted engineering practice for the following reasons:

8.1.1 TimberLOK fasteners were evaluated, using their tested allowable design values, as an alternate means of attaching wood trusses and rafters at gable end walls to the top of the wall below to provide uplift and lateral load resistance. The following conditions were evaluated:

8.1.1.1 Withdrawal strength of TimberLOK fasteners for use as an alternative to toenail connections, metal hurricane and seismic clips/straps, or nails in tension (uplift) loaded applications.

8.1.1.2 Shear strength of TimberLOK fasteners for use as an alternative to toenail connections, hurricane and seismic clips/straps, or nails in shear (lateral) loaded applications either parallel or perpendicular to wood grain.

8.1.1.3 Head pull through strength of TimberLOK fasteners for use as an alternative to toenail connections, hurricane and seismic clips/straps, or nails in tension (uplift) loaded applications.

8.1.1.4 Corrosion resistance in accordance with ASTM B117 (modified with freshwater instead of saltwater exposure) for use as an alternative to fasteners and connectors prescribed in IBC Section 2304.10.6 and IRC Section R317.3.

8.2 Connections other than those addressed in this section are outside the scope of this report.

8.3 Any building code, regulation and/or accepted engineering evaluations (i.e., research reports, duly authenticated reports, etc.) that are conducted for this Listing were performed by DrJ Engineering, LLC (DrJ), an ISO/IEC 17065 accredited certification body and a professional engineering company operated by RDP/approved sources. DrJ is qualified[27] to practice product and regulatory compliance services within its scope of accreditation and engineering expertise, respectively.

8.4 Engineering evaluations are conducted with DrJ's ANAB accredited ICS code scope of expertise, which are also its areas of professional engineering competence.

8.5 Any regulation specific issues not addressed in this section are outside the scope of this report.

Confidential Intellectual Property Is protected by Defend Trade Secrets Act 2016, ©DrJ Engineering, LLC

9 Installation

9.1 Installation shall comply with the approved construction documents, the manufacturer installation instructions, this report, and the applicable building code.

9.2 In the event of a conflict between the manufacturer installation instructions and this report, the more restrictive shall govern.

9.3 *General*

9.3.1 TimberLOK fasteners may be installed without pre-drilling lead holes.

9.3.1.1 Lead holes may be bored in accordance with NDS Section 12.1.5 were wood is prone to splitting.

9.4 *Installation Procedure*

9.4.1 Select a TimberLOK fastener from **Table 1** with a length sufficient to fully embed the 2" threaded portion of the fastener into the wall top plates or wood structural framing member. See **Figure 3** for guidance.

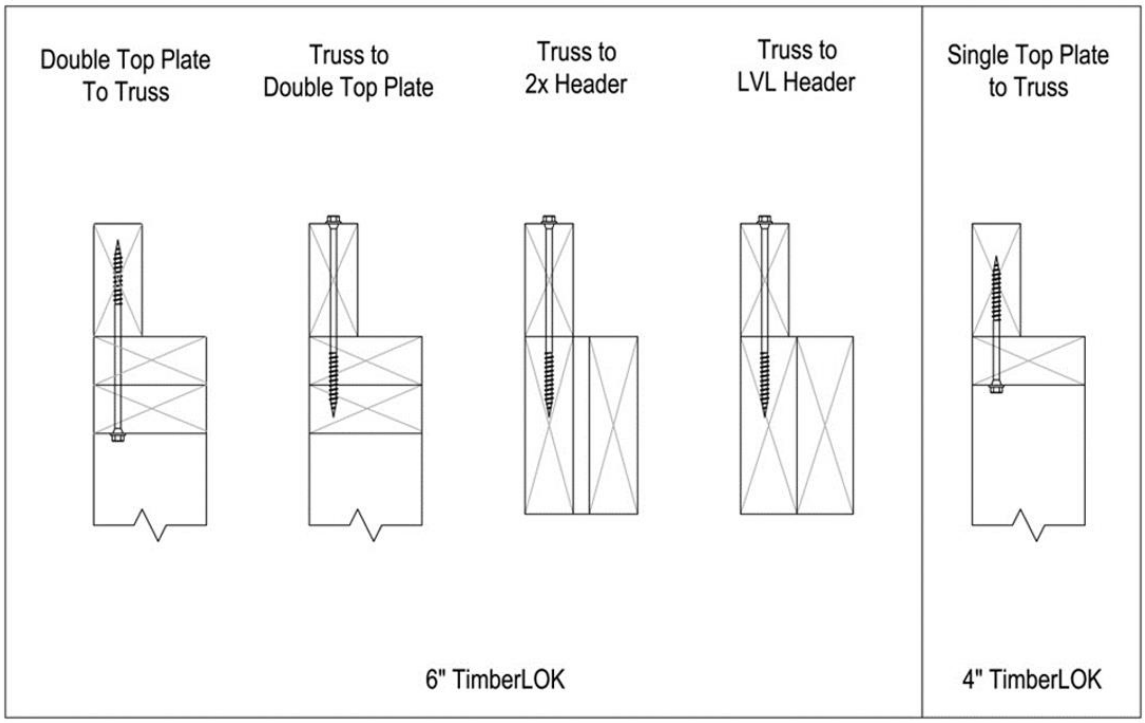

Figure 3. TimberLOK Fastener Applications for Truss Bottom Chord to Wall Framing

9.4.2 Install the required number of fasteners to achieve the required lateral capacity and uplift loads using the TimberLOK design capacities for resistance to the uplift and lateral loads from **Table 2** and **Table 3**.

9.4.3 When installed from the top down, center the screw on the truss chord and drive vertically until the head of the fastener is flush to the top of the chord. Do not overdrive.

9.4.4 When installed upward from the bottom of a single or double top plate, measure $^3/_4$" in from the outer edge of the plate(s) so that the screw is centered on the truss chord (±$^1/_4$") and drive the fastener vertically until the head of the fastener is flush to the underside of the top plate(s). Do not overdrive.

Confidential Intellectual Property Is protected by Defend Trade Secrets Act 2016, ©DrJ Engineering, LLC

10 Substantiating Data

10.1 Testing has been performed under the supervision of a professional engineer and/or under the requirements of ISO/IEC 17025 as follows:

10.1.1 Edge and end distances verification testing in accordance with ASTM 1761

10.1.2 TimberLOK fasteners were evaluated for head pull through and withdrawal for uplift capacity.

10.1.3 Wall assemblies constructed with TimberLOK fasteners were evaluated for structural performance when used as a truss hold down.

10.1.4 Wall assemblies constructed with TimberLOK fasteners were evaluated for structural performance when loaded laterally.

10.2 Information contained herein may include the result of testing and/or data analysis by sources that are approved agencies, approved sources, and/or RDPs. Accuracy of external test data and resulting analysis is relied upon.

10.3 Where applicable, testing and/or engineering analysis are based upon provisions that have been codified into law through state or local adoption of regulations and standards. The developers of these regulations and standards are responsible for the reliability of published content. DrJ's engineering practice may use a regulation-adopted provision as the control. A regulation-endorsed control versus a simulation of the conditions of application to occur establishes a new material as being equivalent to the regulatory provision in terms of quality, strength, effectiveness, fire resistance, durability, and safety.

10.4 The accuracy of the provisions provided herein may be reliant upon the published properties of raw materials, which are defined by the grade mark, grade stamp, mill certificate, or duly authenticated reports from approved agencies and/or approved sources provided by the supplier. These are presumed to be minimum properties and relied upon to be accurate. The reliability of DrJ's engineering practice, as contained in this duly authenticated report, may be dependent upon published design properties by others.

10.5 Testing and engineering analysis: The strength, rigidity, and/or general performance of component parts and/or the integrated structure are determined by suitable tests that simulate the actual conditions of application that occur and/or by accepted engineering practice and experience.[28]

10.6 Where additional condition of use and/or regulatory compliance information is required, please search for TimberLOK on the DrJ Certification website.

11 Findings

11.1 As outlined in **Section 6**, TimberLOK fasteners have performance characteristics that were tested and/or meet applicable regulations and are suitable for use pursuant to its specified purpose.

11.2 When used and installed in accordance with this duly authenticated report and the manufacturer installation instructions, TimberLOK fasteners shall be approved for the following applications:

11.2.1 To provide resistance to uplift loads due to wind negative pressure applied from the gable end truss above, lifting up on the top plate of the wall, per **Table 2**.

11.2.2 To provide resistance to lateral loads due to wind pressure applied parallel or perpendicular to the wall, per **Table 2**.

11.2.3 As an acceptable alternative to toenail connections, metal hurricane and seismic clips/straps or nails, to resist the uplift and lateral loads as provided for in **Table 2**.

Confidential Intellectual Property Is protected by Defend Trade Secrets Act 2016, ©DrJ Engineering, LLC

11.2.4 TimberLOK fasteners with the proprietary coating are approved for use in:

11.2.4.1 Pressure-treated (ACQ) lumber, provided the conditions set forth by the pressure-treated lumber manufacturer be met, including appropriate strength reductions.

11.2.4.2 Fire-retardant treated lumber, provided the conditions set forth by the fire-retardant treated lumber manufacturer be met, including appropriate strength reductions.

11.2.4.3 Areas with exposure to freshwater.

11.2.4.3.1 Allowable loads shall be adjusted with the wet service factor, C_M, where applicable.

11.3 For joist/rafter and truss to top plate connections, see Report Number 1105-02.

11.4 For uplift design of drag strut truss to top plate connections, see Report Number 1306-01.

11.5 For uplift and lateral resistance of wall to rim joist connections, see Report Number 1306-05.

11.6 For top roll resistance of joist/rafter and truss to top plate connections, see Report Number 1308-05.

11.7 Unless exempt by state statute, when TimberLOK fasteners are to be used as a structural and/or building envelope component in the design of a specific building, the design shall be performed by an RDP.

11.8 Any application specific issues not addressed herein can be engineered by an RDP. Assistance with engineering is available from FastenMaster.

11.9 IBC Section 104.11 (IRC Section R104.11 and IFC Section 104.10[29] are similar) in pertinent part states:

> **104.11 Alternative materials, design and methods of construction and equipment.** The provisions of this code are not intended to prevent the installation of any material or to prohibit any design or method of construction not specifically prescribed by this code. Where the alternative material, design or method of construction is not approved, the building official shall respond in writing, stating the reasons the alternative was not approved.

11.10 **Approved**:[30] Building regulations require that the building official shall accept duly authenticated reports.[31]

11.10.1 An approved agency is *"approved"* when it is ANAB ISO/IEC 17065 accredited.

11.10.2 An approved source is *"approved"* when an RDP is properly licensed to transact engineering commerce.

11.10.3 Federal law, Title 18 US Code Section 242, requires that where the alternative product, material, service, design, assembly, and/or method of construction is not approved, the building official shall respond in writing, stating the reasons why the alternative was not approved. Denial without written reason deprives a protected right to free and fair competition in the marketplace.

11.11 DrJ is a licensed engineering company, employs licensed RDPs and is an ANAB-Accredited Product Certification Body – Accreditation #1131.

11.12 Through the IAF Multilateral Agreements (MLA), this duly authenticated report can be used to obtain product approval in any jurisdiction or country because all ANAB ISO/IEC 17065 duly authenticated reports are equivalent.[32]

12 Conditions of Use

12.1 Material properties shall not fall outside the boundaries defined in **Section 6**.

12.2 As defined in **Section 6**, where material and/or engineering mechanics properties are created for load resisting design purposes, the resistance to the applied load shall not exceed the ability of the defined properties to resist those loads using the principles of accepted engineering practice.

12.3 Structural framing members (i.e., wood, masonry, concrete, steel, etc.) connected with TimberLOK fasteners shall be designed in accordance with the requirements of their specific design standards/specifications as referenced in the building code adopted by the jurisdiction in which the project is to be constructed.

12.4 Loads applied shall not exceed those as defined in this report.

Confidential Intellectual Property Is protected by Defend Trade Secrets Act 2016, ©DrJ Engineering, LLC

12.5 Use of TimberLOK fasteners shall be limited to dry service conditions in treated or untreated wood.

12.5.1 Exposure to freshwater water is permitted. Wet service factor shall be applied to the listed allowable values in **Section 6**, as applicable.

12.5.2 Use of TimberLOK fasteners in areas where exposure to saltwater or saltwater spray is outside the scope of this report.

12.6 When required by adopted legislation and enforced by the building official, also known as the authority having jurisdiction (AHJ) in which the project is to be constructed:

12.6.1 Any calculations incorporated into the construction documents shall conform to accepted engineering practice and, when prepared by an approved source, shall be approved when signed and sealed.

12.6.2 This report and the installation instructions shall be submitted at the time of permit application.

12.6.3 This innovative product has an internal quality control program and a third-party quality assurance program.

12.6.4 At a minimum, this innovative product shall be installed per **Section 9** of this report.

12.6.5 The review of this report by the AHJ shall comply with IBC Section 104 and IBC Section 105.4.

12.6.6 This innovative product has an internal quality control program and a third party quality assurance program in accordance with IBC Section 104.4, IBC Section 110.4, IBC Section 1703, IRC Section R104.4, and IRC Section R109.2.

12.6.7 The application of this innovative product in the context of this report is dependent upon the accuracy of the construction documents, implementation of installation instructions, inspection as required by IBC Section 110.3, IRC Section R109.2, and any other regulatory requirements that may apply.

12.7 The approval of this report by the AHJ shall comply with IBC Section 1707.1, where legislation states in part, "*the building official shall accept duly authenticated reports from approved agencies in respect to the quality and manner of use of new material or assemblies as provided for in Section 104.11*," all of IBC Section 104, and IBC Section 105.4.

12.8 Design loads shall be determined in accordance with the regulations adopted by the jurisdiction in which the project is to be constructed and/or by the building designer (i.e., owner or RDP).

12.9 The actual design, suitability, and use of this report for any particular building, is the responsibility of the owner or the authorized agent of the owner.

13 Identification

13.1 The innovative product listed in **Section 1.1** is identified by a label on the board or packaging material bearing the manufacturer name, product name, this report number, and other information to confirm code compliance.

13.2 Additional technical information can be found at www.fastenmaster.com.

14 Review Schedule

14.1 This report is subject to periodic review and revision. For the latest version, visit drjcertification.org.

14.2 For information on the status of this report, please contact DrJ Certification.

15 Approved for Use Pursuant to U.S. and International Legislation Defined in Appendix A

15.1 are included in this report published by an approved agency that is concerned with evaluation of products or services, maintains periodic inspection of the production of listed materials or periodic evaluation of services. This report states either that the material, product, or service meets recognized standards or has been tested and found suitable for a specified purpose. This report meets the legislative intent and definition of being acceptable to the AHJ.

Confidential Intellectual Property Is protected by Defend Trade Secrets Act 2016, ©DrJ Engineering, LLC

Appendix A

1 Legislation that Authorizes AHJ Approval

1.1 **Fair Competition**: State legislatures have adopted Federal regulations for the examination and approval of building code referenced and alternative products, materials, designs, services, assemblies, and/or methods of construction that:

1.1.1 Advance innovation.

1.1.2 Promote competition so all businesses have the opportunity to compete on price and quality in an open market on a level playing field unhampered by anticompetitive constraints.

1.1.3 Benefit consumers through lower prices, better quality, and greater choice.

1.2 **Adopted Legislation**: The following local, state and federal regulations affirmatively authorize this innovative product to be approved by AHJs, delegates of building departments, and/or delegates of an agency of the federal government:

1.2.1 Interstate commerce is governed by the Federal Department of Justice to encourage the use of innovative products, materials, designs, services, assemblies, and/or methods of construction. The goal is to "*protect economic freedom and opportunity by promoting free and fair competition in the marketplace*."

1.2.2 Title 18 US Code Section 242 affirms and regulates the right of individuals and businesses to freely and fairly have new products, materials, designs, services, assemblies, and/or methods of construction approved for use in commerce. Disapproval of alternatives shall be based upon non-conformance with respect to specific provisions of adopted legislation and shall be provided in writing stating the reasons why the alternative was not approved, with reference to the specific legislation violated.

1.2.3 The federal government and each state have a public records act. In addition, each state also has legislation that mimics the federal Defend Trade Secrets Act 2016 (DTSA),[33] where providing test reports, engineering analysis, and/or other related IP/TS is subject to prison of not more than ten years[34] and/or a $5,000,000 fine or 3 times the value of[35] the Intellectual Property (IP) and Trade Secrets (TS).

1.2.3.1 Compliance with public records and trade secret legislation requires approval through the use of Listings, certified reports, Technical Evaluation Reports, duly authenticated reports, and/or research reports prepared by approved agencies and/or approved sources.

1.2.4 For new materials[36] that are not specifically provided for in any regulation, the design strengths and permissible stresses shall be established by tests, where suitable load tests simulate the actual loads and conditions of application that occur.

1.2.5 The design strengths and permissible stresses of any structural material shall conform to the specifications and methods of design using accepted engineering practice.[37]

1.2.6 The commerce of approved sources (i.e., registered PEs) is regulated by professional engineering legislation. Professional engineering commerce shall always be approved by AHJs, except where there is evidence provided in writing, that specific legislation have been violated by an individual registered PE.

1.2.7 The AHJ shall accept duly authenticated reports from approved agencies in respect to the quality and manner of use of new materials or assemblies as provided for in IBC Section 104.11.[38]

Confidential Intellectual Property Is protected by Defend Trade Secrets Act 2016, ©DrJ Engineering, LLC

1.3 **Approved**[39] **by Los Angeles**: The Los Angeles Municipal Code (LAMC) states in pertinent part that the provisions of LAMC are not intended to prevent the use of any material, device, or method of construction not specifically prescribed by LAMC. The Department shall use Part III, Recognized Standards in addition to Part II, Uniform Building Code Standards of Division 35, Article 1, Chapter IX of the LAMC in evaluation of products for approval where such standard exists for the product or the material and may use other approved standards that apply. Whenever tests or certificates of any material or fabricated assembly are required by Chapter IX of the LAMC, such tests or certification shall be made by a testing agency approved by the Superintendent of Building to conduct such tests or provide such certifications. The testing agency shall publish the scope and limitation(s) of the listed material or fabricated assembly.[40] The Superintendent of Building Approved Testing Agency Roster is provided by the Los Angeles Department of Building and Safety (LADBS). The Center for Building Innovation (CBI) Certificate of Approval License is TA24945. Tests and certifications found in a DrJ Listing are LAMC approved. In addition, the Superintendent of Building shall accept duly authenticated reports from approved agencies in respect to the quality and manner of use of new materials or assemblies as provided for in the California Building Code (CBC) Section 1707.1.[41]

1.4 **Approved by Chicago**: The Municipal Code of Chicago (MCC) states in pertinent part that an Approved Agency is a Nationally Recognized Testing Laboratory (NRTL) acting within its recognized scope and/or a certification body accredited by the American National Standards Institute (ANSI) acting within its accredited scope. Construction materials and test procedures shall conform to the applicable standards listed in the MCC. Sufficient technical data shall be submitted to the building official to substantiate the proposed use of any product, material, service, design, assembly, and/or method of construction not specifically provided for in the MCC. This technical data shall consist of research reports from approved sources (i.e., MCC defined Approved Agencies).

1.5 **Approved by New York City**: The 2022 NYC Building Code (NYCBC) states in part that an approved agency shall be deemed[42] an approved testing agency via ISO/IEC 17025 accreditation, an approved inspection agency via ISO/IEC 17020 accreditation, and an approved product evaluation agency via ISO/IEC 17065 accreditation. Accrediting agencies, other than federal agencies, must be members of an internationally recognized cooperation of laboratory and inspection accreditation bodies subject to a mutual recognition agreement[43] (i.e., ANAB, International Accreditation Forum also known as IAF, etc.).

1.6 **Approved by Florida**: Statewide approval of products, methods or systems of construction shall be approved, without further evaluation by:

1.6.1 A certification mark or listing of an approved certification agency,

1.6.2 A test report from an approved testing laboratory,

1.6.3 A product evaluation report based upon testing or comparative or rational analysis, or a combination thereof, from an approved product evaluation entity, or

1.6.4 A product evaluation report based upon testing, comparative or rational analysis, or a combination thereof, developed, signed, and sealed by a professional engineer or architect, licensed in Florida.

1.6.5 For local product approval, products or systems of construction shall demonstrate compliance with the structural wind load requirements of the Florida Building Code (FBC) through one of the following methods:

1.6.5.1 A certification mark, listing, or label from a commission-approved certification agency indicating that the product complies with the code,

1.6.5.2 A test report from a commission-approved testing laboratory indicating that the product tested complies with the code,

1.6.5.3 A product-evaluation report based upon testing, comparative or rational analysis, or a combination thereof, from a commission-approved product evaluation entity which indicates that the product evaluated complies with the code,

Confidential Intellectual Property Is protected by Defend Trade Secrets Act 2016, ©DrJ Engineering, LLC

1.6.5.4 A product-evaluation report or certification based upon testing or comparative or rational analysis, or a combination thereof, developed and signed and sealed by a Florida professional engineer or Florida registered architect, which indicates that the product complies with the code, or

1.6.5.5 A statewide product approval issued by the Florida Building Commission.

1.6.6 The Florida Department of Business and Professional Regulation (DBPR) website provides a listing of companies certified as a Product Evaluation Agency (i.e., EVLMiami 13692), a Product Certification Agency (i.e., CER10642), and as a Florida Registered Engineer (i.e., ANE13741).

1.7 **Approved by Miami-Dade County (i.e., Notice of Acceptance [NOA])**: A Florida statewide approval is an NOA. An NOA is a Florida local product approval. By Florida law, Miami-Dade County shall accept the statewide and local Florida Product Approval as provided for in Florida legislation 553.842 and 553.8425.

1.8 **Approved by New Jersey**: Pursuant to the 2018 Building Code of New Jersey in IBC Section 1707.1 General,[44] it states: "*In the absence of approved rules or other approved standards, the building official shall accept duly authenticated reports from approved agencies in respect to the quality and manner of use of new materials or assemblies as provided for in the administrative provisions of the Uniform Construction Code (N.J.A.C. 5:23)*".[45] Furthermore N.J.A.C 5:23-3.7 states: "*Municipal approvals of alternative materials, equipment, or methods of construction*."

1.8.1 **Approvals**: Alternative materials, equipment, or methods of construction shall be approved by the appropriate subcode official provided the proposed design is satisfactory and that the materials, equipment, or methods of construction are suitable for the intended use and are at least the equivalent in quality, strength, effectiveness, fire resistance, durability, and safety of those conforming with the requirements of the regulations.

1.8.1.1 A field evaluation label and report or letter issued by a nationally recognized testing laboratory verifying that the specific material, equipment, or method of construction meets the identified standards or has been tested and found to be suitable for the intended use, shall be accepted by the appropriate subcode official as meeting the requirements of the above.

1.8.1.2 Reports of engineering findings issued by nationally recognized evaluation service programs such as but not limited to, the Building Officials and Code Administrators (BOCA), the International Conference of Building Officials (ICBO), the Southern Building Code Congress International (SBCCI), the International Code Council (ICC), and the National Evaluation Service, Inc., shall be accepted by the appropriate subcode official as meeting the requirements of the above.

1.8.2 The New Jersey Department of Community Affairs has confirmed that technical evaluation reports, from any accredited entity listed by ANAB, meets the requirements of item the previous paragraph, given that the listed entities are no longer in existence and/or do not provide "*reports of engineering findings*."

1.9 **Approved by the Code of Federal Regulations Manufactured Home Construction and Safety Standards**: Pursuant to Title 24, Subtitle B, Chapter XX, Part 3282.14[46] and Part 3280,[47] the Department encourages innovation and the use of new technology in manufactured homes. The design and construction of a manufactured home shall conform to the provisions of Part 3282 and Part 3280 where key approval provisions in mandatory language follow:

1.9.1 *"All construction methods shall be in conformance with accepted engineering practices."*

1.9.2 *"The strength and rigidity of the component parts and/or the integrated structure shall be determined by engineering analysis or by suitable load tests to simulate the actual loads and conditions of application that occur."*

1.9.3 *"The design stresses of all materials shall conform to accepted engineering practice."*

Confidential Intellectual Property Is protected by Defend Trade Secrets Act 2016, ©DrJ Engineering, LLC

1.10 **Approval by US, Local and State Jurisdictions in General**: In all other local and state jurisdictions, the adopted building code legislation states in pertinent part that:

1.10.1 For new materials that are not specifically provided for in this code, the design strengths and permissible stresses shall be established by tests.[48]

1.10.2 For innovative alternatives and/or methods of construction, the building official shall accept duly authenticated reports from approved agencies with respect to the quality and manner of use of new materials or assemblies.[49]

1.10.2.1 An approved agency is *"approved"* when it is ANAB ISO/IEC 17065 accredited. DrJ Engineering, LLC (DrJ) is in the ANAB directory.

1.10.2.2 An approved source is *"approved"* when an RDP is properly licensed to transact engineering commerce. The regulatory authority governing approved sources is the state legislature via its professional engineering regulations.[50]

1.10.3 The design strengths and permissible stresses of any structural material…shall conform to the specifications and methods of design of accepted engineering practice performed by an approved source.[51]

1.11 **Approval by International Jurisdictions**: The USMCA and GATT agreements provide for approval of innovative materials, designs, services, and/or methods of construction through the Agreement on Technical Barriers to Trade and the IAF Multilateral Recognition Arrangement (MLA), where these agreements:

1.11.1 State that conformity assessment procedures (i.e., ISO/IEC 17020, 17025, 17065, etc.) are prepared, adopted, and applied so as to grant access for suppliers of like products originating in the territories of other Members under conditions no less favourable than those accorded to suppliers of like products of national origin or originating in any other country, in a comparable situation.

1.11.2 **Approved**: The purpose of the MLA is to ensure mutual recognition of accredited certification and validation/verification statements between signatories to the MLA and subsequently, acceptance of accredited certification and validation/verification statements in many markets based on one accreditation for the timely approval of innovative materials, designs, services, and/or methods of construction.

1.11.3 ANAB is an IAF-MLA signatory where recognition of certificates, validation, and verification statements issued by conformity assessment bodies accredited by all other signatories of the IAF MLA, with the appropriate scope, shall be approved.[52]

1.11.4 Therefore, all ANAB ISO/IEC 17065 duly authenticated reports are approval equivalent.[53]

1.12 Approval equity is a fundamental commercial and legal principle.[54]

Confidential Intellectual Property Is protected by Defend Trade Secrets Act 2016, ©DrJ Engineering, LLC

Issue Date: March 26, 2025

Subject to Renewal: April 1, 2027

FBC Supplement to Report Number 1304-02

REPORT HOLDER: FastenMaster

1 Evaluation Subject

1.1 FastenMaster TimberLOK Heavy Duty Wood Screws

2 Purpose and Scope

2.1 Purpose

2.1.1 The purpose of this Report Supplement is to show FastenMaster TimberLOK Heavy Duty Wood Screws, recognized in Report Number 1304-02, have also been evaluated for compliance with the codes listed below as adopted by the Florida Building Commission.

2.2 *Applicable Code Editions*

2.2.1 FBC-B—20, 23: Florida Building Code – Building FL47410

2.2.2 *FBC-R—20, 23: Florida Building Code – Residential FL47410*

3 Conclusions

3.1 FastenMaster TimberLOK Heavy Duty Wood Screws, described in Report Number 1304-02, comply with the FBC-B and FBC-R and are subject to the conditions of use described in this supplement.

3.2 Where there are variations between the IBC and IRC and the FBC-B and FBC-R applicable to this report, they are listed here:

3.2.1 FBC-B Section 104.4, Section 110.4, Section 1613, and Section 2308 are reserved.

3.2.2 FBC-R Section R104, Section R109, Section R301.2.2 and Section R602.3.2 are reserved.

3.2.3 FBC-B Section 2304.10.5 replaces IBC Section 2304.10.6.

4 Conditions of Use

4.1 FastenMaster TimberLOK Heavy Duty Wood Screws, described in Report Number 1304-02, must comply with all of the following conditions:

4.1.1 All applicable sections in Report Number 1304-02.

4.2 The design, installation, and inspections are in accordance with additional requirements of FBC-B Chapter 16 and Chapter 17, as applicable.

Confidential Intellectual Property Is protected by Defend Trade Secrets Act 2016, ©DrJ Engineering, LLC

Notes

1 For more information, visit drjcertification.org or call us at 608-310-6748.

2 2018 IBC Section 2304.10.5

3 https://up.codes/viewer/wyoming/ibc-2021/chapter/17/special-inspections-and-tests#1702

4 Alternative Materials, Design and Methods of Construction and Equipment: The provisions of any regulation code are not intended to prevent the installation of any material or to prohibit any design or method of construction not specifically prescribed by a regulation. Please review https://www.justice.gov/atr/mission and https://up.codes/viewer/colorado/ibc-2021/chapter/1/scope-and-administration#104.11

5 https://up.codes/viewer/wyoming/ibc-2021/chapter/17/special-inspections-and-tests#1706:~:text=the%20design%20strengths%20and%20permissible%20stresses%20shall%20be%20established%20by%20tests%20as

6 The design strengths and permissible stresses of any structural material shall conform to the specifications and methods of design of accepted engineering practice. https://up.codes/viewer/wyoming/ibc-2021/chapter/17/special-inspections-and-tests#1706:~:text=shall%20conform%20to%20the%20specifications%20and%20methods%20of%20design%20of%20accepted%20engineering%20practice

7 https://up.codes/viewer/wyoming/ibc-2021/chapter/17/special-inspections-and-tests#1707.1:~:text=the%20building%20official%20shall%20accept%20duly%20authenticated%20reports%20from%20approved%20agencies

8 https://up.codes/viewer/wyoming/ibc-2021/chapter/17/special-inspections-and-tests#1703.4.2

9 https://up.codes/viewer/wyoming/ibc-2021/chapter/2/definitions#approved_agency

10 https://up.codes/viewer/wyoming/ibc-2021/chapter/2/definitions#approved_source

11 https://www.law.cornell.edu/uscode/text/18/1832 (b) Any organization that commits any offense described in subsection (a) shall be fined not more than the greater of $5,000,000 or 3 times the value of the stolen trade secret to the organization, including expenses for research and design and other costs of reproducing the trade secret that the organization has thereby avoided. The federal government and each state have a public records act. To follow DTSA and comply state public records and trade secret legislation requires approval through ANAB ISO/IEC 17065 accredited certification bodies or approved sources. For more information, please review this website: Intellectual Property and Trade Secrets.

12 https://www.nspe.org/resources/issues-and-advocacy/professional-policies-and-position-statements/regulation-professional AND https://apassociation.org/list-of-engineering-boards-in-each-state-archive/

13 https://www.cbitest.com/accreditation/

14 https://up.codes/viewer/colorado/ibc-2021/chapter/1/scope-and-administration#104:~:text=to%20enforce%20the%20provisions%20of%20this%20code

15 https://up.codes/viewer/colorado/ibc-2021/chapter/1/scope-and-administration#104.11:~:text=Where%20the%20alternative%20material%2C%20design%20or%20method%20of%20construction%20is%20not%20approved%2C%20the%20building%20official%20shall%20respond%20in%20writing%2C%20stating%20the%20reasons%20why%20the%20alternative%20was%20not%20approved AND https://up.codes/viewer/colorado/ibc-2021/chapter/1/scope-and-administration#105.3.1:~:text=If%20the%20application%20or%20the%20construction%20documents%20do%20not%20conform%20to%20the%20requirements%20of%20pertinent%20laws%2C%20the%20building%20official%20shall%20reject%20such%20application%20in%20writing%2C%20stating%20the%20reasons%20therefore

16 https://up.codes/viewer/colorado/ibc-2021/chapter/17/special-inspections-and-tests#1707.1:~:text=the%20building%20official%20shall%20accept%20duly%20authenticated%20reports%20from%20approved%20agencies%20in%20respect%20to%20the%20quality%20and%20manner%20of%20use%20of%20new%20materials%20or%20assemblies%20as%20provided%20for%20in%20Section%20104.11

17 https://iaf.nu/en/about-iaf-mla/#:~:text=it%20is%20required%20to%20recognise%20certificates%20and%20validation%20and%20verification%20statements%20issued%20by%20conformity%20assessment%20bodies%20accredited%20by%20all%20other%20signatories%20of%20the%20IAF%20MLA%2C%20with%20the%20appropriate%20scope

18 True for all ANAB accredited product evaluation agencies and all International Trade Agreements.

19 https://www.justice.gov/crt/deprivation-rights-under-color-law AND https://www.justice.gov/atr/mission

20 Unless otherwise noted, all references in this Listing are from the 2021 version of the codes and the standards referenced therein. This material, product, design, service and/or method of construction also complies with the 2000-2021 versions of the referenced codes and the standards referenced therein.

21 All references to the FBC-B and FBC-R are the same as the 2021 IBC and 2021 IRC unless otherwise noted in the Florida Supplement at the end of this report.

22 https://www.ecfr.gov/current/title-24/subtitle-B/chapter-XX/part-3280#p-3280.2(Listed%20or%20certified); https://up.codes/viewer/colorado/ibc-2021/chapter/2/definitions#listed AND https://up.codes/viewer/colorado/ibc-2021/chapter/2/definitions#labeled

23 https://up.codes/viewer/colorado/ibc-2021/chapter/17/special-inspections-and-tests#1703.4

24 https://www.ecfr.gov/current/title-24/subtitle-B/chapter-XX/part-3280#:~:text=All%20construction%20methods%20shall%20be%20in%20conformance%20with%20accepted%20engineering%20practices%20to%20insure%20durable%2C%20livable%2C%20and%20safe%20housing%20and%20shall%20demonstrate%20acceptable%20workmanship%20reflecting%20journeyman%20quality%20of%20work%20of%20the%20various%20trades

25 https://www.ecfr.gov/current/title-24/subtitle-B/chapter-XX/part-3280#:~:text=The%20strength%20and%20rigidity%20of%20the%20component%20parts%20and/or%20the%20integrated%20structure%20shall%20be%20determined%20by%20engineering%20analysis%20or%20by%20suitable%20load%20tests%20to%20simulate%20the%20actual%20loads%20and%20conditions%20of%20application%20that%20occur

26 2018 IBC Section 2304.10.5

27 Qualification is performed by a legislatively defined Accreditation Body. ANSI National Accreditation Board (ANAB) is the largest independent accreditation body in North America and provides services in more than 75 countries. DrJ is an ANAB accredited product certification body.

28 See Code of Federal Regulations (CFR) Title 24 Subtitle B Chapter XX Part 3280 for definition.

29 2018 IFC Section 104.9

30 Approved is an adjective that modifies the noun after it. For example, Approved Agency means that the Agency is accepted officially as being suitable in a particular situation. This example conforms to IBC/IRC/IFC Section 201.4 where the building code authorizes sentences to have an ordinarily accepted meaning such as the context implies.

Confidential Intellectual Property Is protected by Defend Trade Secrets Act 2016, ©DrJ Engineering, LLC

31 https://up.codes/viewer/wyoming/ibc-2021/chapter/17/special-inspections-and-tests#1707.1

32 Multilateral approval is true for all ANAB accredited product evaluation agencies and all International Trade Agreements.

33 http://www.drjengineering.org/AppendixC AND https://www.drjcertification.org/cornell-2016-protection-trade-secrets

34 https://www.law.cornell.edu/uscode/text/18/1832#:~:text=imprisoned%20not%20more%20than%2010%20years

35 https://www.law.cornell.edu/uscode/text/18/1832#:~:text=Any%20organization%20that,has%20thereby%20avoided

36 https://up.codes/viewer/wyoming/ibc-2021/chapter/17/special-inspections-and-tests#1706.2

37 IBC 2021, Section 1706.1 Conformance to Standards

38 IBC 2021, Section 1707 Alternative Test Procedure, 1707.1 General

39 See **Section 11** for the distilled building code definition of **Approved**.

40 Los Angeles Municipal Code, SEC. 98.0503. TESTING AGENCIES

41 https://up.codes/viewer/california/ca-building-code-2022/chapter/17/special-inspections-and-tests#1707.1

42 New York City, The Rules of the City of New York, § 101-07 Approved Agencies

43 New York City, The Rules of the City of New York, § 101-07 Approved Agencies

44 https://up.codes/viewer/new_jersey/ibc-2018/chapter/17/special-inspections-and-tests#1707.1

45 https://www.nj.gov/dca/divisions/codes/codreg/ucc.html

46 https://www.ecfr.gov/current/title-24/subtitle-B/chapter-XX/part-3282/subpart-A/section-3282.14

47 https://www.ecfr.gov/current/title-24/subtitle-B/chapter-XX/part-3280

48 IBC 2021, Section 1706 Design Strengths of Materials, 1706.2 New Materials. Adopted law pursuant to IBC model code language 1706.2.

49 IBC 2021, Section 1707 Alternative Test Procedure, 1707.1 General. Adopted law pursuant to IBC model code language 1707.1.

50 https://www.nspe.org/resources/issues-and-advocacy/professional-policies-and-position-statements/regulation-professional AND https://apassociation.org/list-of-engineering-boards-in-each-state-archive/

51 IBC 2021, Section 1706 Design Strengths of Materials, Section 1706.1 Conformance to Standards Adopted law pursuant to IBC model code language 1706.1.

52 https://iaf.nu/en/about-iaf-mla/#:~:text=it%20is%20required%20to%20recognise%20certificates%20and%20validation%20and%20verification%20statements%20issued%20by%20conformity%20assessment%20bodies%20accredited%20by%20all%20other%20signatories%20of%20the%20IAF%20MLA%2C%20with%20the%20appropriate%20scope

53 True for all ANAB accredited product evaluation agencies and all International Trade Agreements.

54 https://www.justice.gov/crt/deprivation-rights-under-color-law AND https://www.justice.gov/atr/mission

Confidential Intellectual Property Is protected by Defend Trade Secrets Act 2016, ©DrJ Engineering, LLC