Listing and Technical Evaluation Report™

A Duly Authenticated Report from an Approved Agency

Report No: 2210-01

Issue Date: February 27, 2025

Revision Date: February 28, 2025

Subject to Renewal: April 1, 2027

Slotted-Z® with ROCKETStick®

Trade Secret Report Holder:

Cladiator®

Phone: 800-917-6237 Website: www.cladiator.com Email: info@cladiator.com

CSI Designations:

DIVISION: 07 00 00 - THERMAL AND MOISTURE PROTECTION

Section: 07 20 00 - Thermal Protection Section: 07 21 00 - Thermal Insulation Section: 07 48 00 - Exterior Wall Assemblies

1 Innovative Product Evaluated[1]

1.1 Slotted-Z

Kirk Grundahl Digitally signed by Kirk Grundahl DN: C=US, E=kgrundahl@qualtim.com, O=Qualtim, CN=Kirk Grundahl Date: 2025.03.06 07:56:58-06'00'

KIRK H. GRUNDAHL LICENSE No. 73618 STATE OF FLORIDA PROFESSIONAL ENGINEER

March 06, 2025

2 Product Description and Materials

2.1 The innovative product evaluated in this report is shown in **Figure 1** and **Figure 2**.

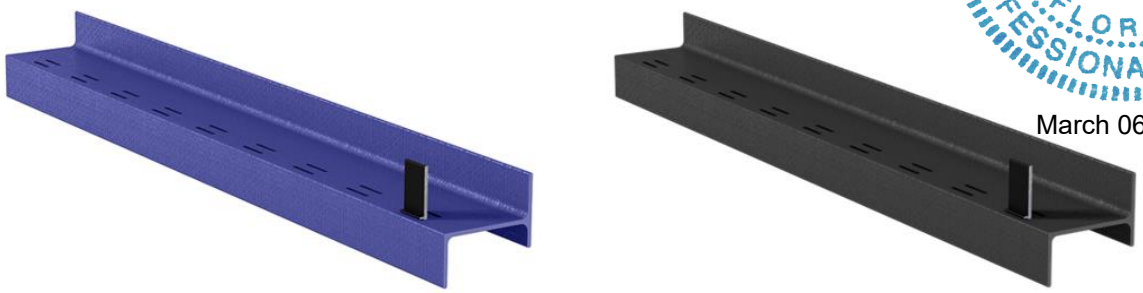

Figure 1. Slotted-Z (Purple and Black) with ROCKETStick

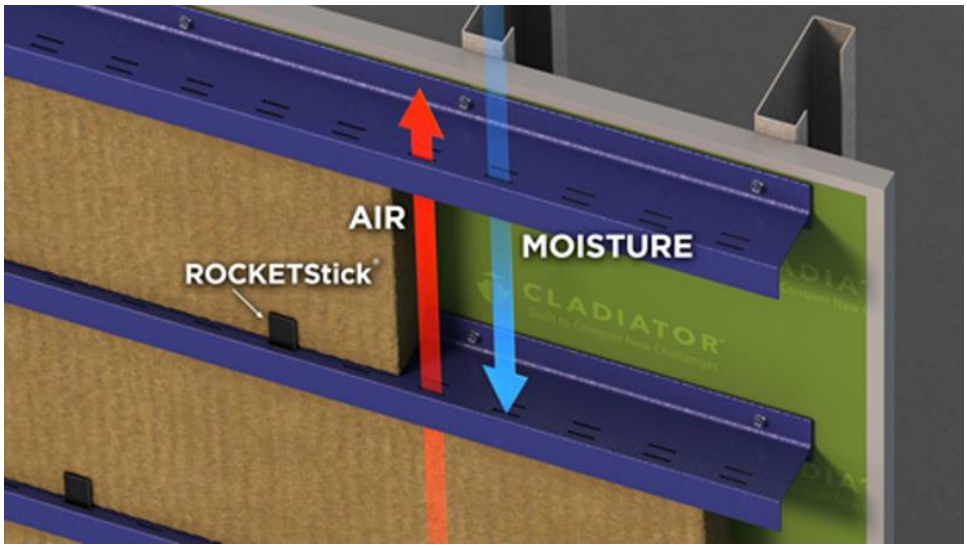

Figure 2. Slotted-Z with ROCKETStick Application

2.2 Slotted-Z is used as part of a cladding attachment system and is manufactured from pultruded Fiber-Reinforced Polymer (FRP).

2.2.1 Slotted-Z may be used when cladding is installed over insulation as a continuous insulation, thermally broken sub-framing system that provides structural performance while achieving rain-screen principles such as air and moisture ventilation as shown in **Figure 2**.

2.2.1.1 Thermal break provided by the thermally efficient FRP material.

2.2.1.2 Slots along the web promote ventilation (air and moisture) reducing risk of condensation, mold, and rot.

2.2.2 Use in combination with the ROCKETStick to secure insulation without disrupting the weather-resistive barrier by reducing penetrations to the weather-resistive barrier layer.

2.2.2.1 Slotted-Z has two rows of slots along the web to accommodate different insulation depth and airflow.

2.3 *Material Availability*

2.3.1 Slotted-Z is available in Purple or Black as shown in **Figure 1**.

2.3.2 Slotted-Z is available to accommodate insulation depths from $1^1/_2$" through 6" (increasing in $^1/_2$" increments). This depth refers to the distance between the interior sides of the flanges.

2.3.2.1 Dimensions for the different variants of Slotted-Z are provided in **Table 1**.

Table 1. Slotted-Z Dimensions

Slotted-Z Depth (in)	Insulation Thickness (in)	Screw Flange Thickness, A[1] (in)	Web Thickness, B[1] (in)	Wall Flange Thickness, C[1] (in)
1 1/2	1, 1 1/2	0.250	0.160	0.200
2	1, 1 1/2, 2	0.250	0.160	0.200
2 1/2	1 1/2, 2, 2 1/2	0.250	0.160	0.200
3	2, 2 1/2, 3	0.250	0.160	0.200
3 1/2	2 1/2, 3, 3 1/2	0.250	0.160	0.200
4	3, 3 1/2, 4	0.250	0.160	0.200
4 1/2	3 1/2, 4, 4 1/2	0.250	0.160	0.200
5	4, 4 1/2, 5	0.250	0.250	0.250
5 1/2	4 1/2, 5, 5 1/2	0.250	0.250	0.250
6	5, 5 1/2, 6	0.250	0.250	0.250

SI: 1 in = 25.4 mm

1. See **Figure 3** for location.

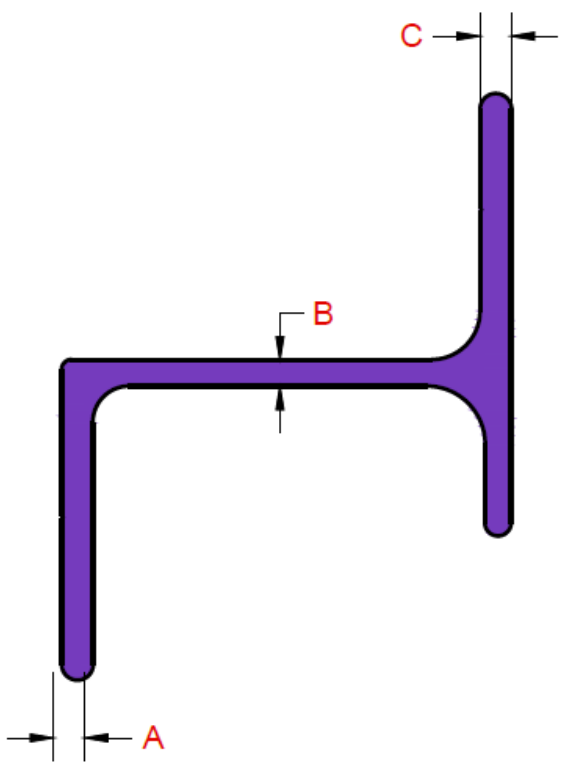

Figure 3. Legend for Slotted-Z Dimensions Table

2.3.3 Consistent among all Slotted-Z variants, dimensions for the ROCKETStick are shown in **Figure 4**.

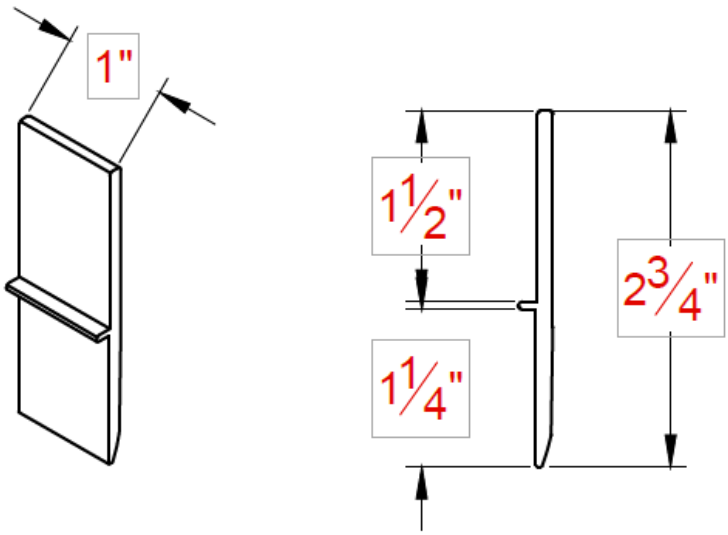

Figure 4. ROCKETStick Dimensions

2.4 As needed, review material properties for design in **Section 6** and the regulatory evaluation in **Section 8**.

3 Definitions

3.1 New Materials[2] are defined as building materials, equipment, appliances, systems, or methods of construction not provided for by prescriptive and/or legislatively adopted regulations, known as alternative materials.[3] The design strengths and permissible stresses shall be established by tests[4] and/or engineering analysis.[5]

3.2 Duly authenticated reports[6] and research reports[7] are test reports and related engineering evaluations, which are written by an approved agency[8] and/or an approved source.[9]

3.2.1 These reports contain intellectual property and/or trade secrets, which are protected by the Defend Trade Secrets Act (DTSA).[10]

3.3 An approved agency is *"approved"* when it is ANAB ISO/IEC 17065 accredited. DrJ Engineering, LLC (DrJ) is listed in the ANAB directory.

3.4 An approved source is *"approved"* when a professional engineer (i.e., Registered Design Professional) is properly licensed to transact engineering commerce. The regulatory authority governing approved sources is the state legislature via its professional engineering regulations.[11]

3.5 Testing and/or inspections conducted for this duly authenticated report were performed by an ISO/IEC 17025 accredited testing laboratory, an ISO/IEC 17020 accredited inspection body, and/or a licensed Registered Design Professional (RDP).

3.5.1 The Center for Building Innovation (CBI) is ANAB[12] ISO/IEC 17025 and ISO/IEC 17020 accredited.

3.6 The regulatory authority shall enforce[13] the specific provisions of each legislatively adopted regulation. If there is a non-conformance, the specific regulatory section and language of the non-conformance shall be provided in writing[14] stating the nonconformance and the path to its cure.

3.7 The regulatory authority shall accept duly authenticated reports from an approved agency and/or an approved source with respect to the quality and manner of use of new materials or assemblies as provided for in regulations regarding the use of alternative materials, designs, or methods of construction.[15]

3.8 ANAB is an International Accreditation Forum (IAF) Multilateral Recognition Arrangement (MLA) signatory where recognition of certificates, validation and verification statements issued by conformity assessment bodies accredited by all other signatories of the IAF MLA with the appropriate scope, shall be approved.[16] Therefore, all ANAB ISO/IEC 17065 duly authenticated reports are approval equivalent.[17]

3.9 Approval equity is a fundamental commercial and legal principle.[18]

4 Applicable Standards for the Listing; Regulations for the Regulatory Evaluation[19]

4.1 *Standards*

4.1.1 *ASCE/SEI 7: Minimum Design Loads and Associated Criteria for Buildings and Other Structures*

4.1.2 *ASTM D635: Standard Test Method for Rate of Burning and/or Extent and Time of Burning of Plastics in a Horizontal Position*

4.1.3 *ASTM D638: Standard Test Method for Tensile Properties of Plastics*

4.1.4 *ASTM D695: Standard Test Method for Compressive Properties of Rigid Plastics*

4.1.5 *ASTM D790: Standard Test Methods for Flexural Properties of Unreinforced and Reinforced Plastics and Electrical Insulating Materials*

4.1.6 *ASTM D1761: Standard Test Methods for Mechanical Fasteners in Wood*

4.1.7 *ASTM D4762: Standard Guide for Testing Polymer Matrix Composite Materials*

4.1.8 *ASTM D5961: Standard Test Method for Bearing Response of Polymer Matrix Composite Laminates*

4.1.9 *ASTM D7332: Standard Test Method for Measuring the Fastener Pull-Through Resistance of a Fiber Reinforced Polymer Matrix Composite*

4.1.10 *ASTM E72: Standard Test Methods of Conducting Strength Tests of Panels for Building Construction*

4.1.11 *ASTM E84: Standard Test Method for Surface Burning Characteristics of Building Materials*

4.1.12 *ASTM E283: Standard Test Method for Determining Rate of Air Leakage Through Exterior Windows, Skylights, Curtain Walls, and Doors Under Specified Pressure Differences Across the Specimen*

4.1.13 *ASTM E330: Standard Test Method for Structural Performance of Exterior Windows, Doors, Skylights and Curtain Walls by Uniform Static Air Pressure Difference*

4.1.14 *ASTM E331: Standard Test Method for Water Penetration of Exterior Windows, Skylights, Doors, and Curtain Walls by Uniform Static Air Pressure Difference*

4.1.15 *CAN/ULC S134: Standard Method of Fire Test of Exterior Wall Assemblies*

4.1.16 *NFPA 285: Standard Fire Test Method for the Evaluation of Fire Propagation Characteristics of Exterior Wall Assemblies Containing Combustible Components*

4.2 *Regulations*

4.2.1 *IBC – 15, 18, 21: International Building Code®*

4.2.2 *IRC – 15, 18, 21: International Residential Code®*

4.2.3 *IECC – 15, 18, 21; International Energy Conservation Code®*

4.2.4 *CBC—19, 22: California Building Code (Title 24, Part 2)*

4.2.5 *CRC—19, 22: California Residential Code (Title 24, Part 2.5)*

4.2.6 *FBC-B—20, 23: Florida Building Code – Building*[20]

4.2.7 *FBC-R—20, 23: Florida Building Code – Residential*[20]

5 Listed[21]

5.1 Equipment, materials, products, or services included in a List published by a nationally recognized testing laboratory (i.e., CBI), approved agency (i.e., CBI and DrJ), and/or approved source (i.e., DrJ), or other organization concerned with product evaluation (i.e., DrJ) that maintains periodic inspection (i.e., CBI) of production of listed equipment or materials, and whose listing states either that the equipment or material meets nationally recognized standards or has been tested and found suitable for use in a specified manner.

6 Tabulated Properties Generated from Nationally Recognized Standards

6.1 *General*

6.1.1 Slotted-Z may be installed over substrates including cold-formed steel, masonry, or concrete.

6.1.2 Slotted-Z is used in buildings constructed in accordance with IBC/IRC requirements for Type I-V construction.

6.1.3 Slotted-Z provides the following when used to attach exterior cladding to the building envelope:

6.1.3.1 Transverse load resistance

6.1.3.2 Thermal resistance, providing a thermal break between the cladding and wall framing

6.1.3.3 Gravity load resistance for the weight of cladding materials

6.2 *Connection Properties*

6.2.1 Allowable withdrawal strength, head-pull-through resistance and dowel bearing strength for the following fasteners when installed into Slotted-Z are provided in **Table 2**.

6.2.1.1 #8 Wafer Head DRIVALL® self-drilling screw manufactured by Grabber® Construction Products, Inc.

6.2.1.2 #10 Hex-Washer Head (HWH) self-drilling screw manufactured by Teks®.

6.2.1.3 #12 JT3-6-5.5/JT3-6-6.3 stainless steel bi-met self-drilling screw manufactured by EJOT® UK Ltd.

6.2.1.4 #14 HWH self-drilling screw manufactured by Teks.

Table 2. Allowable Fastener Properties when Installed into Slotted-Z[1]

Fastener Size	Withdrawal (lb)	Head-Pull-Through (lb)	Dowel Bearing (lb)
#8 Wafer Head DRIVALL Self-Drilling Screw	125	430	205
#10 HWH Self-Drilling Screw	215	360	340
#12 JT3-6-5.5/JT3-6-6.3 Stainless Steel Bi-Met Self-Drilling Screw	230	405	385
#14 HWH Self-Drilling Screw	290	550	480

SI: 1 lb = 4.45 N

1. Applicable when installed into a side flange, nominally 1/4" thick.

6.3 *Cladding Connection*

6.3.1 Slotted-Z may be installed horizontally or vertically on the exterior side of stud-framed walls.

6.3.2 Allowable wind loads for both plaster/stucco finishes (L/360) and brittle finishes (L/240) per IBC Section 1604.3 based on various cladding weights when installed in the horizontal orientation are shown in **Table 3** through **Table 14**.

6.3.2.1 The fastener used for the development of **Table 3** through **Table 14** is the #14 HWH self-drilling screw listed in **Table 3**.

Table 3. Maximum Design Wind Pressure for Slotted-Z – $1^1/_2$" Depth, Horizontal Orientation[1,2,3]

Stud Spacing (in o.c.)	Cladding Screw Spacing (in o.c.)	Slotted-Z Girt Spacing (in o.c.)	Deflection Criteria						
			L/360	L/240					
			Cladding Weight (psf)						
			0	3	5	7	9	10	15
16	16	16	203	199	196	193	190	188	181
		24	136	131	128	125	122	121	113
		32	102	97	94	91	88	87	79
		36	90	86	83	80	77	75	68
		48	68	63	60	57	54	53	-
	24	16	136	131	128	125	122	121	113
		24	90	86	83	80	77	75	68
		32	68	63	60	57	54	53	45
		36	60	56	53	50	47	45	38
		48	45	41	38	35	32	30	-
24	16	16	136	131	128	125	122	121	113
		24	90	86	83	80	77	75	68
		32	68	63	60	57	54	53	45
		36	60	56	53	50	47	45	27
		48	45	41	38	35	32	30	-
	24	16	136	131	128	125	122	121	113
		24	90	86	83	80	77	75	68
		32	68	63	60	57	54	53	45
		36	60	56	53	50	47	45	27
		48	45	41	38	35	32	30	-

SI: 1 in = 25.4 mm, 1 lb = 4.45 N

1. Capacity of the connection at the inner flange and wall assembly is assumed to be controlled by head-pull-through.
2. Based on #14 HWH self-drilling screw.

3. Non-numbered cells (-) indicate that the configuration is not permitted.

Table 4. Maximum Design Wind Pressure for Slotted-Z – 2″ Depth, Horizontal Orientation[1,2,3]

Stud Spacing (in o.c.)	Cladding Screw Spacing (in o.c.)	Slotted-Z Girt Spacing (in o.c.)	Deflection Criteria						
			L/360	L/240					
			Cladding Weight (psf)						
			0	3	5	7	9	10	15
16	16	16	203	199	196	193	190	188	181
		24	136	131	128	125	122	121	113
		32	102	97	94	91	88	87	70
		36	90	86	83	80	77	75	15
		48	68	63	60	57	54	47	-
	24	16	136	131	128	125	122	121	113
		24	90	86	83	80	77	75	68
		32	68	63	60	57	54	53	45
		36	60	56	53	50	47	45	15
		48	45	41	38	35	32	30	-
24	16	16	136	131	128	125	122	121	113
		24	90	86	83	80	77	75	68
		32	68	63	60	57	54	53	23
		36	60	56	53	50	47	45	-
		48	45	41	38	35	29	15	-
	24	16	136	131	128	125	122	121	113
		24	90	86	83	80	77	75	68
		32	68	63	60	57	54	53	23
		36	60	56	53	50	47	45	-
		48	45	41	38	35	29	15	-

SI: 1 in = 25.4 mm, 1 lb = 4.45 N

1. Capacity of the connection at the inner flange and wall assembly is assumed to be controlled by head-pull-through.
2. Based on #14 HWH self-drilling screw.
3. Non-numbered cells (-) indicate that the configuration is not permitted.

Table 5. Maximum Design Wind Pressure for Slotted-Z – 2$^1/_2$" Depth, Horizontal Orientation[1,2,3]

Stud Spacing (in o.c.)	Cladding Screw Spacing (in o.c.)	Slotted-Z Girt Spacing (in o.c.)	Deflection Criteria						
			L/360	L/240					
			Cladding Weight (psf)						
			0	3	5	7	9	10	15
16	16	16	203	199	196	193	190	188	181
		24	136	131	128	125	122	121	113
		32	102	97	94	91	88	87	-
		36	90	86	83	80	77	75	-
		48	68	63	60	57	-	-	-
	24	16	136	131	128	125	122	121	113
		24	90	86	83	80	77	75	68
		32	68	63	60	57	54	53	-
		36	60	56	53	50	47	45	-
		48	45	41	38	35	-	-	-
24	16	16	136	131	128	125	122	121	113
		24	90	86	83	80	77	75	49
		32	68	63	60	57	54	53	-
		36	60	56	53	50	47	32	-
		48	45	41	38	34	-	-	-
	24	16	136	131	128	125	122	121	113
		24	90	86	83	80	77	75	49
		32	68	63	60	57	54	53	-
		36	60	56	53	50	47	32	-
		48	45	41	38	34	-	-	-

SI: 1 in = 25.4 mm, 1 lb = 4.45 N

1. Capacity of the connection at the inner flange and wall assembly is assumed to be controlled by head-pull-through.
2. Based on #14 HWH self-drilling screw.
3. Non-numbered cells (-) indicate that the configuration is not permitted.

Table 6. Maximum Design Wind Pressure for Slotted-Z – 3" Depth, Horizontal Orientation[1,2,3]

Stud Spacing (in o.c.)	Cladding Screw Spacing (in o.c.)	Slotted-Z Girt Spacing (in o.c.)	Deflection Criteria						
			L/360	L/240					
			Cladding Weight (psf)						
			0	3	5	7	9	10	15
16	16	16	203	199	196	193	190	188	181
		24	136	131	128	125	122	121	-
		32	102	97	94	91	88	47	-
		36	90	86	83	80	35	-	-
		48	68	63	60	11	-	-	-
	24	16	136	131	128	125	122	121	113
		24	90	86	83	80	77	75	-
		32	68	63	60	57	54	47	-
		36	60	56	53	50	35	-	-
		48	45	41	38	11	-	-	-
24	16	16	136	131	128	125	122	121	113
		24	90	86	83	80	77	75	-
		32	68	63	60	57	43	15	-
		36	60	56	53	50	10	-	-
		48	45	41	38	1	-	-	-
	24	16	136	131	128	125	122	121	113
		24	90	86	83	80	77	75	-
		32	68	63	60	57	43	15	-
		36	60	56	53	50	10	-	-
		48	45	41	38	1	-	-	-

SI: 1 in = 25.4 mm, 1 lb = 4.45 N

1. Capacity of the connection at the inner flange and wall assembly is assumed to be controlled by head-pull-through.
2. Based on #14 HWH self-drilling screw.
3. Non-numbered cells (-) indicate that the configuration is not permitted.

Table 7. Maximum Design Wind Pressure for Slotted-Z – 3$^1/_2$" Depth, Horizontal Orientation[1,2,3]

Stud Spacing (in o.c.)	Cladding Screw Spacing (in o.c.)	Slotted-Z Girt Spacing (in o.c.)	Deflection Criteria						
			L/360	L/240					
			Cladding Weight (psf)						
			0	3	5	7	9	10	15
16	16	16	203	199	196	193	190	188	181
		24	136	131	128	125	122	121	-
		32	102	97	94	91	-	-	-
		36	90	86	83	70	-	-	-
		48	68	63	60	-	-	-	-
	24	16	136	131	128	125	122	121	113
		24	90	86	83	80	77	75	-
		32	68	63	60	57	-	-	-
		36	60	56	53	50	-	-	-
		48	45	41	38	-	-	-	-
24	16	16	136	131	128	125	122	121	88
		24	90	86	83	80	77	58	-
		32	68	63	60	57	-	-	-
		36	60	56	53	26	-	-	-
		48	45	41	29	-	-	-	-
	24	16	136	131	128	125	122	121	88
		24	90	86	83	80	77	58	-
		32	68	63	60	57	-	-	-
		36	60	56	53	26	-	-	-
		48	45	41	29	-	-	-	-

SI: 1 in = 25.4 mm, 1 lb = 4.45 N

1. Capacity of the connection at the inner flange and wall assembly is assumed to be controlled by head-pull-through.
2. Based on #14 HWH self-drilling screw.
3. Non-numbered cells (-) indicate that the configuration is not permitted.

Table 8. Maximum Design Wind Pressure for Slotted-Z – 4" Depth, Horizontal Orientation[1,2,3]

Stud Spacing (in o.c.)	Cladding Screw Spacing (in o.c.)	Slotted-Z Girt Spacing (in o.c.)	Deflection Criteria						
			L/360	L/240					
			Cladding Weight (psf)						
			0	3	5	7	9	10	15
16	16	16	203	199	196	193	190	188	-
		24	136	131	128	125	88	-	-
		32	102	97	94	39	-	-	-
		36	90	86	83	-	-	-	-
		48	68	63	-	-	-	-	-
	24	16	136	131	128	125	122	121	-
		24	90	86	83	80	77	-	-
		32	68	63	60	39	-	-	-
		36	60	56	53	-	-	-	-
		48	45	41	-	-	-	-	-
24	16	16	136	131	128	125	122	121	-
		24	90	86	83	80	33	-	-
		32	68	63	60	12	-	-	-
		36	60	56	53	-	-	-	-
		48	45	41	-	-	-	-	-
	24	16	136	131	128	125	122	121	-
		24	90	86	83	80	33	-	-
		32	68	63	60	12	-	-	-
		36	60	56	53	-	-	-	-
		48	45	41	-	-	-	-	-

SI: 1 in = 25.4 mm, 1 lb = 4.45 N

1. Capacity of the connection at the inner flange and wall assembly is assumed to be controlled by head-pull-through.
2. Based on #14 HWH self-drilling screw.
3. Non-numbered cells (-) indicate that the configuration is not permitted.

Table 9. Maximum Design Wind Pressure for Slotted-Z – 4$^1/_2$" Depth, Horizontal Orientation[1,2,3]

Stud Spacing (in o.c.)	Cladding Screw Spacing (in o.c.)	Slotted-Z Girt Spacing (in o.c.)	Deflection Criteria						
			L/360	L/240					
			Cladding Weight (psf)						
			0	3	5	7	9	10	15
16	16	16	203	199	196	193	190	188	-
		24	136	131	128	96	-	-	-
		32	102	97	94	-	-	-	-
		36	90	86	16	-	-	-	-
		48	68	63	-	-	-	-	-
	24	16	136	131	128	125	122	121	-
		24	90	86	83	80	-	-	-
		32	68	63	60	-	-	-	-
		36	60	56	16	-	-	-	-
		48	45	41	-	-	-	-	-
24	16	16	136	131	128	125	122	88	-
		24	90	86	83	37	-	-	-
		32	68	63	44	-	-	-	-
		36	60	56	4	-	-	-	-
		48	45	41	-	-	-	-	-
	24	16	136	131	128	125	122	88	-
		24	90	86	83	37	-	-	-
		32	68	63	44	-	-	-	-
		36	60	56	4	-	-	-	-
		48	45	41	-	-	-	-	-

SI: 1 in = 25.4 mm, 1 lb = 4.45 N

1. Capacity of the connection at the inner flange and wall assembly is assumed to be controlled by head-pull-through.
2. Based on #14 HWH self-drilling screw.
3. Non-numbered cells (-) indicate that the configuration is not permitted.

Table 10. Maximum Design Wind Pressure for Slotted-Z – 5" Depth, Horizontal Orientation[1,2]

Stud Spacing (in o.c.)	Cladding Screw Spacing (in o.c.)	Slotted-Z Girt Spacing (in o.c.)	Deflection Criteria						
			L/360	L/240					
			Cladding Weight (psf)						
			0	3	5	7	9	10	15
16	16	16	203	200	198	196	194	193	188
		24	136	133	131	129	127	126	121
		32	102	99	97	95	93	92	87
		36	90	87	85	83	81	80	75
		48	68	65	63	61	59	58	53
	24	16	136	133	131	129	127	126	121
		24	90	87	85	83	81	80	75
		32	68	65	63	61	59	58	53
		36	60	57	55	53	51	50	45
		48	45	42	40	38	36	35	30
24	16	16	136	133	131	129	127	126	121
		24	90	87	85	83	81	80	75
		32	68	65	63	61	59	58	53
		36	60	57	55	53	51	50	45
		48	45	42	40	38	36	35	12
	24	16	136	133	131	129	127	126	121
		24	90	87	85	83	81	80	75
		32	68	65	63	61	59	58	53
		36	60	57	55	53	51	50	45
		48	45	42	40	38	36	35	12

SI: 1 in = 25.4 mm, 1 lb = 4.45 N

1. Capacity of the connection at the inner flange and wall assembly is assumed to be controlled by head-pull-through.
2. Based on #14 HWH self-drilling screw.

Table 11. Maximum Design Wind Pressure for Slotted-Z – 5$^1/_2$" Depth, Horizontal Orientation[1,2,3]

Stud Spacing (in o.c.)	Cladding Screw Spacing (in o.c.)	Slotted-Z Girt Spacing (in o.c.)	Deflection Criteria						
			L/360	L/240					
			Cladding Weight (psf)						
			0	3	5	7	9	10	15
16	16	16	203	200	198	196	194	193	188
		24	136	133	131	129	127	126	121
		32	102	99	97	95	93	92	87
		36	90	87	85	83	81	80	75
		48	68	65	63	61	59	58	-
	24	16	136	133	131	129	127	126	121
		24	90	87	85	83	81	80	75
		32	68	65	63	61	59	58	53
		36	60	57	55	53	51	50	45
		48	45	42	40	38	36	35	-
24	16	16	136	133	131	129	127	126	121
		24	90	87	85	83	81	80	75
		32	68	65	63	61	59	58	53
		36	60	57	55	53	51	50	45
		48	45	42	40	38	36	35	-
	24	16	136	133	131	129	127	126	121
		24	90	87	85	83	81	80	75
		32	68	65	63	61	59	58	53
		36	60	57	55	53	51	50	45
		48	45	42	40	38	36	35	-

SI: 1 in = 25.4 mm, 1 lb = 4.45 N

1. Capacity of the connection at the inner flange and wall assembly is assumed to be controlled by head-pull-through.
2. Based on #14 HWH self-drilling screw.
3. Non-numbered cells (-) indicate that the configuration is not permitted.

Table 12. Maximum Design Wind Pressure for Slotted-Z – 6" Depth, Horizontal Orientation[1,2,3]

Stud Spacing (in o.c.)	Cladding Screw Spacing (in o.c.)	Slotted-Z Girt Spacing (in o.c.)	Deflection Criteria						
			L/360	L/240					
			Cladding Weight (psf)						
			0	3	5	7	9	10	15
16	16	16	203	200	198	196	194	193	188
		24	136	133	131	129	127	126	121
		32	102	99	97	95	93	92	-
		36	90	87	85	83	81	80	-
		48	68	65	63	61	59	-	-
	24	16	136	133	131	129	127	126	121
		24	90	87	85	83	81	80	75
		32	68	65	63	61	59	58	-
		36	60	57	55	53	51	50	-
		48	45	42	40	38	36	-	-
24	16	16	136	133	131	129	127	126	121
		24	90	87	85	83	81	80	75
		32	68	65	63	61	59	58	-
		36	60	57	55	53	51	50	-
		48	45	42	40	38	27	-	-
	24	16	136	133	131	129	127	126	121
		24	90	87	85	83	81	80	75
		32	68	65	63	61	59	58	-
		36	60	57	55	53	51	50	-
		48	45	42	40	38	27	-	-

SI: 1 in = 25.4 mm, 1 lb = 4.45 N

1. Capacity of the connection at the inner flange and wall assembly is assumed to be controlled by head-pull-through.
2. Based on #14 HWH self-drilling screw.
3. Non-numbered cells (-) indicate that the configuration is not permitted.

6.3.3 Allowable wind loads for both plaster/stucco finishes (L/360) and brittle finishes (L/240) per IBC Section 1604.3 based on various cladding weights when installed in the vertical orientation are provided in **Table 13** and **Table 14**.

6.3.3.1 The fastener used for the development of **Table 13** and **Table 14** is the #14 HWH self-drilling screw listed in **Table 2**.

Table 13. Maximum Design Wind Pressure for Slotted-Z with Overall Depths < 5$^1/_2$", Vertical Orientation[1,2]

Stud Spacing (in o.c.)	Cladding Screw Spacing (in o.c.)	Slotted-Z Girt Spacing (in o.c.)	Deflection Criteria						
			L/360	L/240					
			Cladding Weight (psf)						
			0	3	5	7	9	10	15
16	16	16	203	198	196	193	190	188	181
		24	151	146	143	139	136	134	126
		32	113	108	105	102	98	97	88
	24	16	135	131	128	125	122	120	113
		24	135	131	128	125	122	120	113
		32	113	108	105	102	98	97	88
24	16	16	135	131	128	125	122	120	113
		24	101	96	92	89	86	84	76
		32	75	70	67	64	60	59	51
	24	16	90	86	83	80	77	75	68
		24	90	86	83	80	77	75	68
		32	75	70	67	64	60	59	51

SI: 1 in = 25.4 mm, 1 lb = 4.45 N

1. Capacity of the connection at the inner flange and wall assembly is assumed to be controlled by head-pull-through.
2. Based on #14 HWH self-drilling screw.

Table 14. Maximum Design Wind Pressure for Slotted-Z with Overall Depths ≥ $5^1/_2$", Vertical Orientation[1,2]

Stud Spacing (in o.c.)	Cladding Screw Spacing (in o.c.)	Slotted-Z Girt Spacing (in o.c.)	Deflection Criteria						
			L/360	L/240					
			Cladding Weight (psf)						
			0	3	5	7	9	10	15
16	16	16	203	200	198	196	194	193	188
		24	203	200	198	196	194	193	188
		32	193	187	183	179	176	174	164
	24	16	135	132	130	128	126	125	120
		24	135	132	130	128	126	125	120
		32	135	132	130	128	126	125	120
24	16	16	135	132	130	128	126	125	120
		24	135	132	130	128	126	125	120
		32	129	123	119	115	111	109	100
	24	16	90	87	85	83	81	80	75
		24	90	87	85	83	81	80	75
		32	90	87	85	83	81	80	75

SI: 1 in = 25.4 mm, 1 lb = 4.45 N

1. Capacity of the connection at the inner flange and wall assembly is assumed to be controlled by head-pull-through.
2. Based on #14 HWH self-drilling screw.

6.3.4 *Cladding Weight – Evaluated Assembly:*

6.3.4.1 A wall assembly using Slotted-Z – 2" as the sub-framing system for the cladding installation was evaluated for structural performance under a uniformly distributed vertical static load of 50 psf.

6.3.4.1.1 Deflection, measured at the center of rail, after a 24-hour period was 0.02" (0.5 mm).

6.3.4.1.2 Permanent deflection, taken after removal of load at the same location, was 0.01" (0.3 mm).

6.3.4.1.3 No damage was observed to the rails or wall assembly.

6.3.4.1.4 Evaluated wall assembly consisted of 18-gauge 6" deep by $1^5/_8$" wide galvanized steel studs spaced 16" o.c. that were secured onto 18-gauge galvanized steel tracks using #10 x $^3/_4$" self-drilling hex head screws.

6.3.4.1.5 Walls were sheathed with $^5/_8$" thick gypsum wallboard overlaid with a self-adhering air-water barrier.

6.3.4.1.5.1 Gypsum wallboard was secured with #6 x $1^1/_2$" self-drilling flat head screws spaced 16" o.c.

6.3.4.1.6 ACM panels (0.150" thick) used as cladding, were secured to the wall assembly using the Slotted-Z sub-framing system.

6.3.4.1.6.1 Extruded aluminum stiffeners (2" wide by $^{3}/_{16}$" high by 0.06" thick) secured horizontally at midspan of each panel using 1" double-sided foam tape.

6.3.4.1.6.2 ASG ESTOLGA® 1000 Clip-Lock Dry Seal (CLDS) attachment system was used to secure the panels onto the Slotted-Z sub-framing system with #10 x 2" fasteners spaced 16" o.c horizontally and 12" o.c. vertically.

6.3.4.1.6.2.1 ASG ESTOLGA 1000 CLDS U channel was set in the vertical and horizontal joints and secured using #6 x 1" self-drilling hex head screws spaced 16" o.c. horizontally and 16" o.c. vertically.

6.3.4.1.6.2.2 A snap-in silicone gasket was inserted into the vertical and horizontal joints.

6.3.4.1.7 Slotted-Z rails were placed at the top plate, bottom plate, each jamb, and vertically spaced 24" o.c. in a horizontal orientation.

6.3.4.1.7.1 Slotted-Z rails were secured with #10 x 2" hex head screws spaced vertically 12" o.c and horizontally at 16" o.c.

6.3.4.1.7.2 2" thick ROCKWOOL Cavityrock® semi-rigid insulation boards were secured in the cavity space using Cladiator ROCKETStick.

6.3.4.1.8 Aluminum J channels were utilized to interlock to the stiffeners.

6.3.4.1.8.1 The J channels were placed on the rails at midspan of the top and bottom panels and secured with #10 x 2" self-drilling hex head screws spaced 16" o.c.

6.4 *Fire Performance*

6.4.1 *Surface Burning Characteristics:*

6.4.1.1 Slotted-Z was evaluated for surface burning characteristics in accordance with ASTM E84 as specified in IBC Section 2603.5.4, per IBC Section 2613.5 and IBC Section 2603.5.

6.4.1.2 Flame spread and smoke developed indices are provided in **Table 15**.

Table 15. Surface Burning Characteristics[1]

Product	Flame Spread	Smoke Developed	Classification
Slotted-Z	≤ 25	≤ 450	Class A
1. Tested in accordance with ASTM E84			

6.4.2 *Rate of Burning/Extent and Time of Burning (Horizontal Position):*

6.4.2.1 Slotted-Z was evaluated for burn rate and the extent of burning in accordance with ASTM D635.

6.4.2.1.1 Slotted-Z achieved the classification of *"HB"* (Horizontal Burning) as described in ASTM D635.

6.4.2.1.2 Slotted-Z achieved the classification of *"Class CC1"*.

6.4.3 *Fire Propagation:*

6.4.3.1 Cladded wall assemblies with Slotted-Z as the sub-framing system were evaluated to assess performance of vertical and lateral fire propagation in accordance with NFPA 285 as specified in IBC Section 2603.5.5, per IBC Section 2613.5, IBC Section 2603.5, and CAN/ULC S134.

6.4.3.1.1 The evaluated wall assembly (exterior non-load-bearing) complying with NFPA 285 is detailed in **Table 16**.

6.4.3.1.2 The evaluated wall assembly complying with CAN/ULC S134 is shown in **Table 17**.

Table 16. Approved NFPA 285 Wall Assembly

Wall Component	Materials
Base Wall	20-gauge galvanized steel stud assembly
Interior Sheathing	5/8" thick National Gypsum Gold Bond® Fire-Shield® gypsum board conforming to ASTM C1396 ***Note:*** All joints taped with USG Sheetrock® Brand paper joint tape and spackled with USG Sheetrock Brand joint compound
Exterior Sheathing	1. 1/2" thick National Gypsum Gold Bond® eXP® exterior gypsum sheathing conforming to ASTM C1177 2. 5/8" thick National Gypsum Gold Bond® Fire-Shield® gypsum board conforming to ASTM C1177
Weather Barrier Applied to Exterior Sheathing or Base Wall Surface (Under the Wall Insulation)	1. VAPROSHIELD®-WrapShield® SA self-adhered air-water barrier (AWB), 3" overlap between joints 2. Tremco EXO Air 110 AT (installation per manufacturer instructions)
Wall Brackets	Cladiator Slotted-Z FG (Fiberglass) girts a. Use 2.0" web depth when the specified exterior wall insulation is 2" thick ROCKWOOL Cavityrock b. Use 3.0" web depth when the specified exterior wall insulation is 3" thick Kingspan 122 Koolterm
Exterior Wall Insulation	1. 2" ROCKWOOL Cavityrock (nominal density of 4.3 pcf) secured to Cladiator Slotted-Z with ROCKETStick 2. 3" Kingspan K122 Koolterm (seams shall be taped using Nashua 324A insulation tape)
Window Header and Floor Line Insulation	1. 2" ROCKWOOL Cavityrock (nominal density of 2.0 pcf) 2. Johns Manville MinWool® Safing (nominal density of 4.0 pcf)
Cavity Insulation	None
Weather-Resistive Barrier Applied over Exterior Insulation (or FRTW)	None
Exterior Cladding	1. 8 mm CEMBRIT Minerit cement panels 2. Morin MX-8 wall panels

SI: 1 in = 25.4

1. Assemblies were tested and evaluated in accordance with NFPA 285.

Table 17. Approved CAN/ULC S-134 Wall Assembly

Wall Component	Materials
Base Wall	CMU Concrete Walls
Exterior Sheathing	$^5/_8$" thick exterior gypsum sheathing
Weather Barrier Applied to Exterior Sheathing or Base Wall Surface (under the wall insulation)	Henry® Blueskin® VP160 vapor barrier
Wall Brackets	2.275" x 2.347" x 1.648" Cladiator Slotted-Z FG (Fiberglass) girts
Wall Insulation	2" thick mineral wool, 4.6 pcf density secured to Cladiator Slotted-Z with ROCKETStick
Window Header and Floor Line Insulation	2" thick mineral wool, 4.6 pcf density
Cavity Insulation	None
Weather-Resistive Barrier Applied over Exterior Insulation (or FRTW)	None
Exterior Cladding	4 mm ALPOLIC® /fr ACM panels

SI: 1 in = 25.4

1. The assembly was tested and evaluated in accordance with CAN/ULC S-134.

6.5 *Wind Resistance – Evaluated Assembly*

6.5.1 A cladded wall assembly using Slotted-Z – 2" as the sub-framing system for the cladding installation was evaluated for wind resistance in accordance with ASTM E330.

6.5.1.1 Evaluated wall assembly consisted of 18-gauge 6" deep by $1^5/_8$" wide galvanized steel studs spaced 16" o.c. that were secured onto 18-gauge galvanized steel tracks using #10 x $^3/_4$" self-drilling hex head screws.

6.5.1.2 Walls were sheathed with $^5/_8$" thick gypsum wallboard overlaid with a self-adhering air-water barrier.

6.5.1.2.1 Gypsum wallboard was secured with #6 x $1^1/_2$" self-drilling flat head screws spaced 16" o.c.

6.5.1.3 ACM panels (0.150" thick) used as cladding, were secured to the wall assembly using the Slotted-Z sub-framing system.

6.5.1.3.1 Extruded aluminum stiffeners (2" wide by $^3/_{16}$" high by 0.06" thick) secured horizontally at midspan of each panel using 1" double-sided foam tape.

6.5.1.3.2 ASG ESTOLGA 1000 CLDS attachment system was used to secure the panels to the Slotted-Z sub-framing system with #10 x 2" fasteners spaced 16" o.c horizontally and 12" o.c. vertically.

6.5.1.3.2.1 ASG ESTOLGA 1000 CLDS U channel was set in the vertical and horizontal joints and secured using #6 x 1" self-drilling hex head screws spaced 16" o.c. horizontally and 16" o.c. vertically.

6.5.1.3.2.2 A snap-in silicone gasket was inserted into the vertical and horizontal joints.

6.5.1.4 Slotted-Z rails were placed at the top plate, bottom plate, each jamb, and vertically spaced 24" o.c. in a horizontal orientation.

6.5.1.4.1 Slotted-Z rails were secured with #10 x 2" hex head screws spaced vertically 12" o.c and horizontally at 16" o.c.

6.5.1.4.2 2" thick ROCKWOOL CavityRock were secured in the cavity space using Cladiator ROCKETStick.

6.5.1.5 Aluminum J channels were utilized to interlock to the stiffeners.

6.5.1.5.1 The J channels were placed on the rails at midspan of the top and bottom panels and secured with #10 x 2" self-drilling hex head screws spaced 16" o.c.

6.5.1.6 Allowable wind pressure and wind speeds of the evaluated assembly are provided in **Table 18**.

Table 18. Allowable Wind Load and Wind Speed[2]

Product	Direction	Allowable Wind Pressure[1] (psf)	Basic Wind Speed,[3] V_{ult} (mph)			Allowable Wind Speed,[4] V_{asd} (mph)		
			B	C	D	B	C	D
Slotted-Z	Positive	95	200	200	200	155	155	155
	Negative	75	200	195	175	155	150	135

SI: 1 psf = 0.0479 kPa, 1 mph = 1.61 km/hr

1. Tested in accordance with ASTM E330.
2. Wind speed calculations in accordance with ASCE 7 Chapter 30 are based on the following assumptions:
   a. A building height of 30-feet, GC_p= -1.4 for Zone 5 and an Effective Wind Area of 10ft^2, Topographic Factor: K_{zt}=1.0, Ground Elevation Factor: K_e=1.0,Internal Pressure Coefficient, GC_{pi}=+/-0.18 for an enclosed building, K_d = 0.85 for Component and Cladding
3. V_{ult} is limited to 200 mph max.
4. Allowable stress design wind speed shall be determined in accordance with IBC Section 1609.3.1: $V_{asd} = V_{ult}\sqrt{0.6}$.

6.6 *Water Penetration – Evaluated Assembly*

6.6.1 A cladded wall assembly using Slotted-Z - 2" as the sub-framing system for the cladding installation were evaluated for water penetration in accordance with ASTM E331 and met the requirements set forth therein.

6.6.1.1 Under a pressure of 15 psf, no water penetrated through the wall assembly.

6.6.1.1.1 A description of the evaluated wall assembly is provided in **Section 6.6**.

6.7 *Air Leakage – Evaluated Assembly*

6.7.1 A cladded wall assembly using Slotted-Z - 2" as the sub-framing system for the cladding installation were evaluated for air leakage in accordance with ASTM E283.

6.7.1.1 A description of the evaluated wall assembly is provided in **Section 6.6**.

6.7.1.2 Results for air leakage of the evaluated assembly are provided in **Table 19**.

Table 19. Air Leakage

Product	Direction	Air Permeance
Slotted-Z	Infiltration	<0.1 L/(s·m^2) [<0.01 cfm/ft^2]
	Exfiltration	<0.1 L/(s·m^2) [<0.01 cfm/ft^2]

1. Tested in accordance with ASTM E283.

6.8 *Thermal Performance*

6.8.1 Exterior-insulated and split-insulated Cold-Formed Steel (CFS) framed wall assemblies utilizing Slotted-Z were evaluated to determine the effective R-values, U-values, and linear transmittance.

6.8.1.1 Thermal performance of the wall assemblies were evaluated using NX software package from Siemens, and published thermal properties of materials.

6.8.1.2 An example of an exterior-insulated and a split-insulated wall assembly is shown in **Figure 5** and **Figure 6**.

6.8.1.3 Evaluated wall assemblies are listed in **Table 20**.

Table 20. Evaluated Wall Assemblies[1,2] Utilizing Slotted-Z

Cladiator Slotted-Z Girt Depth, in (mm)	Stud Cavity Insulation[3] Nominal R-value, ft² hr °F/Btu	Girt Horizontal Spacing, in (mm)	Girt Vertical Spacing, in (mm)	Exterior Insulation Thickness, in (mm)	Exterior Insulation[4] R-value, ft² hr °F/Btu (m²K/W)
2 7/16 (62)	None, R-19, R-25.2	16 (406)	16 (406), 24 (610)	2 3/16 (56), 3 3/16 (81), 4 3/16 (107), 5 1/4 (133), 6 1/4 (159)	R-8.4 (1.48 RSI), R-12.6 (2.22 RSI), R-16.8 (2.96 RSI), R-21.0 (3.70 RSI), R-25.2 (4.44 RSI)
3 7/16 (88)	None, R-19, R-25.2	16 (406)	16 (406), 24 (610)	2 3/16 (56), 3 3/16 (81), 4 3/16 (107), 5 1/4 (133), 6 1/4 (159)	R-8.4 (1.48 RSI), R-12.6 (2.22 RSI), R-16.8 (2.96 RSI), R-21.0 (3.70 RSI), R-25.2 (4.44 RSI)
4 7/16 (113)	None, R-19, R-25.2	16 (406)	16 (406), 24 (610)	2 3/16 (56), 3 3/16 (81), 4 3/16 (107), 5 1/4 (133), 6 1/4 (159)	R-8.4 (1.48 RSI), R-12.6 (2.22 RSI), R-16.8 (2.96 RSI), R-21.0 (3.70 RSI), R-25.2 (4.44 RSI)
5 1/2 (140)	None, R-19, R-25.2	16 (406)	16 (406), 24 (610)	2 3/16 (56), 3 3/16 (81), 4 3/16 (107), 5 1/4 (133), 6 1/4 (159)	R-8.4 (1.48 RSI), R-12.6 (2.22 RSI), R-16.8 (2.96 RSI), R-21.0 (3.70 RSI), R-25.2 (4.44 RSI)
6 1/2 (165)	None, R-19, R-25.2	16 (406)	16 (406), 24 (610)	2 3/16 (56), 3 3/16 (81), 4 3/16 (107), 5 1/4 (133), 6 1/4 (159)	R-8.4 (1.48 RSI), R-12.6 (2.22 RSI), R-16.8 (2.96 RSI), R-21.0 (3.70 RSI), R-25.2 (4.44 RSI)

1. CFS stud size is 16-gauge, 6" deep by 1 5/8" wide spaced 16" o.c.
2. Exterior and interior side of the CFS studs sheathed with 1/2" thick gypsum wallboard.
3. Applicable to split-insulated wall assemblies. Nominal thickness is 6".
4. ROCKWOOL Cavityrock mineral fiber insulation.

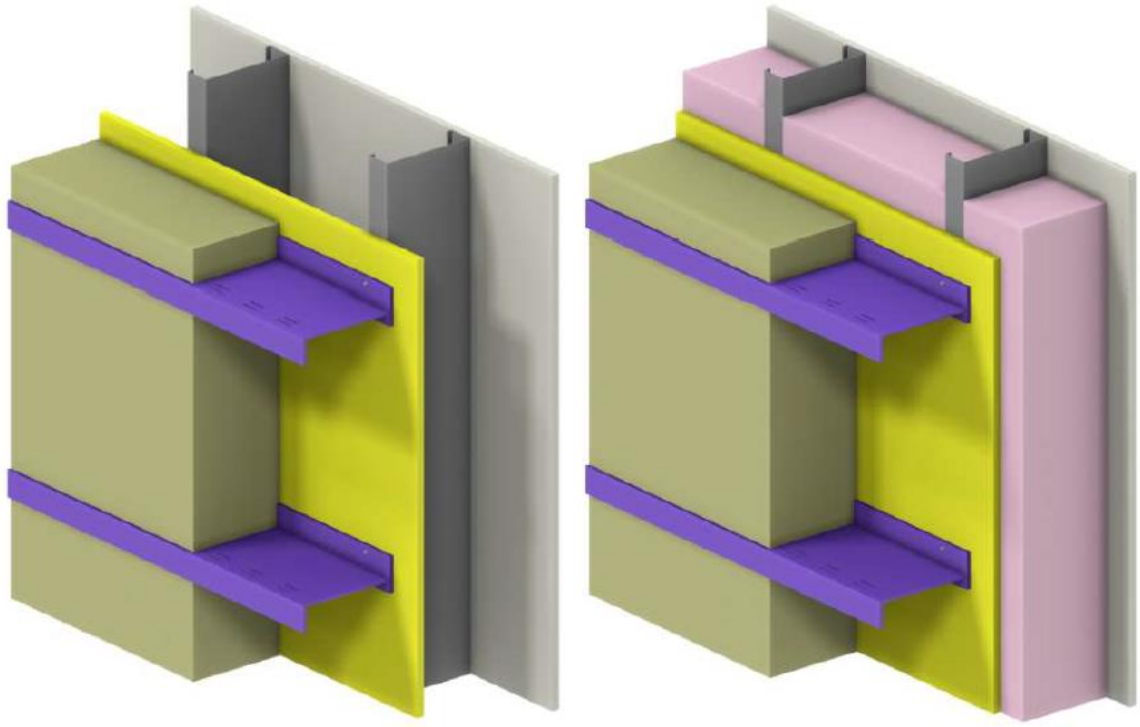

Figure 5. Exterior-Insulated (Left) and Split-Insulated (Right) Wall Assemblies – Horizontal Orientation

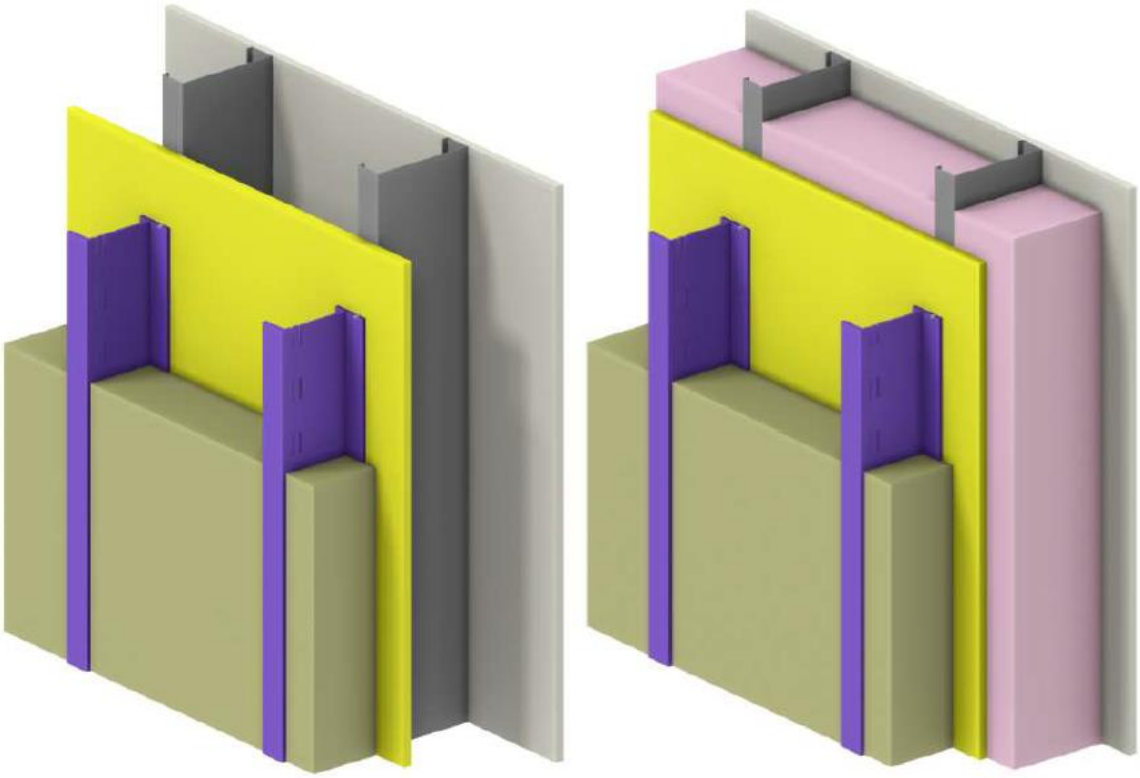

Figure 6. Exterior-Insulated (Left) and Split-Insulated (Right) Wall Assemblies – Vertical Orientation

6.8.2 Effective R-values, U-values, and linear transmittance of exterior insulated wall assemblies with Slotted-Z oriented horizontally and vertically are provided in **Table 21** and **Table 22**, respectively.

6.8.2.1 Values are limited to the wall assemblies described in **Section 6.8**.

Table 21. Thermal Performance of Exterior-Insulated Wall Assemblies Utilizing Slotted-Z – Horizontal Orientation

Cladiator Slotted-Z Girt Depth, in (mm)	Exterior Insulation Thickness, in (mm)	Exterior Insulation R-value, ft² hr °F/Btu (m²K/W)	Assembly U-Value, Btu/h ft² °F (W/m² °K)	Assembly Effective R-Value, ft²hr°F/Btu (m² °K/W)	Slotted-Z Girt Linear Transmittance (ψ), Btu/ft hr °F (W/mK)
Slotted-Z Spaced 16" (406 mm) Vertically					
2 7/16 (62)	2 3/16 (56)	R-8.4 (1.5 RSI)	0.090 (0.512)	R-11.1 (1.95 RSI)	0.005 (0.009)
3 7/16 (88)	3 3/16 (81)	R-12.6 (2.2 RSI)	0.067 (0.379)	R-15.0 (2.64 RSI)	0.005 (0.008)
4 7/16 (113)	4 3/16 (107)	R-16.8 (3.0 RSI)	0.053 (0.300)	R-18.9 (3.33 RSI)	0.004 (0.007)
5 1/2 (140)	5 1/4 (133)	R-21.0 (3.7 RSI)	0.044 (0.249)	R-22.8 (4.01 RSI)	0.003 (0.006)
6 1/2 (165)	6 1/4 (159)	R-25.2 (4.4 RSI)	0.037 (0.213)	R-26.7 (4.70 RSI)	0.003 (0.005)
Slotted-Z Spaced 24" (610 mm) Vertically					
2 7/16 (62)	2 3/16 (56)	R-8.4 (1.5 RSI)	0.089 (0.504)	R-11.3 (1.98 RSI)	0.005 (0.009)
3 7/16 (88)	3 3/16 (81)	R-12.6 (2.2 RSI)	0.066 (0.372)	R-15.3 (2.69 RSI)	0.005 (0.008)
4 7/16 (113)	4 3/16 (107)	R-16.8 (3.0 RSI)	0.052 (0.295)	R-19.2 (3.39 RSI)	0.004 (0.007)
5 1/2 (140)	5 1/4 (133)	R-21.0 (3.7 RSI)	0.043 (0.244)	R-23.2 (4.09 RSI)	0.003 (0.006)
6 1/2 (165)	6 1/4 (159)	R-25.2 (4.4 RSI)	0.037 (0.208)	R-27.2 (4.80 RSI)	0.003 (0.005)

Table 22. Thermal Performance of Exterior-Insulated Wall Assemblies Utilizing Slotted-Z – Vertical Orientation

Cladiator Slotted-Z Girt Depth, in (mm)	Exterior Insulation Thickness, in (mm)	Exterior Insulation R-value, ft² hr °F/Btu (m²K/W)	Assembly U-Value, Btu/h ft² °F (W/m² °K)	Assembly Effective R-Value, ft²hr°F/Btu (m² °K/W)	Slotted-Z Girt Linear Transmittance (ψ), Btu/ft hr °F (W/mK)
Slotted-Z Spaced 16" (406 mm) Horizontally					
2 7/16 (62)	2 3/16 (56)	R-8.4 (1.5 RSI)	0.090 (0.512)	R-11.1 (1.95 RSI)	0.005 (0.009)
3 7/16 (88)	3 3/16 (81)	R-12.6 (2.2 RSI)	0.067 (0.379)	R-15.0 (2.64 RSI)	0.005 (0.008)
4 7/16 (113)	4 3/16 (107)	R-16.8 (3.0 RSI)	0.053 (0.300)	R-18.9 (3.33 RSI)	0.004 (0.007)
5 1/2 (140)	5 1/4 (133)	R-21.0 (3.7 RSI)	0.044 (0.249)	R-22.8 (4.01 RSI)	0.003 (0.006)
6 1/2 (165)	6 1/4 (159)	R-25.2 (4.4 RSI)	0.037 (0.213)	R-26.7 (4.70 RSI)	0.003 (0.005)

6.8.3 Effective R-values, U-values, and linear transmittance of split-insulated wall assemblies with cavity insulation having R-values of 19 and 25.2, and Slotted-Z oriented horizontally are provided in **Table 23** and **Table 24**, respectively.

6.8.3.1 Values are limited to the wall assemblies described in **Section 6.8**.

Table 23. Thermal Performance of Split-Insulated Wall Assemblies, R-19 Batt Insulation Utilizing Slotted-Z – Horizontal Orientation

Cladiator Slotted-Z Girt Depth, in (mm)	Exterior Insulation Thickness, in (mm)	Exterior Insulation R-value, ft² hr °F/Btu (m²K/W)	Assembly U-Value, Btu/h ft² °F (W/m² °K)	Assembly Effective R-Value, ft²hr°F/Btu (m² °K/W)	Slotted-Z Girt Linear Transmittance (ψ), Btu/ft hr °F (W/mK)
Slotted-Z Spaced 16" (406 mm) Vertically					
2 7/16 (62)	2 3/16 (56)	R-8.4 (1.5 RSI)	0.048 (0.275)	R-20.7 (3.64 RSI)	0.001 (0.002)
3 7/16 (88)	3 3/16 (81)	R-12.6 (2.2 RSI)	0.041 (0.230)	R-24.7 (4.35 RSI)	0.002 (0.003)
4 7/16 (113)	4 3/16 (107)	R-16.8 (3.0 RSI)	0.035 (0.198)	R-28.7 (5.06 RSI)	0.002 (0.003)
5 1/2 (140)	5 1/4 (133)	R-21.0 (3.7 RSI)	0.031 (0.174)	R-32.7 (5.76 RSI)	0.002 (0.003)
6 1/2 (165)	6 1/4 (159)	R-25.2 (4.4 RSI)	0.027 (0.155)	R-36.6 (6.45 RSI)	0.002 (0.003)
Slotted-Z Spaced 24" (610 mm) Vertically					
2 7/16 (62)	23/16 (56)	R-8.4 (1.5 RSI)	0.048 (0.273)	R-20.8 (3.67 RSI)	0.001 (0.002)
3 7/16 (88)	33/16 (81)	R-12.6 (2.2 RSI)	0.040 (0.228)	R-25.0 (4.39 RSI)	0.002 (0.003)
4 7/16 (113)	43/16 (107)	R-16.8 (3.0 RSI)	0.034 (0.195)	R-29.1 (5.12 RSI)	0.002 (0.003)
5 1/2 (140)	51/4 (133)	R-21.0 (3.7 RSI)	0.030 (0.171)	R-33.1 (5.84 RSI)	0.002 (0.003)
6 1/2 (165)	61/4 (159)	R-25.2 (4.4 RSI)	0.027 (0.153)	R-37.2 (6.55 RSI)	0.002 (0.003)

Table 24. Thermal Performance of Split-Insulated Wall Assemblies, R-25.2 Batt Insulation Utilizing Slotted-Z – Horizontal Orientation

Cladiator Slotted-Z Girt Depth, in (mm)	Exterior Insulation Thickness, in (mm)	Exterior Insulation R-value, ft² hr °F/Btu (m²K/W)	Assembly U-Value, Btu/h ft² °F (W/m² °K)	Assembly Effective R-Value, ft²hr°F/Btu (m² °K/W)	Slotted-Z Girt Linear Transmittance (ψ), Btu/ft hr °F (W/mK)
Slotted-Z Spaced 16" (406 mm) Vertically					
2 7/16 (62)	2 3/16 (56)	R-8.4 (1.5 RSI)	0.045 (0.255)	R-22.3 (3.92 RSI)	0.001 (0.002)
3 7/16 (88)	3 3/16 (81)	R-12.6 (2.2 RSI)	0.038 (0.215)	R-26.3 (4.64 RSI)	0.001 (0.002)
4 7/16 (113)	4 3/16 (107)	R-16.8 (3.0 RSI)	0.033 (0.187)	R-30.4 (5.35 RSI)	0.001 (0.002)
5 1/2 (140)	5 1/4 (133)	R-21.0 (3.7 RSI)	0.029 (0.165)	R-34.4 (6.05 RSI)	0.001 (0.002)
6 1/2 (165)	6 1/4 (159)	R-25.2 (4.4 RSI)	0.026 (0.148)	R-38.3 (6.75 RSI)	0.001 (0.002)
Slotted-Z Spaced 24" (610 mm) Vertically					
2 7/16 (62)	2 3/16 (56)	R-8.4 (1.5 RSI)	0.045 (0.253)	R-22.4 (3.95 RSI)	0.001 (0.002)
3 7/16 (88)	3 3/16 (81)	R-12.6 (2.2 RSI)	0.038 (0.213)	R-26.6 (4.69 RSI)	0.001 (0.002)
4 7/16 (113)	4 3/16 (107)	R-16.8 (3.0 RSI)	0.033 (0.185)	R-30.7 (5.41 RSI)	0.001 (0.002)
5 1/2 (140)	5 1/4 (133)	R-21.0 (3.7 RSI)	0.029 (0.163)	R-34.8 (6.13 RSI)	0.001 (0.002)

6 1/2 (165)	6 1/4 (159)	R-25.2 (4.4 RSI)	0.026 (0.146)	R-38.9 (6.85 RSI)	0.001 (0.002)

6.8.4 Effective R-values, U-values, and linear transmittance of split-insulated wall assemblies with cavity insulation having R-values of 19 and 25.2, and Slotted-Z oriented vertically are provided in **Table 25** and **Table 26**, respectively.

6.8.4.1 Values are limited to the wall assemblies described in **Section 6.8**.

Table 25. Thermal Performance of Split-Insulated Wall Assemblies, R-19 Batt Insulation Utilizing Slotted-Z – Vertical Orientation

Cladiator Slotted-Z Girt Depth, in (mm)	Exterior Insulation Thickness, in (mm)	Exterior Insulation R-value, ft² hr °F/Btu (m²K/W)	Assembly U-Value, Btu/h ft² °F (W/m² °K)	Assembly Effective R-Value, ft²hr°F/Btu (m² °K/W)	Slotted-Z Girt Linear Transmittance (ψ), Btu/ft hr °F (W/mK)
Slotted-Z Spaced 16" (406 mm) Horizontally					
2 7/16 (62)	2 3/16 (56)	R-8.4 (1.5 RSI)	0.048 (0.275)	R-20.7 (3.64 RSI)	0.001 (0.002)
3 7/16 (88)	3 3/16 (81)	R-12.6 (2.2 RSI)	0.041 (0.230)	R-24.7 (4.35 RSI)	0.002 (0.003)
4 7/16 (113)	4 3/16 (107)	R-16.8 (3.0 RSI)	0.035 (0.198)	R-28.7 (5.06 RSI)	0.002 (0.003)
5 1/2 (140)	5 1/4 (133)	R-21.0 (3.7 RSI)	0.031 (0.174)	R-32.7 (5.76 RSI)	0.002 (0.003)
6 1/2 (165)	6 1/4 (159)	R-25.2 (4.4 RSI)	0.027 (0.155)	R-36.6 (6.45 RSI)	0.002 (0.003)

Table 26. Thermal Performance of Split-Insulated Wall Assemblies, R-25.2 Batt Insulation Utilizing Slotted-Z – Vertical Orientation

Cladiator Slotted-Z Girt Depth, in (mm)	Exterior Insulation Thickness, in (mm)	Exterior Insulation R-value, ft² hr °F/Btu (m²K/W)	Assembly U-Value, Btu/h ft² °F (W/m² °K)	Assembly Effective R-Value, ft²hr°F/Btu (m² °K/W)	Slotted-Z Girt Linear Transmittance (ψ), Btu/ft hr °F (W/mK)
Slotted-Z Spaced 16" (406 mm) Horizontally					
2 7/16 (62)	2 3/16 (56)	R-8.4 (1.5 RSI)	0.045 (0.255)	R-22.3 (3.92 RSI)	0.001 (0.002)
3 7/16 (88)	3 3/16 (81)	R-12.6 (2.2 RSI)	0.038 (0.215)	R-26.3 (4.64 RSI)	0.001 (0.002)
4 7/16 (113)	4 3/16 (107)	R-16.8 (3.0 RSI)	0.033 (0.187)	R-30.4 (5.35 RSI)	0.001 (0.002)
5 1/2 (140)	5 1/4 (133)	R-21.0 (3.7 RSI)	0.029 (0.165)	R-34.4 (6.05 RSI)	0.001 (0.002)
6 1/2 (165)	6 1/4 (159)	R-25.2 (4.4 RSI)	0.026 (0.148)	R-38.3 (6.75 RSI)	0.001 (0.002)

6.9 Where the application falls outside of the performance evaluation, conditions of use, and/or installation requirements set forth herein, alternative techniques shall be permitted in accordance with accepted engineering practice and experience. This includes but is not limited to the following areas of engineering: mechanics or materials, structural, building science, and fire science.

7 Certified Performance[22]

7.1 All construction methods shall conform to accepted engineering practices to ensure durable, livable, and safe construction and shall demonstrate acceptable workmanship reflecting journeyman quality of work of the various trades.[23]

7.2 The strength and rigidity of the component parts and/or the integrated structure shall be determined by engineering analysis or by suitable load tests to simulate the actual loads and conditions of application that occur.[24]

8 Regulatory Evaluation and Accepted Engineering Practice

8.1 Slotted-Z complies with the following legislatively adopted regulations and/or accepted engineering practice for the following reasons:

8.1.1 Material properties (flexural, compression, dowel bearing, pull-through) as specified in ASTM D4762

8.1.2 Performance for use in exterior walls of buildings of any height and of Type I-V construction in accordance with IBC Section 2603.5, per IBC Section 2613.5.

8.1.3 Performance regarding flame spread and smoke development in accordance with ASTM E84 as specified in IBC Section 2603.5.4, per IBC Section 2613.5.

8.1.4 Performance regarding the rate of burning and the extent and time of burning in accordance with ASTM D635.

8.1.5 Performance of vertical and lateral fire propagation in accordance with NFPA 285 as specified in IBC Section 2603.5.5, per IBC Section 2613.5.

8.1.6 Structural performance under transverse load conditions for wind loading in accordance with IBC Section 1609.

8.1.7 Performance against wind-driven rain in accordance with ASTM E331 as specified in IBC Section 1402.2

8.1.8 Air leakage performance as part of an air barrier assembly in accordance with ASTM E283 as specified in IECC Section C402.5.1.4.

8.1.9 Thermal resistance as required for building thermal envelope assemblies per IECC Section C402.

8.2 Any building code, regulation and/or accepted engineering evaluations (i.e., research reports, duly authenticated reports, etc.) that are conducted for this Listing were performed by DrJ Engineering, LLC (DrJ), an ISO/IEC 17065 accredited certification body and a professional engineering company operated by RDP/approved sources. DrJ is qualified[25] to practice product and regulatory compliance services within its scope of accreditation and engineering expertise, respectively.

8.3 Engineering evaluations are conducted with DrJ's ANAB accredited ICS code scope of expertise, which are also its areas of professional engineering competence.

8.4 Any regulation specific issues not addressed in this section are outside the scope of this report.

9 Installation

9.1 Installation shall comply with the approved construction documents, the manufacturer installation instructions, this report, and the applicable building code.

9.2 In the event of a conflict between the manufacturer installation instructions and this report, the more restrictive shall govern.

9.3 *General*

9.3.1 Inspect the substrate for the readiness to install girts.

9.3.2 Prior to installation, inspect Slotted-Z for any quality issues per ASTM D4385.

9.3.3 If required, Slotted-Z may be cut to length with a miter saw, circular saw, band saw, or jigsaw.

9.3.3.1 If using a miter or a circular saw, it is recommended to use gritted or diamond saw blades with a grit size from 30 to 60.

9.3.3.2 If using a band saw or a jigsaw, it is recommended to use gritted, diamond, or basic metal blades with 24 - 32 teeth per inch.

9.3.4 When installing into a steel stud framed structure, the minimum penetration into the stud should be three full threads.

9.3.5 For concrete, CMU and wood substrates, typically a $1^1/_4$" minimum embedment is recommended utilizing threaded structural fasteners designed for the substrate.

9.3.5.1 Pre-drilling of Slotted-Z may be necessary for concrete, CMU, and wood substrate application.

9.3.5.2 Verify substrate is free of debris, defects, and is of suitable planarity to support the sub-framing and façade.

9.3.6 Ensure not to strip or excessively tighten the fasteners. Adhere to all fastener specifications including minimum edge distances and drill speeds as provided by the fastener manufacturer.

9.3.7 Leave a $^3/_{16}$" minimum gap between installed Slotted-Z girts to allow for thermal movement.

9.3.7.1 Do not butt up directly against each other.

9.3.8 For Slotted-Z installed horizontally, if a starter strip is needed, Slotted-Z can be fabricated into a non-structural vented J-channel.

9.4 *Attachment to Substrate*

9.4.1 Fasten through centerline on back flange of Slotted-Z into stud wall using approved fasteners with 16" o.c. spacing, drilling into the stud(s) when applicable.

9.4.2 When fastening into CMU or concrete substrate, use threaded concrete fasteners approved for the project specific design load.

9.4.2.1 Do not use impact fasteners or impact power tools when installing Slotted-Z.

9.4.3 Shims may be used to level as necessary up to $^1/_4$" depth, which should be installed facing downwards to decrease water build up.

9.4.4 Spacing of fasteners shall not exceed 16" o.c. spacing, unless otherwise noted by engineer.

9.4.5 Install Slotted-Z at all corners and jams to provide support for any exterior claddings and flashings.

9.5 *Securement of Insulation*

9.5.1 Secure semi-rigid (mineral wool) or rigid insulation using ROCKETStick by inserting into pre-fabricated slots.

9.5.2 Recommended spacing is four (4) ROCKETSticks per 10' of Slotted-Z (approximately every $2^1/_2$').

9.5.3 Repeat this pattern to continue the installation of Slotted-Z per the installation plan, with proper terminations at the opening and top wall conditions.

9.5.3.1 Details of termination conditions shall be in accordance with the approved construction drawings.

9.6 *Cladding Fastening*

9.6.1 Attach cladding by fastening into front flange of Slotted-Z using the centerline as a guide.

9.6.2 Use approved #14 Hex Washer Head self-drilling screw or approved fastening component to meet project specific load requirements.

Confidential Intellectual Property Is protected by Defend Trade Secrets Act 2016, ©DrJ Engineering, LLC

9.7 Slotted-Z can be installed horizontally or vertically on a wall to support the cladding and accommodate the insulation between flanges. See **Figure 7** for horizontal installation and **Figure 8** for vertical installation details.

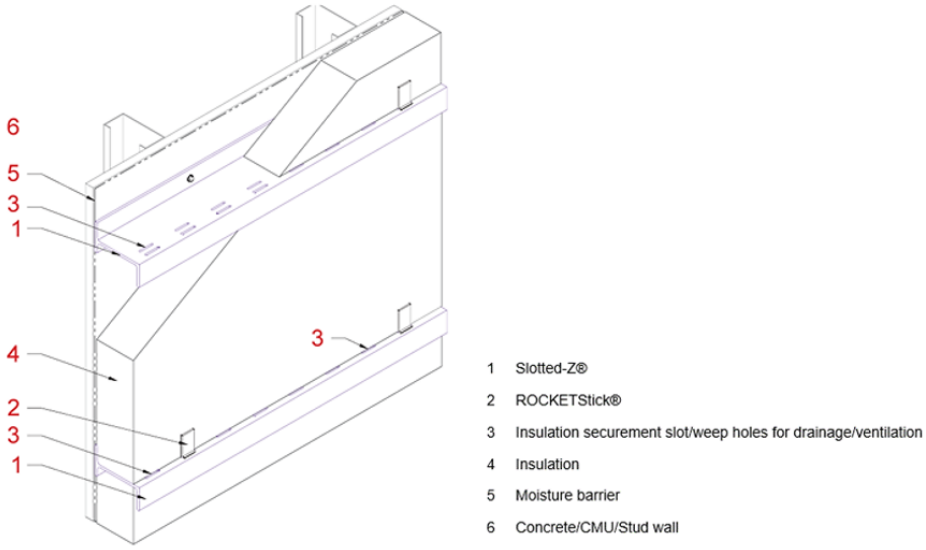

Figure 7. Slotted-Z Horizontal Installation

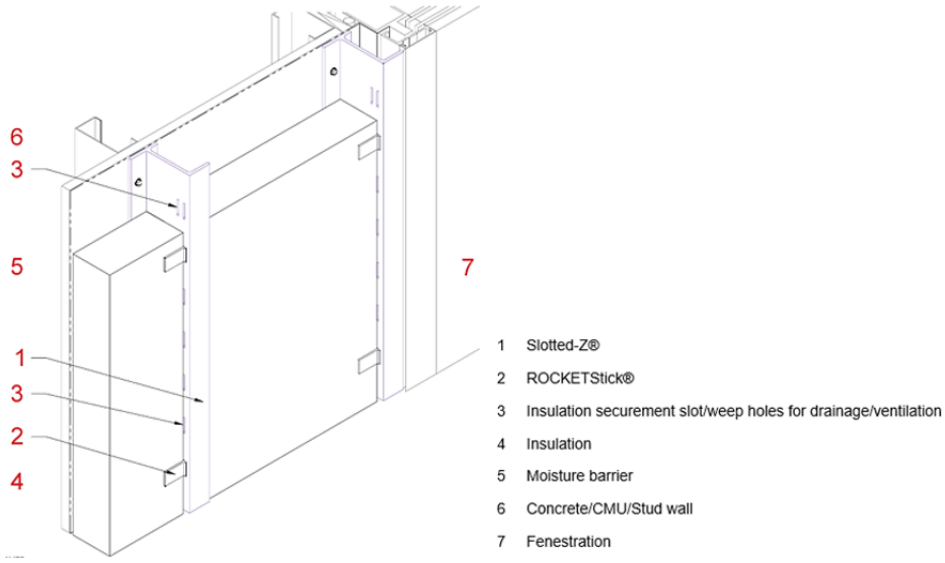

Figure 8. Slotted-Z Vertical Installation

10 Substantiating Data

10.1 Testing has been performed under the supervision of a professional engineer and/or under the requirements of ISO/IEC 17025 as follows:

10.1.1 Flexural testing in accordance with ASTM D790

10.1.2 Compression testing in accordance with ASTM D695

10.1.3 Fastener withdrawal testing in accordance with ASTM D1761

10.1.4 Fastener head-pull-through testing in accordance with ASTM D7332

10.1.5 Fastener dowel bearing testing in accordance with ASTM D5961

10.1.6 Surface burning characteristics in accordance with ASTM E84

10.1.7 Rate/extent of burning in accordance with ASTM D635

10.1.8 Vertical and lateral fire propagation testing in accordance with NFPA 285 and CAN/ULC S134

10.1.9 Transverse load resistance testing in accordance with ASTM E330

10.1.10 Water penetration testing in accordance with ASTM E331

10.1.11 Air leakage testing in accordance with ASTM E283

10.1.12 Wind pressure calculations performed by an approved source

10.1.13 Thermal modeling analysis from an approved source

10.2 Information contained herein may include the result of testing and/or data analysis by sources that are approved agencies, approved sources, and/or RDPs. Accuracy of external test data and resulting analysis is relied upon.

10.3 Where applicable, testing and/or engineering analysis are based upon provisions that have been codified into law through state or local adoption of regulations and standards. The developers of these regulations and standards are responsible for the reliability of published content. DrJ's engineering practice may use a regulation-adopted provision as the control. A regulation-endorsed control versus a simulation of the conditions of application to occur establishes a new material as being equivalent to the regulatory provision in terms of quality, strength, effectiveness, fire resistance, durability, and safety.

10.4 The accuracy of the provisions provided herein may be reliant upon the published properties of raw materials, which are defined by the grade mark, grade stamp, mill certificate, or duly authenticated reports from approved agencies and/or approved sources provided by the supplier. These are presumed to be minimum properties and relied upon to be accurate. The reliability of DrJ's engineering practice, as contained in this duly authenticated report, may be dependent upon published design properties by others.

10.5 Testing and engineering analysis: The strength, rigidity, and/or general performance of component parts and/or the integrated structure are determined by suitable tests that simulate the actual conditions of application that occur and/or by accepted engineering practice and experience.[26]

10.6 Where additional condition of use and/or regulatory compliance information is required, please search for Slotted-Z on the DrJ Certification website.

11 Findings

11.1 As outlined in **Section 6**, Slotted-Z has performance characteristics that were tested and/or meet applicable regulations and are suitable for use pursuant to its specified purpose.

11.2 When used and installed in accordance with this duly authenticated report and the manufacturer installation instructions, Slotted-Z shall be approved for the following applications:

11.2.1 Material properties (flexural, compression, dowel bearing, pull-through) in accordance with ASTM D4762

11.2.2 Performance for use in exterior walls of buildings of any height and of Type I-V construction in accordance with IBC Section 2603.5, per IBC Section 2613.5

11.2.3 Performance regarding flame spread and smoke development in accordance with ASTM E84 as specified in IBC Section 2603.5.4, per IBC Section 2613.5

11.2.4 Performance regarding the rate of burning, and the extent and time of burning in accordance with ASTM D635

11.2.5 Performance of vertical and lateral fire propagation in accordance with NFPA 285, as specified in IBC Section 2603.5.5, per IBC Section 2613.5

11.2.6 Structural performance under transverse load conditions for wind loading in accordance with IBC Section 1609

11.2.7 Performance against wind-driven rain in accordance with ASTM E331, as specified in IBC Section 1402.2

11.2.8 Air leakage performance as an air barrier assembly in accordance with ASTM E283, as specified in IECC Section C402.5.1.4

11.3 As stated in IBC Section 2613.5, compliance with IBC Section 2603.5 is not required where FRP products are installed on buildings that are 40' or less above grade and the following conditions are met:

11.3.1 The FRP products shall meet the requirements of IBC Section 1405.1.

11.3.2 Where the fire separation distance is 5' or less, the area of the FRP products shall not exceed ten percent (10%) of the wall area.

11.3.2.1 Where the fire separation distance is greater than 5', the area of the exterior wall coverage using fiber reinforced polymer shall not be limited.

11.3.3 The FRP products shall have a flame spread index of 200 or less. The flame spread index requirements do not apply to coatings or paints having a thickness of less than 0.036" that are applied directly to the surface of the FRP product.

11.3.3.1 Slotted-Z complies with the flame spread requirements.

11.3.4 Fireblocking complying with IBC Section 718.2.6 shall be installed.

11.4 Unless exempt by state statute, when Slotted-Z is to be used as a structural and/or building envelope component in the design of a specific building, the design shall be performed by an RDP.

11.5 Any application specific issues not addressed herein can be engineered by an RDP. Assistance with engineering is available from Cladiator.

11.6 IBC Section 104.11 (IRC Section R104.11 and IFC Section 104.10[27] are similar) in pertinent part states:

> **104.11 Alternative materials, design and methods of construction and equipment.** The provisions of this code are not intended to prevent the installation of any material or to prohibit any design or method of construction not specifically prescribed by this code. Where the alternative material, design or method of construction is not approved, the building official shall respond in writing, stating the reasons the alternative was not approved.

11.7 **Approved**:[28] Building regulations require that the building official shall accept duly authenticated reports.[29]

11.7.1 An approved agency is *"approved"* when it is ANAB ISO/IEC 17065 accredited.

11.7.2 An approved source is *"approved"* when an RDP is properly licensed to transact engineering commerce.

11.7.3 Federal law, Title 18 US Code Section 242, requires that where the alternative product, material, service, design, assembly, and/or method of construction is not approved, the building official shall respond in writing, stating the reasons why the alternative was not approved. Denial without written reason deprives a protected right to free and fair competition in the marketplace.

11.8 DrJ is a licensed engineering company, employs licensed RDPs and is an ANAB-Accredited Product Certification Body – Accreditation #1131.

11.9 Through the IAF Multilateral Agreements (MLA), this duly authenticated report can be used to obtain product approval in any jurisdiction or country because all ANAB ISO/IEC 17065 duly authenticated reports are equivalent.[30]

12 Conditions of Use

12.1 Material properties shall not fall outside the boundaries defined in **Section 6**.

12.2 As defined in **Section 6**, where material and/or engineering mechanics properties are created for load resisting design purposes, the resistance to the applied load shall not exceed the ability of the defined properties to resist those loads using the principles of accepted engineering practice.

12.3 Fireblocking shall be installed in accordance with IBC Section 718, as required in IBC Section 2613.5.

12.4 When required by adopted legislation and enforced by the building official, also known as the authority having jurisdiction (AHJ) in which the project is to be constructed:

12.4.1 Any calculations incorporated into the construction documents shall conform to accepted engineering practice and, when prepared by an approved source, shall be approved when signed and sealed.

12.4.2 This report and the installation instructions shall be submitted at the time of permit application.

12.4.3 This innovative product has an internal quality control program and a third-party quality assurance program.

12.4.4 At a minimum, this innovative product shall be installed per **Section 9** of this report.

12.4.5 The review of this report by the AHJ shall comply with IBC Section 104 and IBC Section 105.4.

12.4.6 This innovative product has an internal quality control program and a third party quality assurance program in accordance with IBC Section 104.4, IBC Section 110.4, IBC Section 1703, IRC Section R104.4, and IRC Section R109.2.

12.4.7 The application of this innovative product in the context of this report is dependent upon the accuracy of the construction documents, implementation of installation instructions, inspection as required by IBC Section 110.3, IRC Section R109.2, and any other regulatory requirements that may apply.

12.5 The approval of this report by the AHJ shall comply with IBC Section 1707.1, where legislation states in part, "*the building official shall accept duly authenticated reports from approved agencies in respect to the quality and manner of use of new material or assemblies as provided for in Section 104.11*," all of IBC Section 104, and IBC Section 105.4.

12.6 Design loads shall be determined in accordance with the regulations adopted by the jurisdiction in which the project is to be constructed and/or by the building designer (i.e., owner or RDP).

12.7 The actual design, suitability, and use of this report for any particular building, is the responsibility of the owner or the authorized agent of the owner.

13 Identification

13.1 The innovative product listed in **Section 1.1** is identified by a label on the board or packaging material bearing the manufacturer name, product name, this report number, and other information to confirm code compliance.

13.2 Additional technical information can be found at www.cladiator.com.

14 Review Schedule

14.1 This report is subject to periodic review and revision. For the latest version, visit drjcertification.org.

14.2 For information on the status of this report, please contact DrJ Certification.

15 Approved for Use Pursuant to U.S. and International Legislation Defined in Appendix A

15.1 Slotted-Z is included in this report published by an approved agency that is concerned with evaluation of products or services, maintains periodic inspection of the production of listed materials or periodic evaluation of services. This report states either that the material, product, or service meets recognized standards or has been tested and found suitable for a specified purpose. This report meets the legislative intent and definition of being acceptable to the AHJ.

Appendix A

16 Legislation that Authorizes AHJ Approval

16.1 **Fair Competition**: State legislatures have adopted Federal regulations for the examination and approval of building code referenced and alternative products, materials, designs, services, assemblies, and/or methods of construction that:

16.1.1 Advance innovation.

16.1.2 Promote competition so all businesses have the opportunity to compete on price and quality in an open market on a level playing field unhampered by anticompetitive constraints.

16.1.3 Benefit consumers through lower prices, better quality, and greater choice.

16.2 **Adopted Legislation**: The following local, state and federal regulations affirmatively authorize this innovative product to be approved by AHJs, delegates of building departments, and/or delegates of an agency of the federal government:

16.2.1 Interstate commerce is governed by the Federal Department of Justice to encourage the use of innovative products, materials, designs, services, assemblies, and/or methods of construction. The goal is to "*protect economic freedom and opportunity by promoting free and fair competition in the marketplace*."

16.2.2 Title 18 US Code Section 242 affirms and regulates the right of individuals and businesses to freely and fairly have new products, materials, designs, services, assemblies, and/or methods of construction approved for use in commerce. Disapproval of alternatives shall be based upon non-conformance with respect to specific provisions of adopted legislation and shall be provided in writing stating the reasons why the alternative was not approved, with reference to the specific legislation violated.

16.2.3 The federal government and each state have a public records act. In addition, each state also has legislation that mimics the federal Defend Trade Secrets Act 2016 (DTSA),[31] where providing test reports, engineering analysis, and/or other related IP/TS is subject to prison of not more than ten years[32] and/or a $5,000,000 fine or 3 times the value of[33] the Intellectual Property (IP) and Trade Secrets (TS).

16.2.3.1 Compliance with public records and trade secret legislation requires approval through the use of Listings, certified reports, Technical Evaluation Reports, duly authenticated reports, and/or research reports prepared by approved agencies and/or approved sources.

16.2.4 For new materials[34] that are not specifically provided for in any regulation, the design strengths and permissible stresses shall be established by tests, where suitable load tests simulate the actual loads and conditions of application that occur.

16.2.5 The design strengths and permissible stresses of any structural material shall conform to the specifications and methods of design using accepted engineering practice.[35]

16.2.6 The commerce of approved sources (i.e., registered PEs) is regulated by professional engineering legislation. Professional engineering commerce shall always be approved by AHJs, except where there is evidence provided in writing, that specific legislation have been violated by an individual registered PE.

16.2.7 The AHJ shall accept duly authenticated reports from approved agencies in respect to the quality and manner of use of new materials or assemblies as provided for in IBC Section 104.11.[36]

16.3 **Approved**[37] **by Los Angeles**: The Los Angeles Municipal Code (LAMC) states in pertinent part that the provisions of LAMC are not intended to prevent the use of any material, device, or method of construction not specifically prescribed by LAMC. The Department shall use Part III, Recognized Standards in addition to Part II, Uniform Building Code Standards of Division 35, Article 1, Chapter IX of the LAMC in evaluation of products for approval where such standard exists for the product or the material and may use other approved standards that apply. Whenever tests or certificates of any material or fabricated assembly are required by Chapter IX of the LAMC, such tests or certification shall be made by a testing agency approved by the Superintendent of Building to conduct such tests or provide such certifications. The testing agency shall publish the scope and limitation(s) of the listed material or fabricated assembly.[38] The Superintendent of Building Approved Testing Agency Roster is provided by the Los Angeles Department of Building and Safety (LADBS). The Center for Building Innovation (CBI) Certificate of Approval License is TA24945. Tests and certifications found in a DrJ Listing are LAMC approved. In addition, the Superintendent of Building shall accept duly authenticated reports from approved agencies in respect to the quality and manner of use of new materials or assemblies as provided for in the California Building Code (CBC) Section 1707.1.[39]

16.4 **Approved by Chicago**: The Municipal Code of Chicago (MCC) states in pertinent part that an Approved Agency is a Nationally Recognized Testing Laboratory (NRTL) acting within its recognized scope and/or a certification body accredited by the American National Standards Institute (ANSI) acting within its accredited scope. Construction materials and test procedures shall conform to the applicable standards listed in the MCC. Sufficient technical data shall be submitted to the building official to substantiate the proposed use of any product, material, service, design, assembly, and/or method of construction not specifically provided for in the MCC. This technical data shall consist of research reports from approved sources (i.e., MCC defined Approved Agencies).

16.5 **Approved by New York City**: The 2022 NYC Building Code (NYCBC) states in part that an approved agency shall be deemed[40] an approved testing agency via ISO/IEC 17025 accreditation, an approved inspection agency via ISO/IEC 17020 accreditation, and an approved product evaluation agency via ISO/IEC 17065 accreditation. Accrediting agencies, other than federal agencies, must be members of an internationally recognized cooperation of laboratory and inspection accreditation bodies subject to a mutual recognition agreement[41] (i.e., ANAB, International Accreditation Forum also known as IAF, etc.).

16.6 **Approved by Florida**: Statewide approval of products, methods or systems of construction shall be approved, without further evaluation by:

16.6.1 A certification mark or listing of an approved certification agency,

16.6.2 A test report from an approved testing laboratory,

16.6.3 A product evaluation report based upon testing or comparative or rational analysis, or a combination thereof, from an approved product evaluation entity, or

16.6.4 A product evaluation report based upon testing, comparative or rational analysis, or a combination thereof, developed, signed, and sealed by a professional engineer or architect, licensed in Florida.

16.6.5 For local product approval, products or systems of construction shall demonstrate compliance with the structural wind load requirements of the Florida Building Code (FBC) through one of the following methods:

16.6.5.1 A certification mark, listing, or label from a commission-approved certification agency indicating that the product complies with the code,

16.6.5.2 A test report from a commission-approved testing laboratory indicating that the product tested complies with the code,

16.6.5.3 A product-evaluation report based upon testing, comparative or rational analysis, or a combination thereof, from a commission-approved product evaluation entity which indicates that the product evaluated complies with the code,

16.6.5.4 A product-evaluation report or certification based upon testing or comparative or rational analysis, or a combination thereof, developed and signed and sealed by a Florida professional engineer or Florida registered architect, which indicates that the product complies with the code, or

16.6.5.5 A statewide product approval issued by the Florida Building Commission.

16.6.6 The Florida Department of Business and Professional Regulation (DBPR) website provides a listing of companies certified as a Product Evaluation Agency (i.e., EVLMiami 13692), a Product Certification Agency (i.e., CER10642), and as a Florida Registered Engineer (i.e., ANE13741).

16.7 **Approved by Miami-Dade County (i.e., Notice of Acceptance [NOA])**: A Florida statewide approval is an NOA. An NOA is a Florida local product approval. By Florida law, Miami-Dade County shall accept the statewide and local Florida Product Approval as provided for in Florida legislation 553.842 and 553.8425.

16.8 **Approved by New Jersey**: Pursuant to the 2018 Building Code of New Jersey in IBC Section 1707.1 General,[42] it states: "*In the absence of approved rules or other approved standards, the building official shall accept duly authenticated reports from approved agencies in respect to the quality and manner of use of new materials or assemblies as provided for in the administrative provisions of the Uniform Construction Code (N.J.A.C. 5:23)*".[43] Furthermore N.J.A.C 5:23-3.7 states: "*Municipal approvals of alternative materials, equipment, or methods of construction*."

16.8.1 **Approvals**: Alternative materials, equipment, or methods of construction shall be approved by the appropriate subcode official provided the proposed design is satisfactory and that the materials, equipment, or methods of construction are suitable for the intended use and are at least the equivalent in quality, strength, effectiveness, fire resistance, durability, and safety of those conforming with the requirements of the regulations.

16.8.1.1 A field evaluation label and report or letter issued by a nationally recognized testing laboratory verifying that the specific material, equipment, or method of construction meets the identified standards or has been tested and found to be suitable for the intended use, shall be accepted by the appropriate subcode official as meeting the requirements of the above.

16.8.1.2 Reports of engineering findings issued by nationally recognized evaluation service programs such as but not limited to, the Building Officials and Code Administrators (BOCA), the International Conference of Building Officials (ICBO), the Southern Building Code Congress International (SBCCI), the International Code Council (ICC), and the National Evaluation Service, Inc., shall be accepted by the appropriate subcode official as meeting the requirements of the above.

16.8.2 The New Jersey Department of Community Affairs has confirmed that technical evaluation reports, from any accredited entity listed by ANAB, meets the requirements of item the previous paragraph, given that the listed entities are no longer in existence and/or do not provide "*reports of engineering findings*."

16.9 **Approved by the Code of Federal Regulations Manufactured Home Construction and Safety Standards**: Pursuant to Title 24, Subtitle B, Chapter XX, Part 3282.14[44] and Part 3280,[45] the Department encourages innovation and the use of new technology in manufactured homes. The design and construction of a manufactured home shall conform to the provisions of Part 3282 and Part 3280 where key approval provisions in mandatory language follow:

16.9.1 *"All construction methods shall be in conformance with accepted engineering practices."*

16.9.2 *"The strength and rigidity of the component parts and/or the integrated structure shall be determined by engineering analysis or by suitable load tests to simulate the actual loads and conditions of application that occur."*

16.9.3 *"The design stresses of all materials shall conform to accepted engineering practice."*

16.10 **Approval by US, Local and State Jurisdictions in General**: In all other local and state jurisdictions, the adopted building code legislation states in pertinent part that:

16.10.1 For new materials that are not specifically provided for in this code, the design strengths and permissible stresses shall be established by tests.[46]

16.10.2 For innovative alternatives and/or methods of construction, the building official shall accept duly authenticated reports from approved agencies with respect to the quality and manner of use of new materials or assemblies.[47]

16.10.2.1 An approved agency is *"approved"* when it is ANAB ISO/IEC 17065 accredited. DrJ Engineering, LLC (DrJ) is in the ANAB directory.

16.10.2.2 An approved source is *"approved"* when an RDP is properly licensed to transact engineering commerce. The regulatory authority governing approved sources is the state legislature via its professional engineering regulations.[48]

16.10.3 The design strengths and permissible stresses of any structural material…shall conform to the specifications and methods of design of accepted engineering practice performed by an approved source.[49]

16.11 **Approval by International Jurisdictions**: The USMCA and GATT agreements provide for approval of innovative materials, designs, services, and/or methods of construction through the Agreement on Technical Barriers to Trade and the IAF Multilateral Recognition Arrangement (MLA), where these agreements:

16.11.1 State that conformity assessment procedures (i.e., ISO/IEC 17020, 17025, 17065, etc.) are prepared, adopted, and applied so as to grant access for suppliers of like products originating in the territories of other Members under conditions no less favourable than those accorded to suppliers of like products of national origin or originating in any other country, in a comparable situation.

16.11.2 **Approved**: The purpose of the MLA is to ensure mutual recognition of accredited certification and validation/verification statements between signatories to the MLA and subsequently, acceptance of accredited certification and validation/verification statements in many markets based on one accreditation for the timely approval of innovative materials, designs, services, and/or methods of construction.

16.11.3 ANAB is an IAF-MLA signatory where recognition of certificates, validation, and verification statements issued by conformity assessment bodies accredited by all other signatories of the IAF MLA, with the appropriate scope, shall be approved.[50]

16.11.4 Therefore, all ANAB ISO/IEC 17065 duly authenticated reports are approval equivalent.[51]

16.12 Approval equity is a fundamental commercial and legal principle.[52]

Issue Date: February 27, 2025
Subject to Renewal: April 1, 2027

FBC Supplement to Report Number 2210-01

REPORT HOLDER: Cladiator

1 Evaluation Subject

1.1 Slotted-Z

2 Purpose and Scope

2.1 Purpose

2.1.1 The purpose of this Report Supplement is to show Slotted-Z, recognized in Report Number 2210-01, has also been evaluated for compliance with the codes listed below as adopted by the Florida Building Commission.

2.2 *Applicable Code Editions*

2.2.1 *FBC-B—20, 23: Florida Building Code – Building*

2.2.2 *FBC-R—20, 23: Florida Building Code – Residential*

3 Conclusions

3.1 Slotted-Z, described in Report Number 2210-01, complies with the FBC-B and FBC-R and is subject to the conditions of use described in this supplement.

3.2 Where there are variations between the IBC and IRC and the FBC-B and FBC-R applicable to this report, they are listed here:

3.2.1 FBC-B Section 104.4 and Section 110.4 are reserved.

3.2.2 FBC-R Section R104 and Section R109 are reserved.

3.2.3 FBC-B Section 718 replaces IBC Section 718

3.2.4 FBC-B Section 718.2.6 replaces IBC Section 718.2.6.

3.2.5 FBC-B Section 1403.2 replaces IBC Section 1402.2.

3.2.6 FBC-B Section 1406.2 replaces IBC Section 1405.1

3.2.7 FBC-B Section 1604.3 replaces IBC Section 1604.3.

3.2.8 FBC-B Section 1609.3.1 replaces IBC Section 1609.3.1.

3.2.9 FBC-B Section 2603.5 replaces IBC Section 2603.5.

3.2.10 FBC-B Section 2613.5 replaces IBC Section 2613.5.

4 Conditions of Use

4.1 Slotted-Z, described in Report Number 2210-01, must comply with all of the following conditions:

4.1.1 All applicable sections in Report Number 2210-01.

4.1.2 The design, installation, and inspections are in accordance with additional requirements of FBC-B Chapter 16 and Chapter 17, as applicable.

Notes

1 For more information, visit drjcertification.org or call us at 608-310-6748.

2 https://up.codes/viewer/wyoming/ibc-2021/chapter/17/special-inspections-and-tests#1702

3 Alternative Materials, Design and Methods of Construction and Equipment: The provisions of any regulation code are not intended to prevent the installation of any material or to prohibit any design or method of construction not specifically prescribed by a regulation. Please review https://www.justice.gov/atr/mission and https://up.codes/viewer/colorado/ibc-2021/chapter/1/scope-and-administration#104.11

4 https://up.codes/viewer/wyoming/ibc-2021/chapter/17/special-inspections-and-tests#1706:~:text=the%20design%20strengths%20and%20permissible%20stresses%20shall%20be%20established%20by%20tests%20as

5 The design strengths and permissible stresses of any structural material shall conform to the specifications and methods of design of accepted engineering practice. https://up.codes/viewer/wyoming/ibc-2021/chapter/17/special-inspections-and-tests#1706:~:text=shall%20conform%20to%20the%20specifications%20and%20methods%20of%20design%20of%20accepted%20engineering%20practice

6 https://up.codes/viewer/wyoming/ibc-2021/chapter/17/special-inspections-and-tests#1707.1:~:text=the%20building%20official%20shall%20accept%20duly%20authenticated%20reports%20from%20approved%20agencies

7 https://up.codes/viewer/wyoming/ibc-2021/chapter/17/special-inspections-and-tests#1703.4.2

8 https://up.codes/viewer/wyoming/ibc-2021/chapter/2/definitions#approved_agency

9 https://up.codes/viewer/wyoming/ibc-2021/chapter/2/definitions#approved_source

10 https://www.law.cornell.edu/uscode/text/18/1832 (b) Any organization that commits any offense described in subsection (a) shall be fined not more than the greater of $5,000,000 or 3 times the value of the stolen trade secret to the organization, including expenses for research and design and other costs of reproducing the trade secret that the organization has thereby avoided. The federal government and each state have a public records act. To follow DTSA and comply state public records and trade secret legislation requires approval through ANAB ISO/IEC 17065 accredited certification bodies or approved sources. For more information, please review this website: Intellectual Property and Trade Secrets.

11 https://www.nspe.org/resources/issues-and-advocacy/professional-policies-and-position-statements/regulation-professional AND https://apassociation.org/list-of-engineering-boards-in-each-state-archive/

12 https://www.cbitest.com/accreditation/

13 https://up.codes/viewer/colorado/ibc-2021/chapter/1/scope-and-administration#104:~:text=to%20enforce%20the%20provisions%20of%20this%20code

14 https://up.codes/viewer/colorado/ibc-2021/chapter/1/scope-and-administration#104.11:~:text=Where%20the%20alternative%20material%2C%20design%20or%20method%20of%20construction%20is%20not%20approved%2C%20the%20building%20official%20shall%20respond%20in%20writing%2C%20stating%20the%20reasons%20why%20the%20alternative%20was%20not%20approved AND https://up.codes/viewer/colorado/ibc-2021/chapter/1/scope-and-administration#105.3.1:~:text=If%20the%20application%20or%20the%20construction%20documents%20do%20not%20conform%20to%20the%20requirements%20of%20pertinent%20laws%2C%20the%20building%20official%20shall%20reject%20such%20application%20in%20writing%2C%20stating%20the%20reasons%20therefore

15 https://up.codes/viewer/colorado/ibc-2021/chapter/17/special-inspections-and-tests#1707.1:~:text=the%20building%20official%20shall%20accept%20duly%20authenticated%20reports%20from%20approved%20agencies%20in%20respect%20to%20the%20quality%20and%20manner%20of%20use%20of%20new%20materials%20or%20assemblies%20as%20provided%20for%20in%20Section%20104.11

16 https://iaf.nu/en/about-iaf-mla/#:~:text=it%20is%20required%20to%20recognise%20certificates%20and%20validation%20and%20verification%20statements%20issued%20by%20conformity%20assessment%20bodies%20accredited%20by%20all%20other%20signatories%20of%20the%20IAF%20MLA%2C%20with%20the%20appropriate%20scope

17 True for all ANAB accredited product evaluation agencies and all International Trade Agreements.

18 https://www.justice.gov/crt/deprivation-rights-under-color-law AND https://www.justice.gov/atr/mission

19 Unless otherwise noted, all references in this Listing are from the 2021 version of the codes and the standards referenced therein. This material, product, design, service and/or method of construction also complies with the 2000-2021 versions of the referenced codes and the standards referenced therein.

20 All references to the FBC-B and FBC-R are the same as the 2021 IBC and 2021 IRC unless otherwise noted in the Florida Supplement at the end of this report.

21 https://www.ecfr.gov/current/title-24/subtitle-B/chapter-XX/part-3280#p-3280.2(Listed%20or%20certified); https://up.codes/viewer/colorado/ibc-2021/chapter/2/definitions#listed AND https://up.codes/viewer/colorado/ibc-2021/chapter/2/definitions#labeled

22 https://up.codes/viewer/colorado/ibc-2021/chapter/17/special-inspections-and-tests#1703.4

23 https://www.ecfr.gov/current/title-24/subtitle-B/chapter-XX/part-3280#:~:text=All%20construction%20methods%20shall%20be%20in%20conformance%20with%20accepted%20engineering%20practices%20to%20insure%20durable%2C%20livable%2C%20and%20safe%20housing%20and%20shall%20demonstrate%20acceptable%20workmanship%20reflecting%20journeyman%20quality%20of%20work%20of%20the%20various%20trades

24 https://www.ecfr.gov/current/title-24/subtitle-B/chapter-XX/part-3280#:~:text=The%20strength%20and%20rigidity%20of%20the%20component%20parts%20and/or%20the%20integrated%20structure%20shall%20be%20determined%20by%20engineering%20analysis%20or%20by%20suitable%20load%20tests%20to%20simulate%20the%20actual%20loads%20and%20conditions%20of%20application%20that%20occur

25 Qualification is performed by a legislatively defined Accreditation Body. ANSI National Accreditation Board (ANAB) is the largest independent accreditation body in North America and provides services in more than 75 countries. DrJ is an ANAB accredited product certification body.

26 See Code of Federal Regulations (CFR) Title 24 Subtitle B Chapter XX Part 3280 for definition.

27 2018 IFC Section 104.9

28 Approved is an adjective that modifies the noun after it. For example, Approved Agency means that the Agency is accepted officially as being suitable in a particular situation. This example conforms to IBC/IRC/IFC Section 201.4 where the building code authorizes sentences to have an ordinarily accepted meaning such as the context implies.

29 https://up.codes/viewer/wyoming/ibc-2021/chapter/17/special-inspections-and-tests#1707.1

30 Multilateral approval is true for all ANAB accredited product evaluation agencies and all International Trade Agreements.

31 http://www.drjengineering.org/AppendixC AND https://www.drjcertification.org/cornell-2016-protection-trade-secrets

32 https://www.law.cornell.edu/uscode/text/18/1832#:~:text=imprisoned%20not%20more%20than%2010%20years

33 https://www.law.cornell.edu/uscode/text/18/1832#:~:text=Any%20organization%20that,has%20thereby%20avoided

34 https://up.codes/viewer/wyoming/ibc-2021/chapter/17/special-inspections-and-tests#1706.2

35 IBC 2021, Section 1706.1 Conformance to Standards

36 IBC 2021, Section 1707 Alternative Test Procedure, 1707.1 General

37 See **Section 11** for the distilled building code definition of **Approved**.

38 Los Angeles Municipal Code, SEC. 98.0503. TESTING AGENCIES

39 https://up.codes/viewer/california/ca-building-code-2022/chapter/17/special-inspections-and-tests#1707.1

40 New York City, The Rules of the City of New York, § 101-07 Approved Agencies

41 New York City, The Rules of the City of New York, § 101-07 Approved Agencies

42 https://up.codes/viewer/new_jersey/ibc-2018/chapter/17/special-inspections-and-tests#1707.1

43 https://www.nj.gov/dca/divisions/codes/codreg/ucc.html

44 https://www.ecfr.gov/current/title-24/subtitle-B/chapter-XX/part-3282/subpart-A/section-3282.14

45 https://www.ecfr.gov/current/title-24/subtitle-B/chapter-XX/part-3280

46 IBC 2021, Section 1706 Design Strengths of Materials, 1706.2 New Materials. Adopted law pursuant to IBC model code language 1706.2.

47 IBC 2021, Section 1707 Alternative Test Procedure, 1707.1 General. Adopted law pursuant to IBC model code language 1707.1.

48 https://www.nspe.org/resources/issues-and-advocacy/professional-policies-and-position-statements/regulation-professional AND https://apassociation.org/list-of-engineering-boards-in-each-state-archive/

49 IBC 2021, Section 1706 Design Strengths of Materials, Section 1706.1 Conformance to Standards Adopted law pursuant to IBC model code language 1706.1.

50 https://iaf.nu/en/about-iaf-mla/#:~:text=it%20is%20required%20to%20recognise%20certificates%20and%20validation%20and%20verification%20statements%20issued%20by%20conformity%20assessment%20bodies%20accredited%20by%20all%20other%20signatories%20of%20the%20IAF%20MLA%2C%20with%20the%20appropriate%20scope

51 True for all ANAB accredited product evaluation agencies and all International Trade Agreements.

52 https://www.justice.gov/crt/deprivation-rights-under-color-law AND https://www.justice.gov/atr/mission