Farabaugh Engineering and Testing Inc.

Project No. T299-24

Report Date: November 15, 2024

No. Pages: 14 (inclusive)

PERFORMANCE TEST REPORT

ASTM E330 UNIFORM LOAD STRUCTURAL TEST

ELITE RIB PANEL
36" WIDE COVERAGE X 26 GA.
(3 SPAN @ 4'-0" O.C. USING 14 GA. TUBE SUPPORTS)

FOR

ELITE METAL MANUFACTURING, LLC.
10121 88TH TRACE
LIVE OAK, FL. 32064

11/15/24

DANIEL G. FARABAUGH LICENSE No 48349 STATE OF FLORIDA PROFESSIONAL ENGINEER

Prepared by:

Paul G. Farabaugh

Approved by:

Daniel G. Farabaugh, P.E.

DANIEL G. FARABAUGH, P.E.
255 Saunders Station Rd
Trafford, PA 15085
412-417-5153

Purpose
The purpose of this test is to establish structural loading on the referenced test specimen in accordance with ASTM E330.

Test Completion Date
10/30/2024

Test Specimen
Manufacturer: Elite Metal Manufacturing LLC.
10121 88th Trace
Live Oak, FL. 32064

Test Specimen: Elite Rib Metal Panel 36" wide coverage x 26 ga.

Supports: 2.5" wide X 2.5" high X 14 ga. tube supports

Testing Apparatus
A vacuum test chamber was used with two static pressure taps located at diagonally opposite corners. A controlled blower provided a vacuum to uniformly load the specimen mock-up. Calibrated manometers were used to measure the pressure at each pressure tap. The uniform load pressure was performed in the positive and negative direction to monitor pressures on the panel specimen mock-up. Calibrated deflectometers were attached to monitor panel deformation as shown.

Test Procedure
The tests were conducted in accordance with ASTM E330/E330M-14, "Structural Performance of Exterior Windows, Doors, Skylights and Curtain Walls by Uniform Static Air Pressure Difference "and as provided herein. Note: Panels were tested in the positive and negative pressure direction.

Installation

- The panel were installed onto 2.5" X 2.5" X 14 ga. tube supports using #12-14 X 1" long, hex head, self-drilling fasteners with sealing washers at supports. The panel joint was a overlap for the panel lap. See fastening pattern for location of fasteners at ends supports and interior supports.

- 4 mil Plastic Sheeting was placed over top face of panel for the positive direction testing and then the panel had the plastic covering between the supports and the exposed back of the panel and tested in the negative direction

- See attached drawings showing test set-up and assembly details

TEST #1

Test Specimen: Elite Rib Metal Panel 36” wide coverage x 26 ga.

Support & Support Spacing: 14 ga. tubes 3 spans @ 4’ o/c

POSITIVE (DOWNWARD) PRESSURE

Load Pressure (in-h20)	Load Pressure (psf)	Deflection #1 (in)	Deflection #2 (in)	Deflection #3 (in)	Deflection #4 (in)	Deflection #5 (in)	Deflection #6 (in)
0	**0.0**	0.000	0.000	0.000	0.000	0.000	0.000
1	**5.2**	0.042	0.072	0.046	0.065	0.018	0.021
0	**0.0**	0.001	0.002	0.003	0.004	0.004	0.001
2	**10.4**	0.087	0.147	0.097	0.130	0.037	0.034
0	**0.0**	0.004	0.003	0.005	0.005	0.005	0.002
3	**15.6**	0.121	0.204	0.137	0.180	0.052	0.056
0	**0.0**	0.006	0.004	0.006	0.005	0.005	0.002
4	**20.8**	0.159	0.258	0.179	0.230	0.069	0.060
0	**0.0**	0.008	0.005	0.006	0.005	0.006	0.004
5	**26.0**	0.189	0.303	0.214	0.260	0.074	0.070
0	**0.0**	0.010	0.006	0.006	0.007	0.006	0.006
6	**31.2**	0.229	0.356	0.262	0.310	0.078	0.074
0	**0.0**	0.010	0.007	0.007	0.010	0.007	0.013
8	**41.6**	0.297	0.442	0.344	0.399	0.086	0.084
0	**0.0**	0.014	0.008	0.009	0.016	0.008	0.017
10	**52.0**	0.367	0.525	0.439	0.496	0.090	0.097
0	**0.0**	0.018	0.019	0.014	0.031	0.009	0.018

RESULTS:

Maximum Load held for 1 minute = 83.3 psf

Maximum Test Load at Failure= 84.5 psf (Panel buckling at end span)

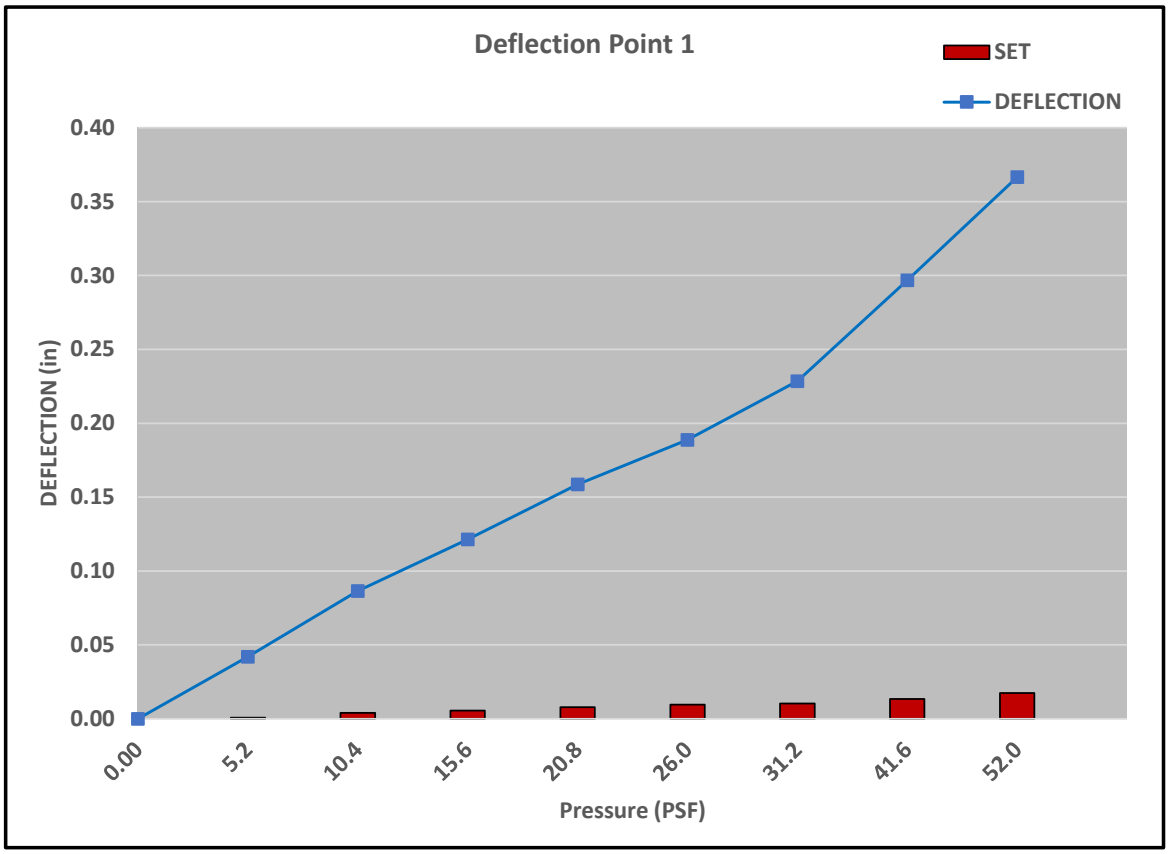
Deflection Point 1
SET
DEFLECTION
DEFLECTION (in)
0.40
0.35
0.30
0.25
0.20
0.15
0.10
0.05
0.00
0.00
5.2
10.4
15.6
20.8
26.0
31.2
41.6
52.0
Pressure (PSF)

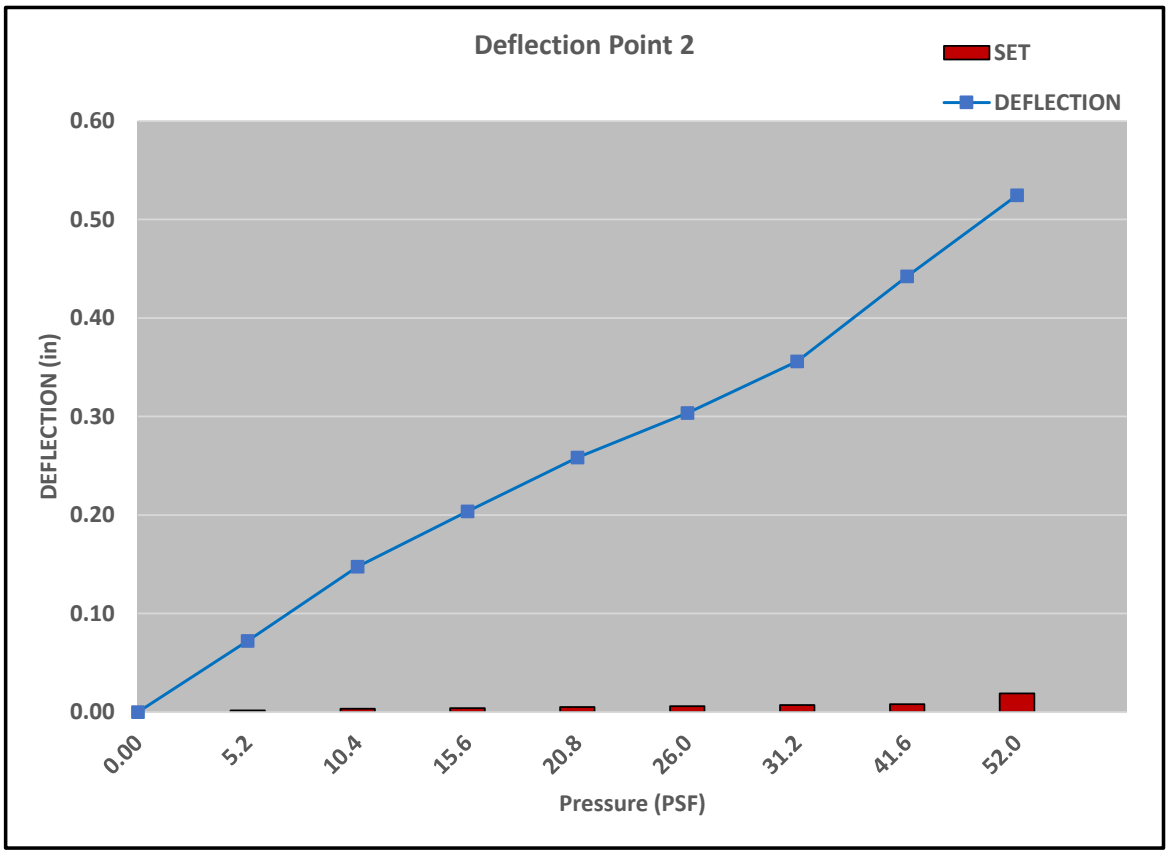
Deflection Point 2
SET
DEFLECTION
DEFLECTION (in)
0.60
0.50
0.40
0.30
0.20
0.10
0.00
0.00
5.2
10.4
15.6
20.8
26.0
31.2
41.6
52.0
Pressure (PSF)

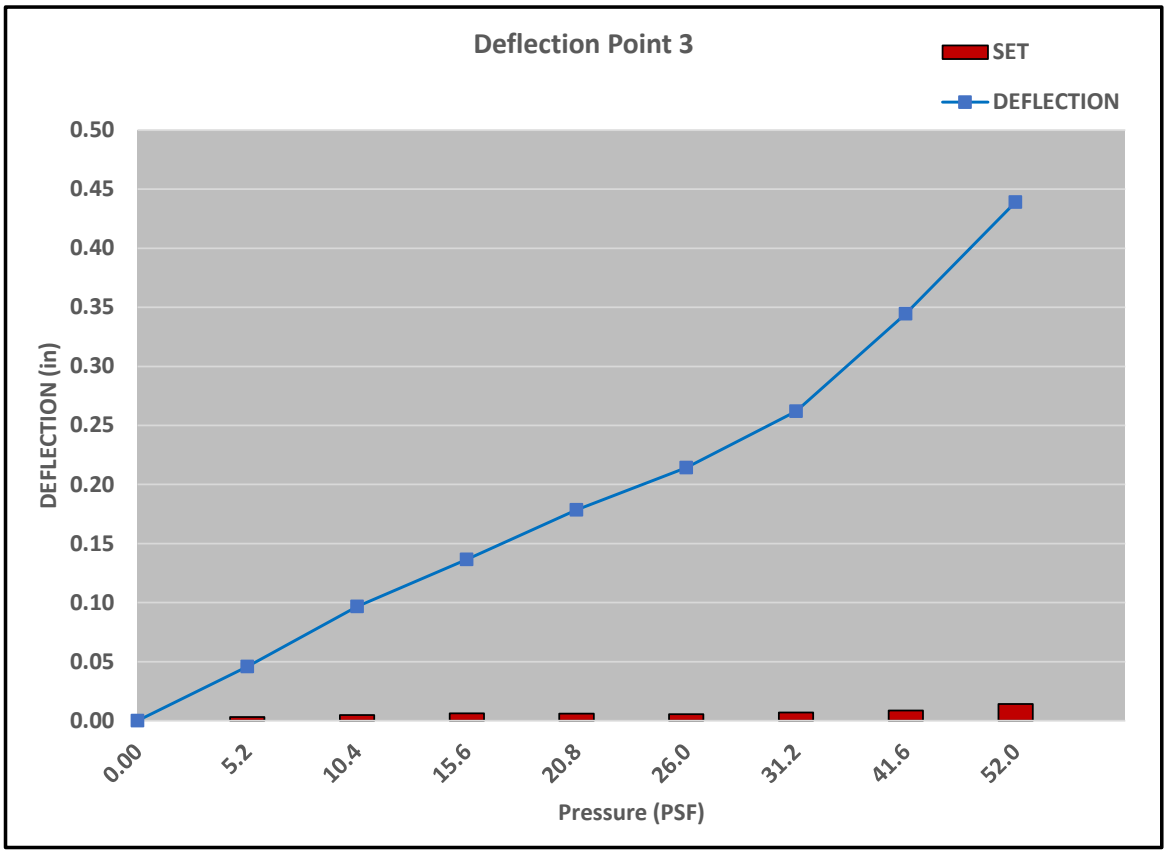
Deflection Point 3
SET
DEFLECTION
DEFLECTION (in)
0.50
0.45
0.40
0.35
0.30
0.25
0.20
0.15
0.10
0.05
0.00
0.00
5.2
10.4
15.6
20.8
26.0
31.2
41.6
52.0
Pressure (PSF)

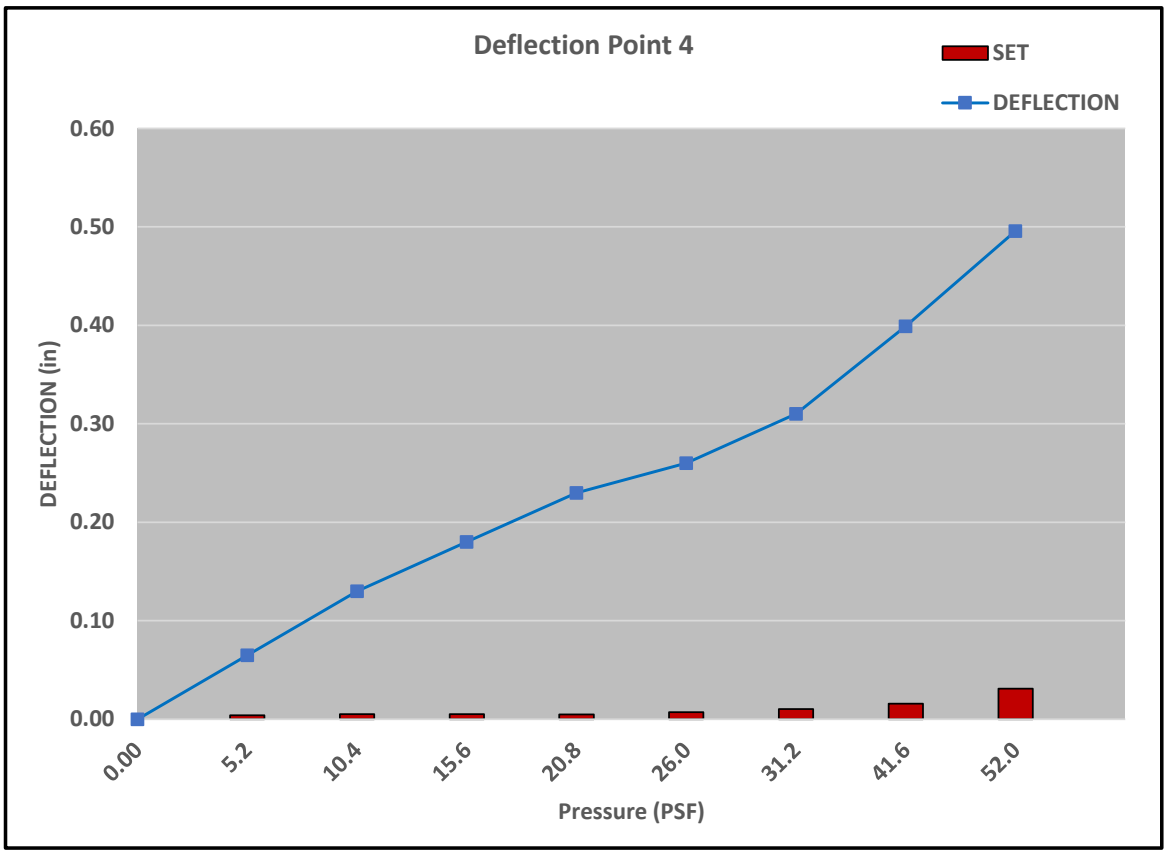
Deflection Point 4
SET
DEFLECTION
DEFLECTION (in)
0.60
0.50
0.40
0.30
0.20
0.10
0.00
0.00
5.2
10.4
15.6
20.8
26.0
31.2
41.6
52.0
Pressure (PSF)

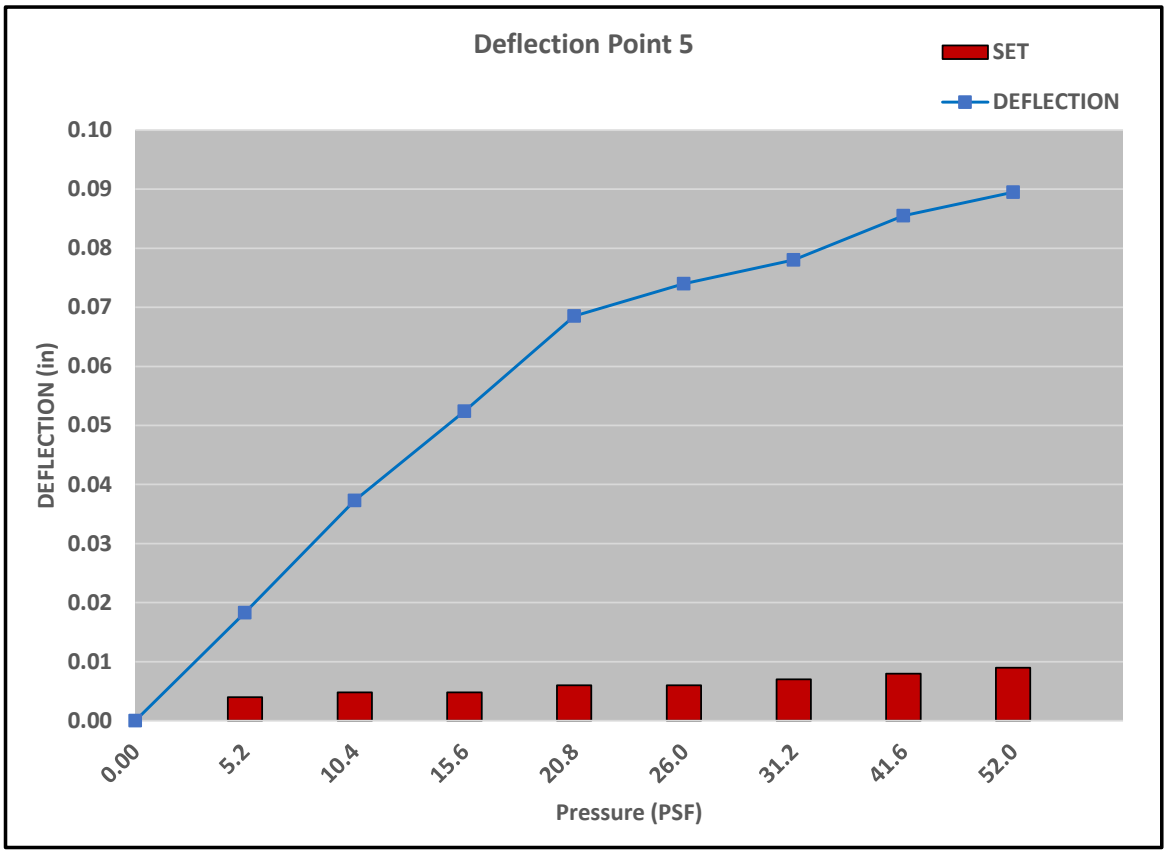
Deflection Point 5
SET
DEFLECTION
DEFLECTION (in)
0.10
0.09
0.08
0.07
0.06
0.05
0.04
0.03
0.02
0.01
0.00
0.00
5.2
10.4
15.6
20.8
26.0
31.2
41.6
52.0
Pressure (PSF)

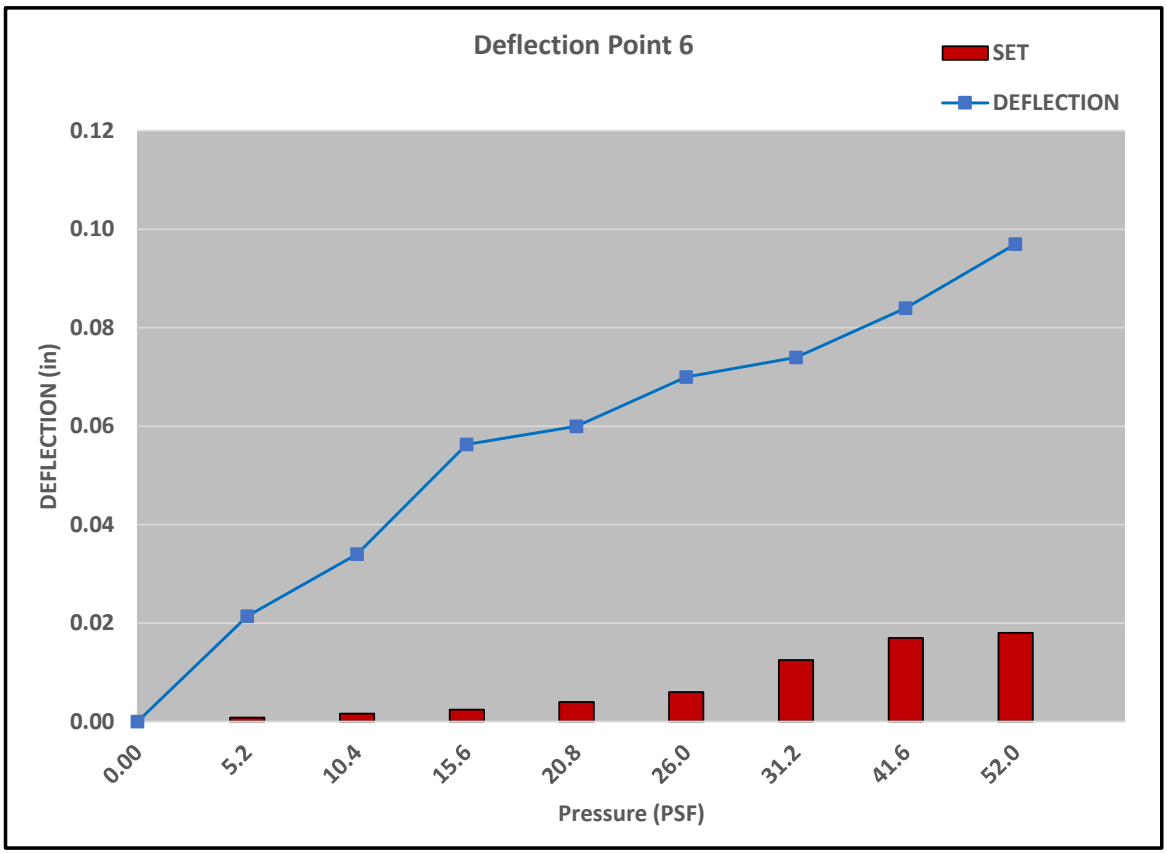
Deflection Point 6
SET
DEFLECTION
DEFLECTION (in)
0.12
0.10
0.08
0.06
0.04
0.02
0.00
0.00
5.2
10.4
15.6
20.8
26.0
31.2
41.6
52.0
Pressure (PSF)

TEST #2

Test Specimen: Elite Rib Metal Panel 36” wide coverage x 26 ga.

Support & Support Spacing: 14 ga. tubes 3 spans @ 4’ o/c

NEGATIVE (UPLIFT) PRESSURE

Load Pressure (in-h20)	Load Pressure (psf)	Deflection #1 (in)	Deflection #2 (in)	Deflection #3 (in)	Deflection #4 (in)	Deflection #5 (in)	Deflection #6 (in)
0	**0.0**	0.000	0.000	0.000	0.000	0.000	0.000
1	**5.2**	0.079	0.100	0.082	0.100	0.038	0.041
0	**0.0**	0.004	0.006	0.005	0.008	0.003	0.004
2	**10.4**	0.165	0.191	0.173	0.200	0.074	0.078
0	**0.0**	0.005	0.007	0.007	0.008	0.004	0.005
3	**15.6**	0.275	0.290	0.275	0.309	0.115	0.118
0	**0.0**	0.013	0.010	0.012	0.010	0.011	0.010
4	**20.8**	0.394	0.401	0.382	0.422	0.162	0.162
0	**0.0**	0.014	0.011	0.013	0.014	0.013	0.010
6	**31.2**	0.595	0.604	0.576	0.624	0.256	0.251
0	**0.0**	0.017	0.014	0.015	0.017	0.018	0.013
8	**41.6**	0.816	0.806	0.772	0.797	0.342	0.335
0	**0.0**	0.026	0.023	0.024	0.022	0.025	0.019
10	**52.0**	1.065	1.056	1.049	1.007	0.441	0.435
0	**0.0**	0.052	0.049	0.052	0.041	0.036	0.029

RESULTS:

Maximum Load held for 1 minute = 83.3 psf

Maximum Test Load at Failure= 84.8 psf (Panel buckling at end span)

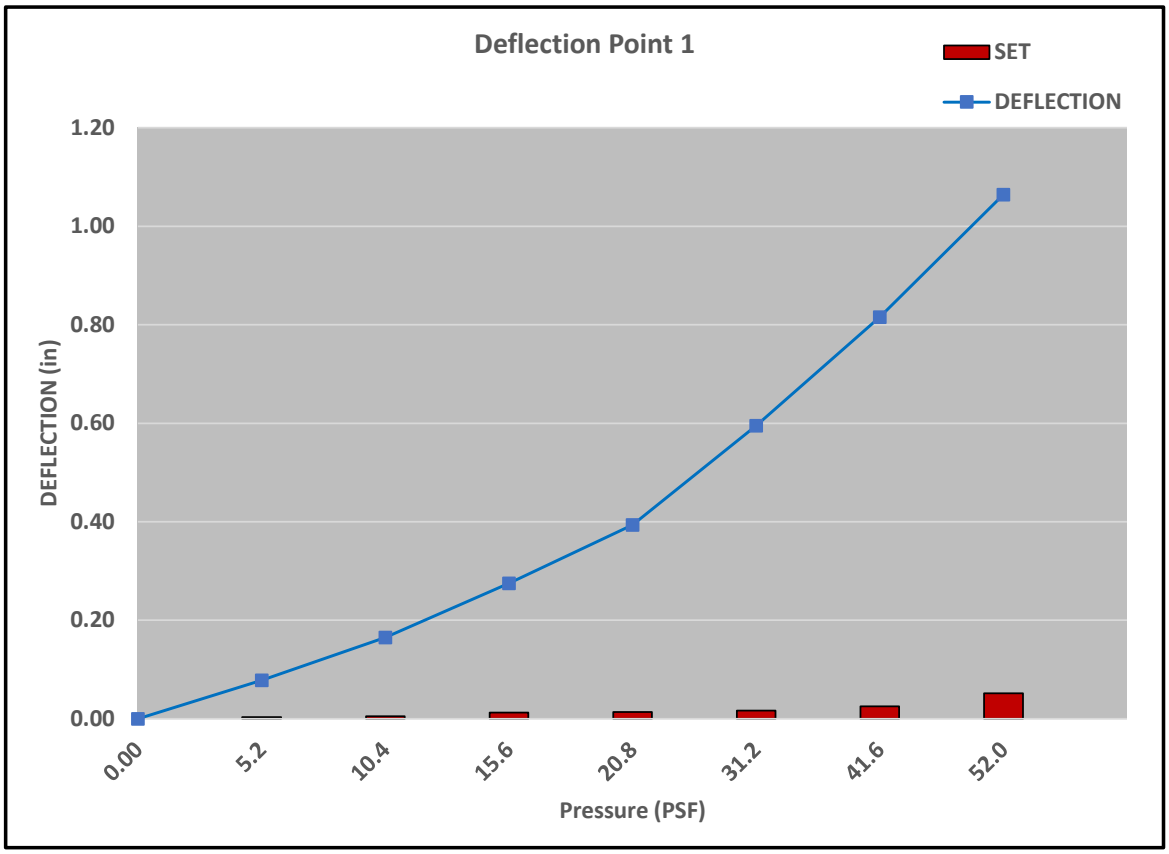
Deflection Point 1
SET
DEFLECTION
1.20
1.00
0.80
0.60
0.40
0.20
0.00
DEFLECTION (in)
0.00
5.2
10.4
15.6
20.8
31.2
41.6
52.0
Pressure (PSF)

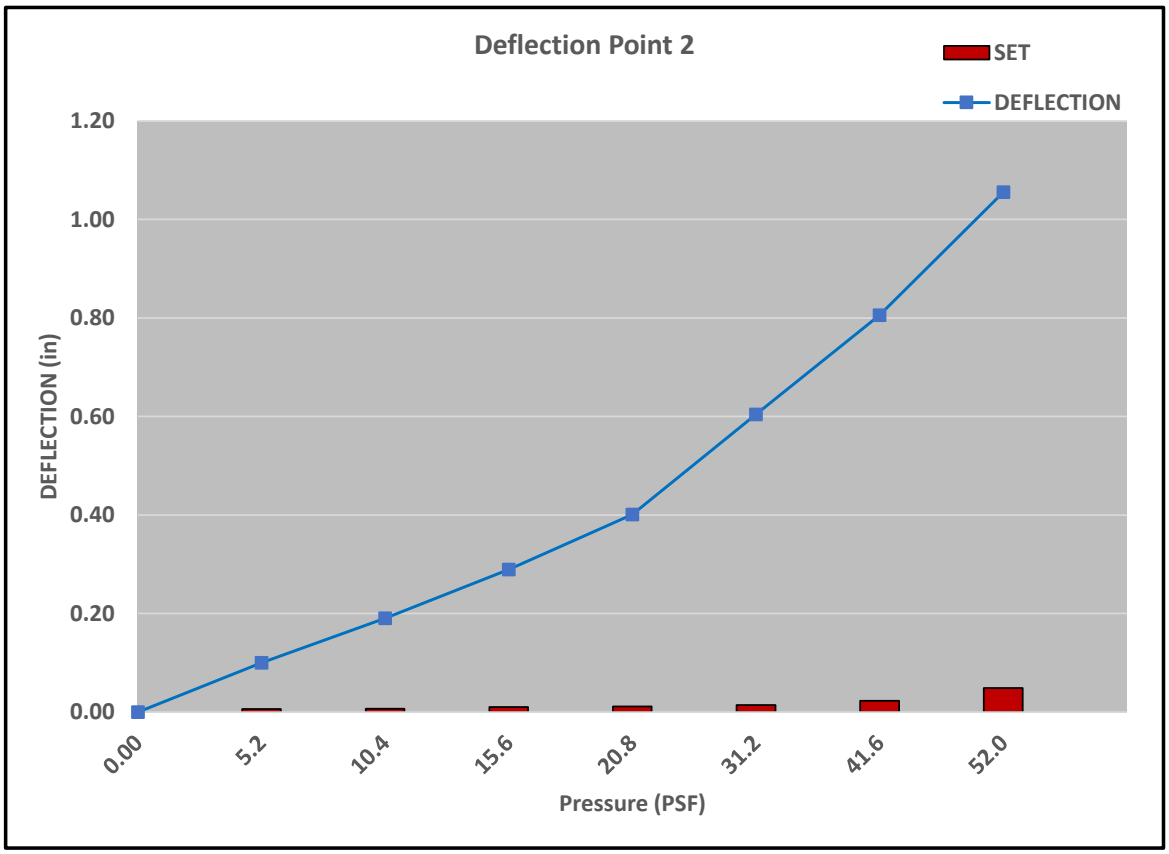
Deflection Point 2
SET
DEFLECTION
1.20
1.00
0.80
0.60
0.40
0.20
0.00
DEFLECTION (in)
0.00
5.2
10.4
15.6
20.8
31.2
41.6
52.0
Pressure (PSF)

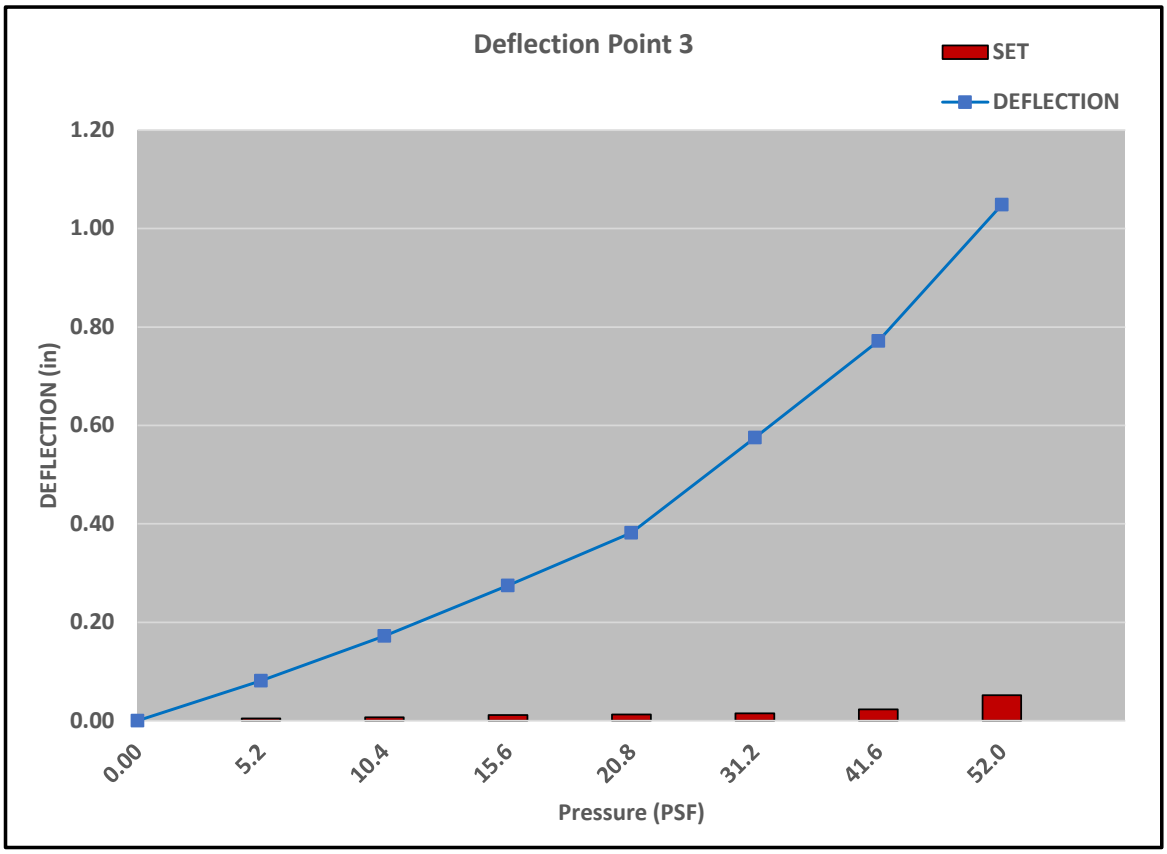
Deflection Point 3
SET
DEFLECTION
1.20
1.00
0.80
0.60
0.40
0.20
0.00
DEFLECTION (in)
0.00
5.2
10.4
15.6
20.8
31.2
41.6
52.0
Pressure (PSF)

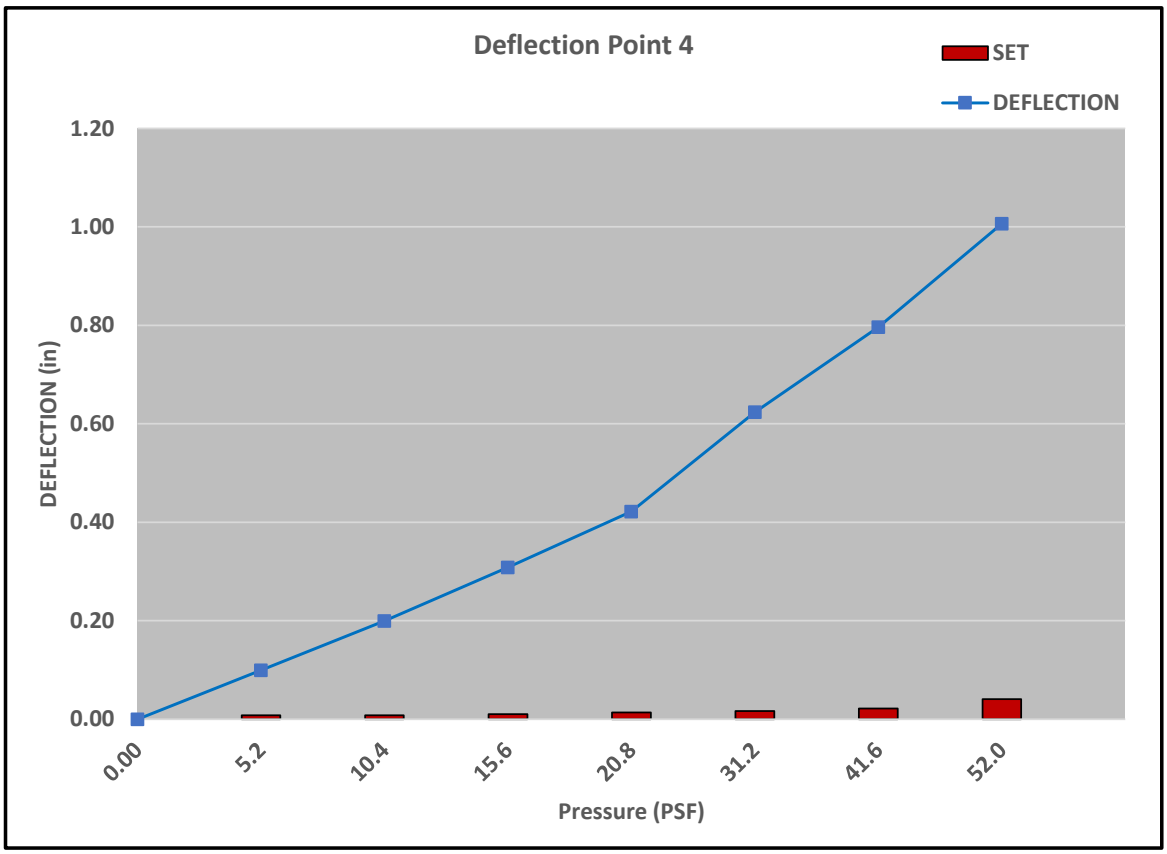
Deflection Point 4
SET
DEFLECTION
1.20
1.00
0.80
0.60
0.40
0.20
0.00
DEFLECTION (in)
0.00
5.2
10.4
15.6
20.8
31.2
41.6
52.0
Pressure (PSF)

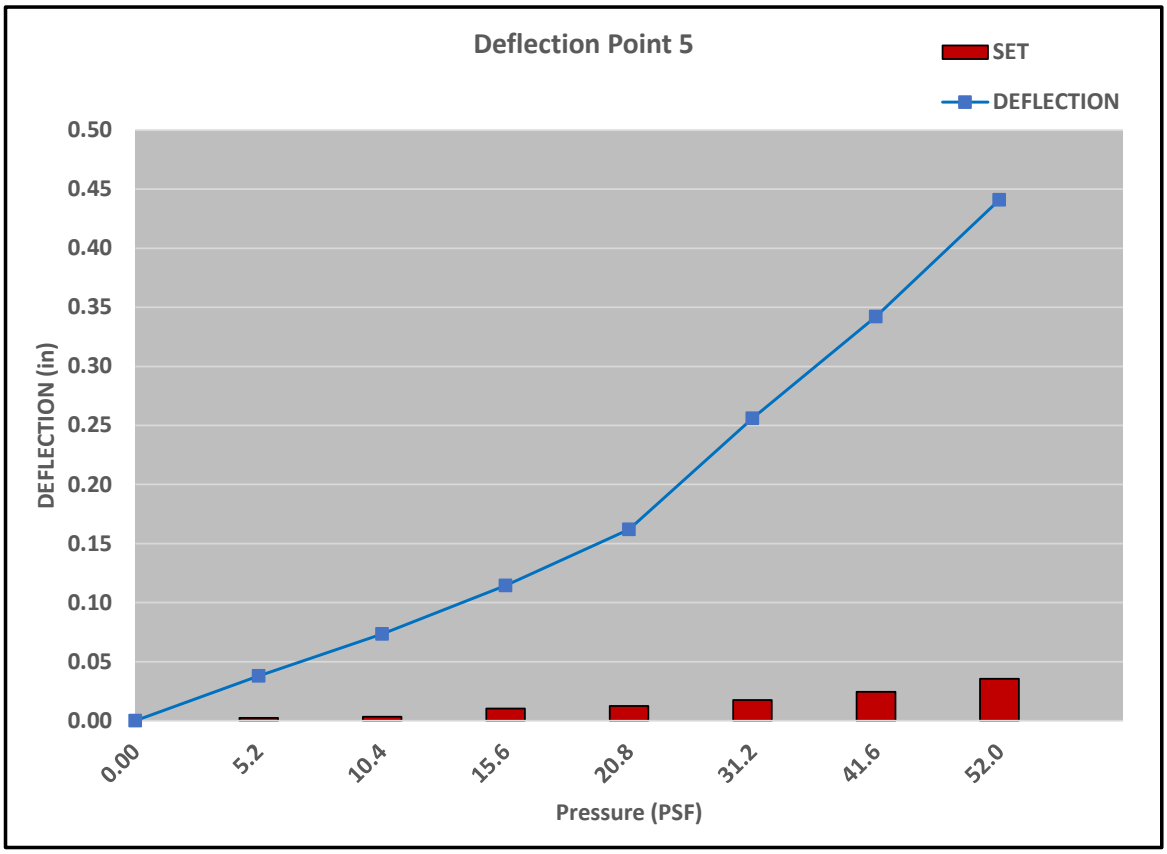
Deflection Point 5
SET
DEFLECTION
DEFLECTION (in)
0.50
0.45
0.40
0.35
0.30
0.25
0.20
0.15
0.10
0.05
0.00
0.00
5.2
10.4
15.6
20.8
31.2
41.6
52.0
Pressure (PSF)

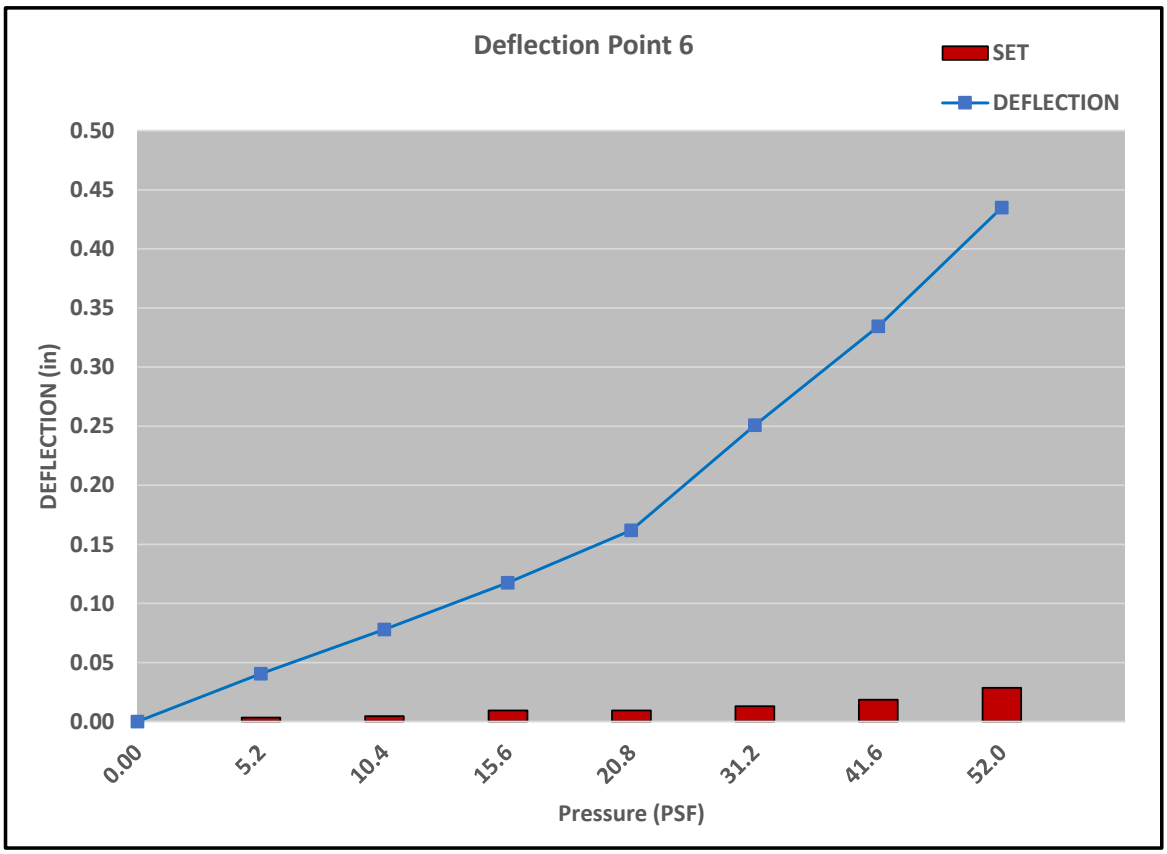
Deflection Point 6
SET
DEFLECTION
DEFLECTION (in)
0.50
0.45
0.40
0.35
0.30
0.25
0.20
0.15
0.10
0.05
0.00
0.00
5.2
10.4
15.6
20.8
31.2
41.6
52.0
Pressure (PSF)

TEST SETUP

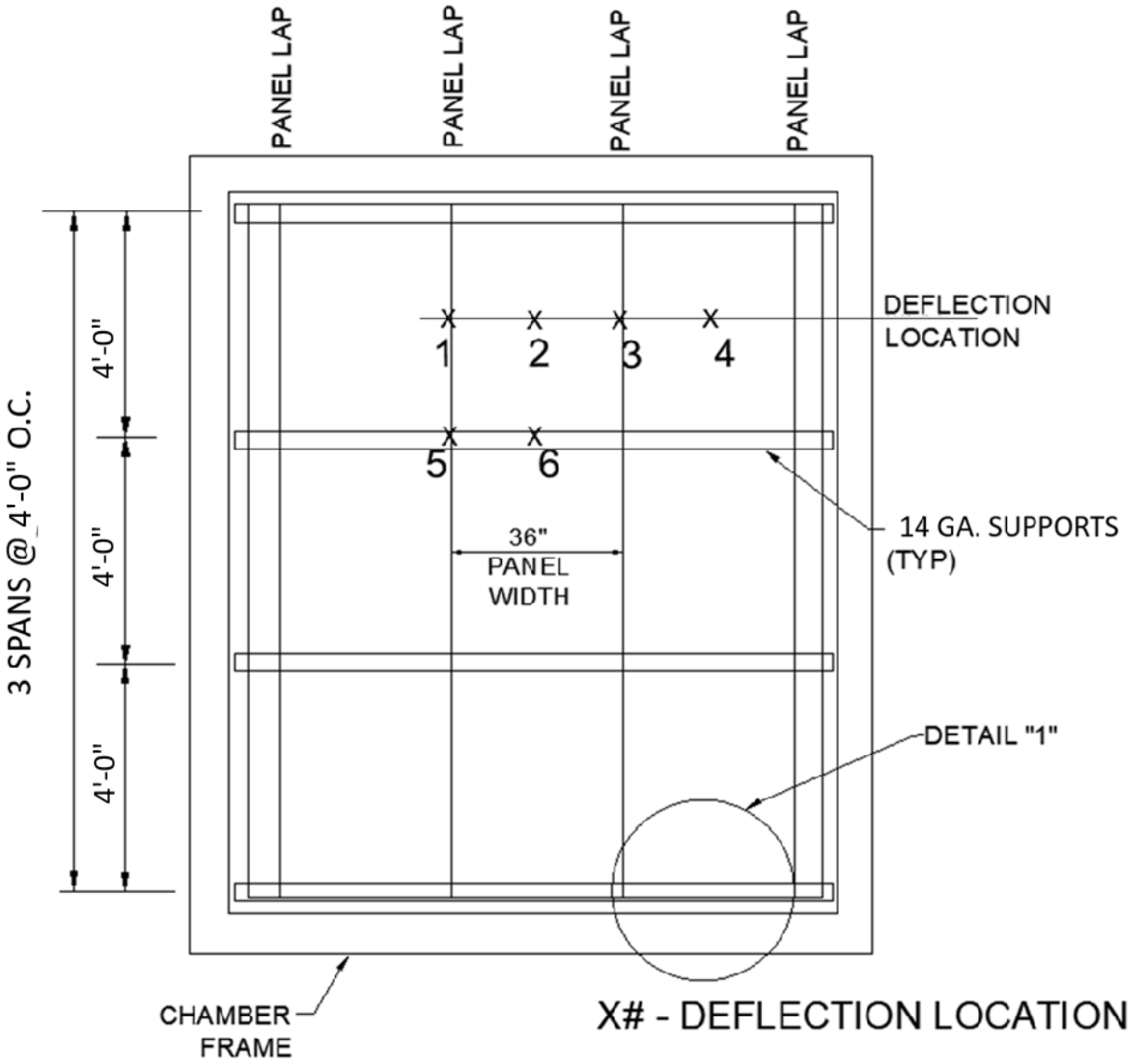
PANEL LAP
PANEL LAP
PANEL LAP
PANEL LAP
DEFLECTION LOCATION
1
2
3
4
5
6
4'-0"
4'-0"
4'-0"
3 SPANS @ 4'-0" O.C.
36" PANEL WIDTH
14 GA. SUPPORTS (TYP)
DETAIL "1"
CHAMBER FRAME
X# - DEFLECTION LOCATION

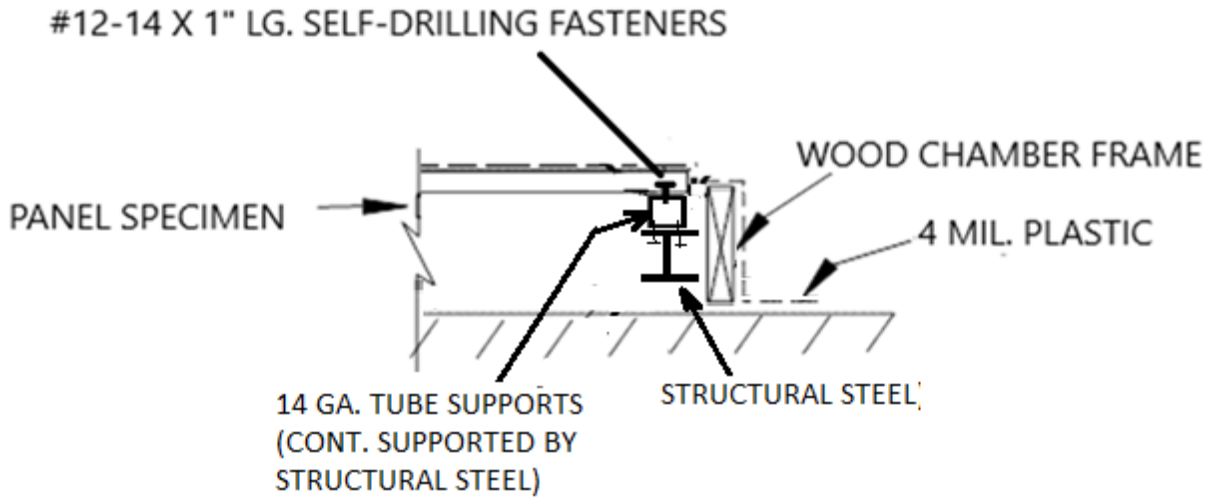

DETAIL "1"

(POSITIVE PRESSURE)

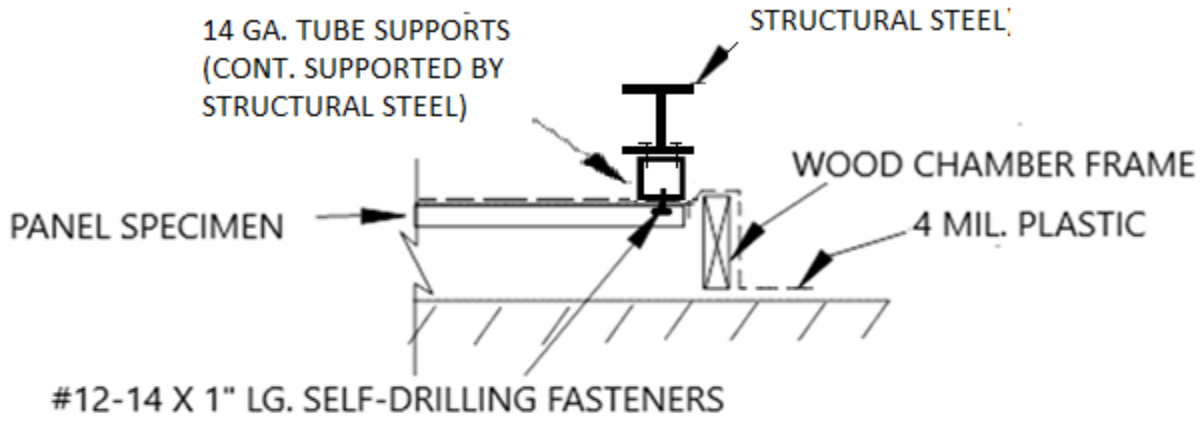

DETAIL "1"

(NEGATIVE PRESSURE)

ELITE RIB PANEL

STRIP WIDTH = 40.875

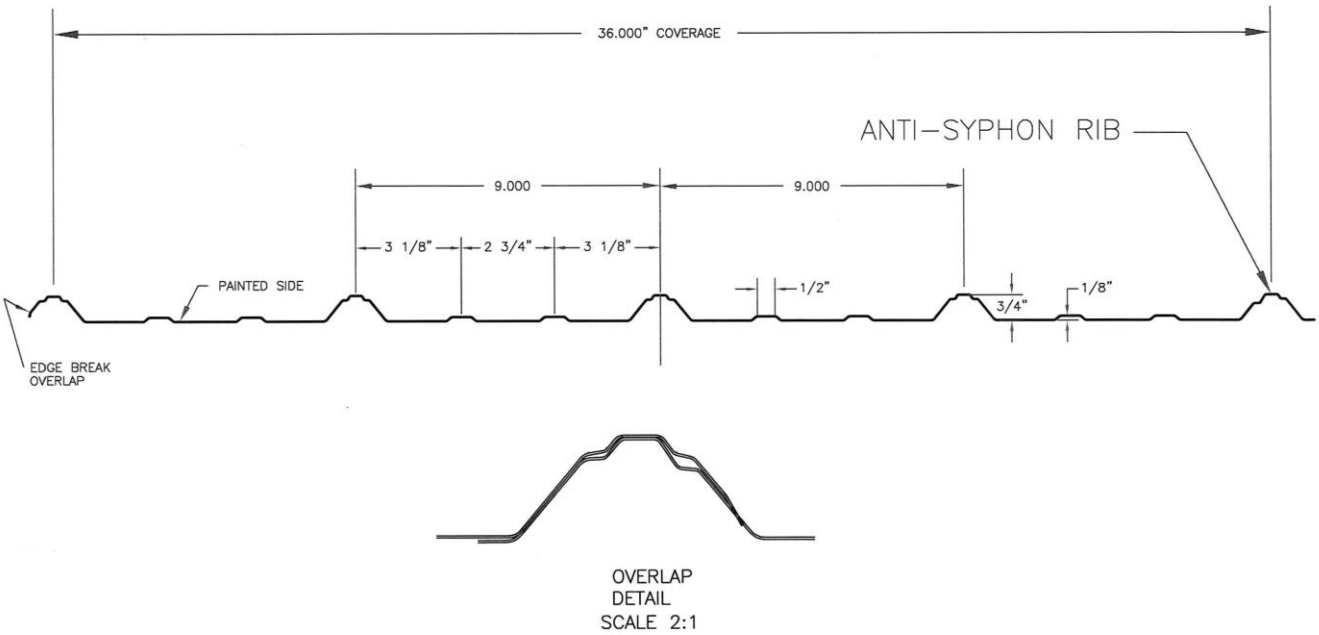

ELITE RIB PANEL

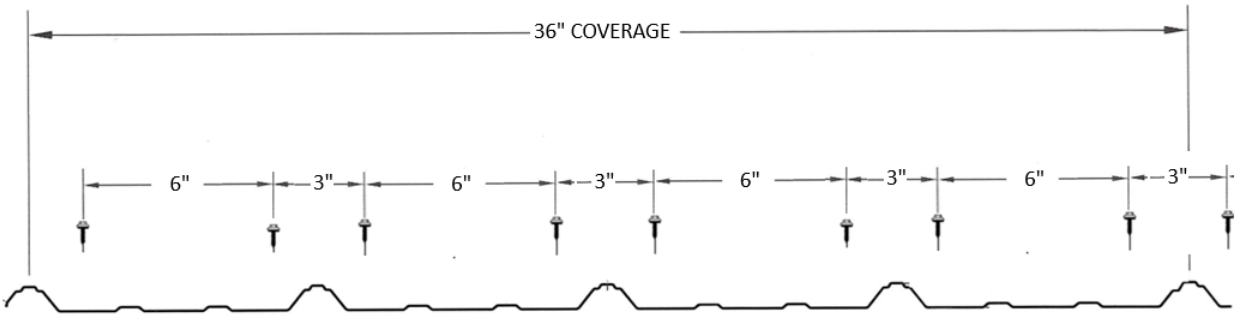

6-3-6-3-6-3-6-3 PATTERN AT ALL SUPPORTS

TENSILE TEST REPORT

Manufacturer: Elite Metal Manufacturing LLC.
10121 88th Trace
Live Oak, FL. 32064

Test Specimen: Elite Rib Metal Panel 36” wide coverage x 26 ga.

Test Date: November 7, 2024

Test Method: ASTM A370-10

Sample No.	Width (in)	Thickness (in)	Yield Load (lb)	Max. Load (lb)	0.2% Offset Yield Strength (psi)	Tensile Strength (psi)	Elongation (% in 2 inches)
24122	0.506	0.017	473.49	516.03	55,044	59,990	22.5

Equipment Used: Tensile Machine #QT7-061196-020
Caliper #1074379
Extensometer #10311744D
Micrometer #110596927

Revision Log

Rev. #	Date	Page(s)	Revision(s)
0	11/15/24	N/A	Original report issue.