EVALUATION REPORT OF
BETCO INC.'S
'SS200 PANEL'

FLORIDA BUILDING CODE 8TH EDITION (2023)
FLORIDA PRODUCT APPROVAL
FL 46689.1
STRUCTURAL COMPONENTS
ROOF DECK

Prepared For:
BETCO Inc.
228 Commerce Blvd
Statesville, NC 28625
Telephone: (704) 872-2999

Prepared By:
Bala Sockalingam, Ph.D., P.E.
Florida Professional Engineer #62240
1216 N Lansing Ave., Suite C
Tulsa, OK 74106
Telephone: (918) 492-5992

This report consists of
Evaluation Report (3 Pages including cover)
Installation Details (1 Page)
Load Span Tables (3 Pages)

Report No. C2789-1
Date: 4.26.2024

This item has been digitally signed and sealed by Bala Sockalingam, PE, on the date indicated.

Printed copies of this document are not considered signed and sealed and this signature must be verified on any electronic copies.

2024.04.26
18:05:06 -05'00'

Manufacturer:	BETCO Inc.
Product Name:	SS200 Panel
Panel Description:	Standing seam panel with max. 18.25" wide coverage and 2" high ribs
Materials:	Min 24 ga. with galvalume coated steel (ASTM A792) or painted steel (ASTM A755) (F_y = 50 ksi). Corrosion resistant as per FBC 2023 Section 1507.4.3.
Support Description:	Min 16 ga., 50 ksi steel section (Must be designed by others)
Slope:	1/4:12 or greater in accordance with FBC 2023 Section 1507.4.2
Design Uplift Pressure: (Factor of Safety: 2)	Panel Seam: 180° 31.5 psf at NC-3300 sliding clip spacing of 60" o.c. 64.0 psf at NC-3300 sliding clip spacing of 30" o.c. 74.0 psf at NC-3300 sliding clip spacing of 24" o.c. 47.1 psf at NC-3300 sliding clip and clamp spacing of 60" o.c. 120.0 psf at NC-3300 sliding clip and clamp spacing of 24" o.c. 30.0 psf at NCF-3300 fixed clip spacing of 60" o.c. 60.0 psf at NCF-3300 fixed clip spacing of 30" o.c.
Panel Attachment:	NC-33001 or NC-33002 sliding clip (22 ga. tab with 16 ga. base) with (2) #12-14 x 1-1/2" long self-drilling screws per clip at each support. NCF-33005 or NCF-33006 fixed clip (22 ga., 3.25" wide) with (3) #10-24 x 5/8" long pancake head self-drilling screws per clip at each support. Clips and fasteners are corrosion resistant as per FBC 2023 Section 1506.7 and 1507.4.4, respectively.
Seam Wind Clamp:	S-5! DL Wind Clamp at panel clip location (optional)
Test Standards:	Roof assembly tested in accordance with ASTM E1592-05(2017) 'Test Method for Structural Performance of Sheet Metal Roof and Siding Systems by Uniform Static Air Pressure Difference' and FM 4470 Section 4.6 'Resistance to Foot Traffic'.
Code Compliance:	The product described herein has demonstrated compliance with FBC 2023 Section 1507.4.
Product Limitations:	Design wind loads shall be determined for each project in accordance with FBC 2023 Section 1609 or ASCE 7-22 using allowable stress design. The design uplift pressure for reduced clip spacing may be computed using rational analysis prepared by a Florida Professional Engineer or based on BETCO's load span tables. This evaluation report is not applicable in High Velocity Hurricane Zone. Fire classification

is not within the scope of this Evaluation Report. Refer to FBC 2023 Section 1505 and current approved roofing materials directory or ASTM E108/UL790 report from an accredited laboratory for fire ratings of this product.

Supporting Documents: ASTM E1592 Test Report
ENCON Technology Inc.
C2362-1, Reporting Date 10/5/2023
C2781-1, Reporting Date 4/9/2024

FM 4470 Test Report
ENCON Technology Inc.
C2541-1, Reporting Date 2/9/2022

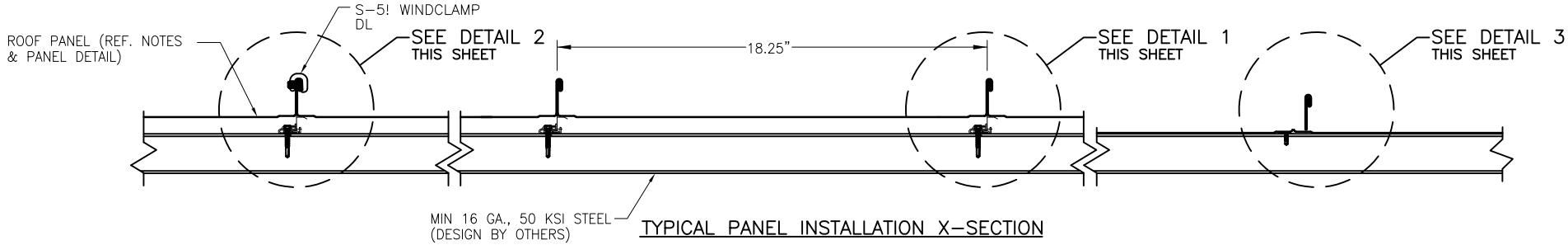

TYPICAL PANEL INSTALLATION X-SECTION

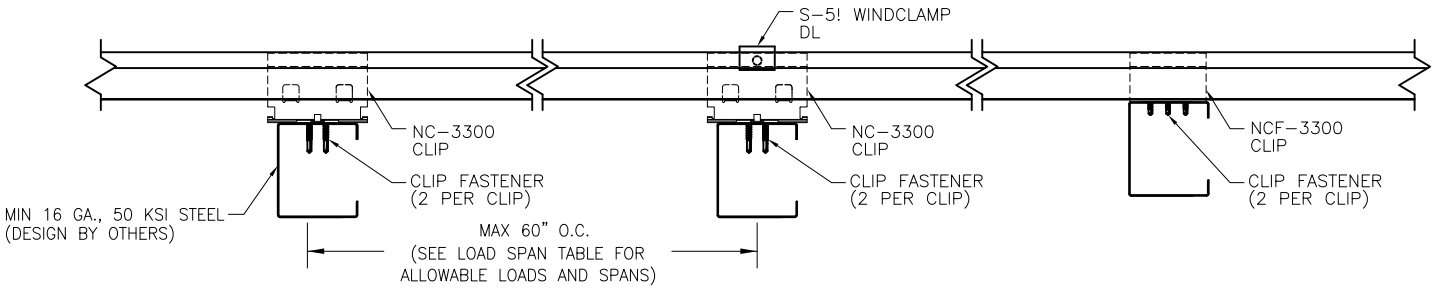

TYPICAL SIDE VIEW

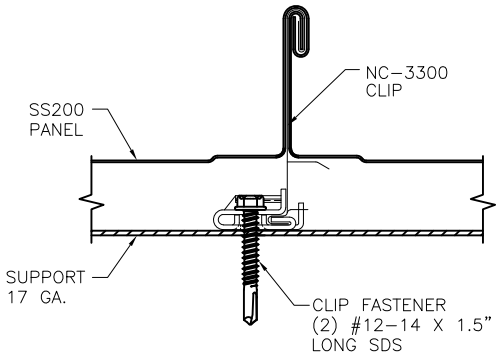

DETAIL 1: NC-3300 CLIP

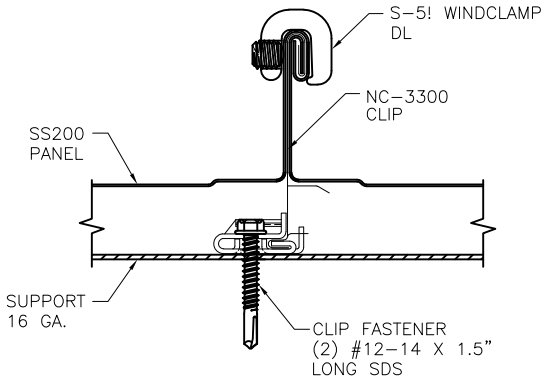

DETAIL 2: NC-3300 CLIP WITH CLAMP

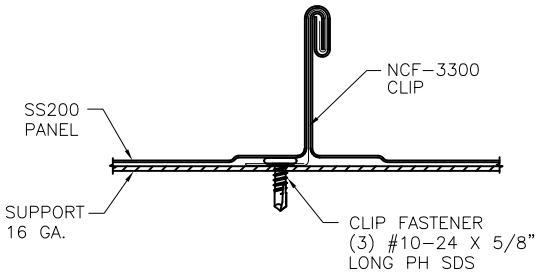

DETAIL 3: NCF-3300 CLIP

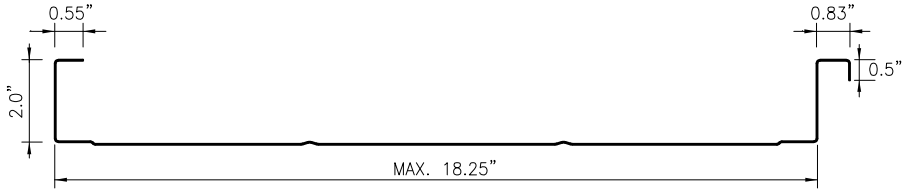

PANEL SECTION
(MIN 24 GA.)

GENERAL NOTES:

1. STRUCTURAL ROOF PANEL HAS BEEN DESIGNED IN ACCORDANCE WITH THE FLORIDA BUILDING CODE (FBC).
2. ROOF PANELS SHALL BE 24 GA. (t = 0.022"). EFFECTIVE COVERING WIDTH OF PANEL = 18.25".
3. ROOF PANELS SHALL BE INSTALLED OVER STRUCTURE AS SPECIFIED ON THIS DRAWING.
4. REQUIRED DESIGN WIND LOADS SHALL BE DETERMINED FOR EACH PROJECT. THIS PANEL SYSTEM MAY NOT BE INSTALLED WHEN THE REQUIRED DESIGN WIND LOADS ARE GREATER THAN THE ALLOWABLE DESIGN LOADS.
5. CLIPS AND FASTENERS MUST BE IN ACCORDANCE WITH THIS DRAWING & FLORIDA BUILDING CODE. IF A DIFFERENCE OCCURS BETWEEN THE MINIMUM REQUIREMENTS OF THIS DRAWING & THE CODE, THE CODE SHALL CONTROL.
6. SUPPORTS MUST BE DESIGNED TO WITHSTAND WIND LOADS AS REQUIRED FOR EACH APPLICATION AND ARE THE RESPONSIBILITY OF OTHERS.

DRAWN BY: B.S.	CHECKED BY: R.S.
PLOT:	DATE: 4/19/2024

NO.	REVISION DESCRIPTION	BY	DATE

DRAWING TITLE
SS200 STANDING SEAM ROOF PANEL

MANUFACTURER
BETCO INC.
228 COMMERCE BLVD
STATESVILLE, NC 28625
704-872-2999

CONSULTANTS
BALA SOCKALINGAM, PH.D., P.E.
1216 N LANSING AVE, SUITE C
TULSA, OK 74106
PHONE: 918-492-5992 FAX: 866-366-1543

DRAWING NO. 2789-1
REV.

PAGE NO. 1 OF 1

BETCO INC
SS200 Panel with NC-3300 Sliding Clips
Allowable Uplift Loads

Description	Fastener Spacing along panel length (in)	Allowable Uplift Load (psf)
SS200 Panel	**24**	**74.0**
	26	70.7
Min. 24 ga.	28	67.3
Maximum 18.25" wide	**30**	**64.0**
	32	60.0
	34	56.5
	36	53.3
NC-3300 Sliding Clips with	38	50.5
(2) #12-14 x1.5" long SDS	40	48.0
	42	45.7
	44	43.6
	46	41.7
	48	40.0
	50	38.4
Support	52	36.9
Min 16 ga.	54	35.6
	56	34.3
	58	33.1
	60	**31.5**

Notes:

1. The bold numbers indicate design loads calculated from test data with safety factor of 2.
2. Panels must be installed as per Evaluation Report FL 46689.1 and BETCO current installation procedure.

1216 N Lansing Ave., Suite C
Tulsa, Ok 74106
918 492 5992

Bala Sockalingam, Ph.D., P.E.

BETCO INC
SS200 Panel with NC-3300 Sliding Clips and S-5! DL Wind Clamp
Allowable Uplift Loads

Description	Fastener Spacing along panel length (in)	Allowable Uplift Load (psf)
SS200 Panel	**24**	**120.0**
	26	110.8
Min. 24 ga.	28	102.9
Maximum 18.25" wide	30	96.0
	32	90.0
	34	84.7
NC-3300 Sliding Clips with	36	80.0
(2) #12-14 x1.5" long SDS	38	75.8
	40	72.0
	42	68.6
S-5! DL Wind Clamp at	44	65.5
panel clip location	46	62.6
	48	60.0
	50	57.6
Support	52	55.4
Min 16 ga.	54	53.3
	56	51.4
	58	49.7
	60	**47.1**

Notes:

1. The bold numbers indicate design loads calculated from test data with safety factor of 2.
2. Panels must be installed as per Evaluation Report FL 46689.1 and BETCO current installation procedure.

1216 N Lansing Ave., Suite C
Tulsa, Ok 74106
918 492 5992

Bala Sockalingam, Ph.D., P.E.

BETCO INC
SS200 Panel with NCF-3300 Fixed Clips
Allowable Uplift Loads

Description	Fastener Spacing along panel length (in)	Allowable Uplift Load (psf)
SS200 Panel	**30**	**60.0**
	32	56.3
Min. 24 ga.	34	52.9
Maximum 18.25" wide	36	50.0
	38	47.4
	40	45.0
	42	42.9
NCF-3300 Fixed Clips with	44	40.9
(3) #10-24 x 5/8" long PH SDS	46	39.1
	48	37.5
	50	36.0
Support	52	34.6
Min 16 ga.	54	33.3
	56	32.1
	58	31.0
	60	**30.0**

Notes:

1. The bold numbers indicate design loads calculated from test data with safety factor of 2.
2. Panels must be installed as per Evaluation Report FL 46689.1 and BETCO current installation procedure.

1216 N Lansing Ave., Suite C
Tulsa, Ok 74106
918 492 5992

Bala Sockalingam, Ph.D., P.E.