NEMO|etc.
Certificate of Authorization #32455
353 Christian Street, Unit #13
Oxford, CT 06478
(203) 262-9245

ENGINEER **TEST** **CONSULT**

P.E. EVALUATION REPORT (PEER)

GAF
1 Campus Drive
Parsippany, NJ 07054
(800) 766-3411

PEER-GAF-013.B.R1
FL46590-R2 (HVHZ)
Date of Issuance: 10/20/2025
Revision 1: 08/10/2026

SCOPE:
This P.E. Evaluation Report (henceforth 'PEER') is issued under **Rule 61G20-3** and the applicable rules and regulations governing the use of construction materials in the State of Florida. The documentation submitted has been reviewed by Robert Nieminen, P.E. for compliance with the **9th Edition (2026) Florida Building Code, High Velocity Hurricane Zone (HVHZ)** sections referenced herein.

DESCRIPTION: TimberSteel™ Metal Roof Shingles (HVHZ)

LABELING: Labeling shall be in accordance with the requirements of the Accredited Quality Assurance Agency noted herein and **FBC 1523.5**.

CONTINUED COMPLIANCE: This PEER is valid until such time as the named product(s) changes, the referenced Quality Assurance or production facility location(s) changes, or Code provisions that relate to the product(s) change. Acceptance of our PEERs by the named client constitutes agreement to notify NEMO ETC, LLC of any changes to the product(s), the Quality Assurance or the production facility location(s). NEMO ETC, LLC requires a complete review of its PEER relative to updated Code requirements with each Code Cycle. Reference is made to the NEMO|etc. Directory of P.E. Evaluations to ascertain the status and/or current version of this PEER. If the PEER is not listed at the Nemo Directory, then it is no longer valid.

ADVERTISEMENT: "NEMO P.E. Evaluated" may be displayed in advertising literature. If any portion of the PEER is displayed, then it shall be in its entirety.

INSPECTION: Upon request, a copy of this entire PEER shall be provided to the user by the manufacturer or its distributors and shall be available for inspection at the job site at the request of the Building Official.

This PEER consists of pages 1 through 5.

Prepared by:

Digitally signed by Robert Nieminen
Date: 2026.08.10 '12:47:19 -04'00'

This item has been digitally signed and sealed by Robert Nieminen, P.E.
Printed copies of this document are not considered signed and sealed, and the signature must be verified on any electronic copies.
Robert Nieminen, Florida P.E. 59166, FBC ANE1983
NEMO ETC, LLC, Florida CA #32455

ROBERT NIEMINEN
LICENSE
NO. 59166
STATE OF FLORIDA
PROFESSIONAL ENGINEER

CERTIFICATION OF INDEPENDENCE:

1. NEMO ETC, LLC does not have, nor does it intend to acquire or will it acquire, a financial interest in any company manufacturing or distributing products it evaluates.
2. NEMO ETC, LLC is not owned, operated or controlled by any company manufacturing or distributing products it evaluates.
3. Robert Nieminen, P.E. does not have nor will acquire, a financial interest in any company manufacturing or distributing products for which the PEERs are being issued.
4. Robert Nieminen, P.E. does not have, nor will acquire, a financial interest in any other entity involved in the approval process of the product.
5. This is a building code evaluation. Neither NEMO ETC, LLC nor Robert Nieminen, P.E. are, in any way, the Designer of Record for any project on which this PEER, or previous versions thereof, is/was used for permitting or design guidance unless retained specifically for that purpose.

©2019 NEMO ETC, LLC

2026 FBC HVHZ

ROOFING SYSTEMS EVALUATION:

1. SCOPE:

Product Category: Roofing
Sub-Category: Non-Structural Metal Roofing

Compliance Statement: TimberSteel™ Metal Roof Shingles, as produced by **GAF**, have demonstrated compliance with the following sections of the **9th Edition (2026) Florida Building Code, High Velocity Hurricane Zone (HVHZ)** through testing in accordance with the following Standards. Compliance is subject to the Installation Requirements and Limitations of Use set forth herein.

2. STANDARDS:

SECTION	PROPERTY	STANDARD
1518.9	Material standard	ASTM A653, A792
TAS 110	Physical properties (salt spray)	ASTM B117
TAS 110	Accelerated weathering	ASTM G155
1523.6.5.2.4.1, TAS 110	Wind driven rain	TAS 100
1523.6.5.2.4.1, TAS 110	Wind resistance (uplift)	TAS 125

3. REFERENCES:

ENTITY	EXAMINATION	REFERENCE	DATE
ITS (TST1558)	TAS 125	S9186.01-109-18	10/06/2025
PRI (TST5878)	TAS 100	376T0530	08/22/2024
PRI (TST5878)	TAS 125	376T0608	03/10/2025
Metal suppliers	ASTM A653	Mill Certs	07/01/2019
Metal suppliers	ASTM A792	Mill Certs	11/29/2024
Metal suppliers	ASTM A792	Mill Certs	01/02/2025
Coating supplier (A2LA 1176)	ASTM B117, G154	Various	Various
UL (QUA 9625)	Quality Assurance	Service Confirmation	01/16/2024
UL (QUA 9625)	Quality Assurance	Florida BCIS	Current

4. PRODUCT DESCRIPTION:

TimberSteel™ Metal Roof Shingles are 24 ga. or 26 ga., 60-ksi yield, pressure-formed, coated Galvalume® sheet-steel shingles with factory-formed interlocking upper-to-lower edges and a textured top-surface, which are mechanically attached over approved roof decks. The 24 ga. and 26 ga. shingles differ only in the upper-to-lower locking mechanism. The right edge includes a factory-applied butyl adhesive strip. Full shingles measure nominal 10.8 x 40-inches and half-shingles measure nominal 10.8 x 21-inches.

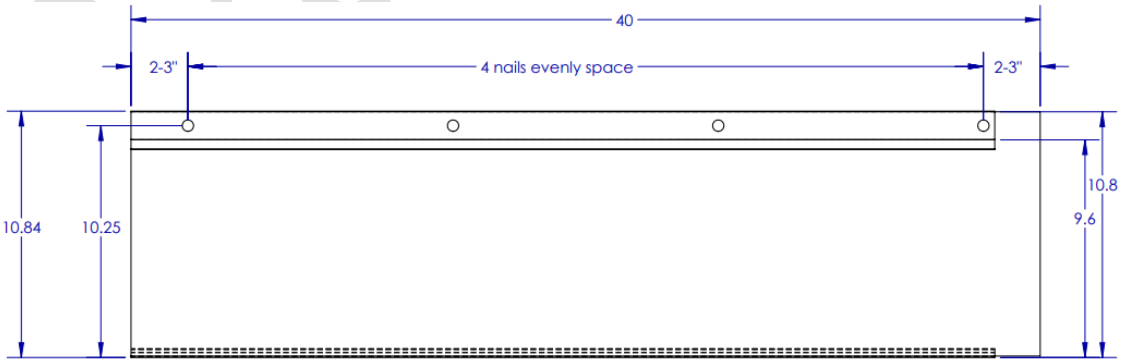

Figure 1: View of TimberSteel™ Metal Roof Shingle (full-shingle)

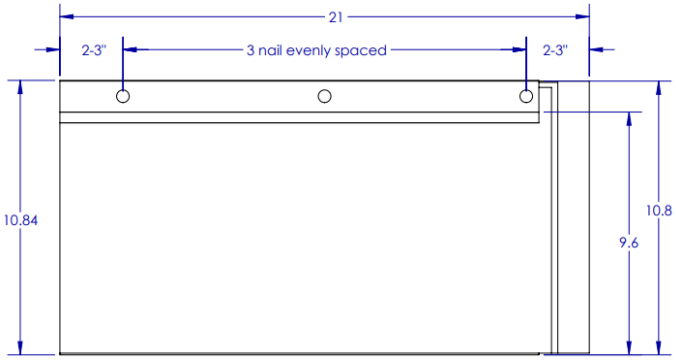

Figure 2: View of TimberSteel™ Metal Roof Shingle (half-shingle)

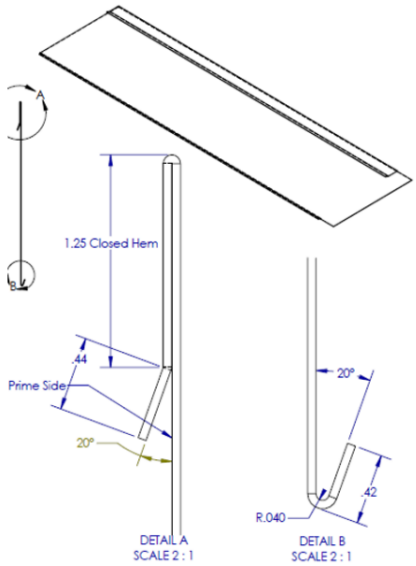

Figure 3A: View of 24 ga. Locking Mechanism

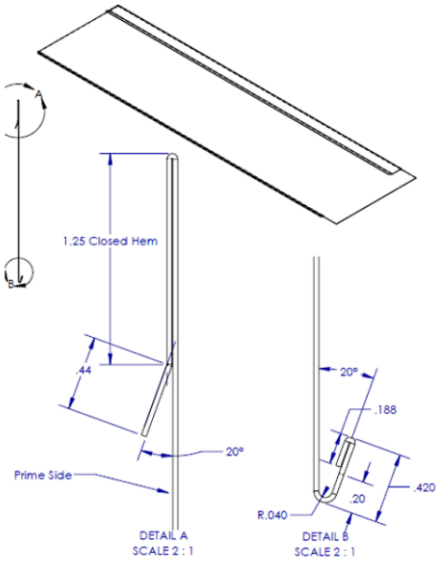

Figure 3B: View of 26 ga. Locking Mechanism

5. LIMITATIONS:

5.1 This is a building code evaluation. Neither NEMO ETC, LLC nor Robert Nieminen, P.E. are, in any way, the Designer of Record for any project on which this PEER, or previous versions thereof, is/was used for permitting or design guidance. PEERs are not to be construed as representing any attributes not specifically listed, nor are PEERs to be construed as an endorsement of the subject, or a recommendation for its use. There is no warranty by NEMO ETC, LLC or Robert Nieminen, P.E., express or implied, as to any finding or other matter in this PEER, or as to any product covered by the PEER.

5.2 This PEER is exclusively for use in High Velocity Hurricane Zone jurisdictions, as defined in FBC Chapter 2 (Broward and Miami-Dade Counties).

5.3 The evaluation herein pertains to above-deck roof components; deck-attachment details pertain to 'as-tested' conditions under **Testing Application Standard TAS 114, Appendix J**. Roof decks shall be in accordance with **FBC HVHZ** requirements to the satisfaction of the Authority Having Jurisdiction.

5.4 This PEER does not include evaluation of fire classification. Refer to **FBC HVHZ 1516** for requirements and limitations regarding roof assembly fire classification. Refer to **FBC 2603** for requirements and limitations concerning the use of foam plastic insulation.

5.5 This PEER does not include evaluation of roof edge termination. Refer to **Roofing Application Standard RAS 111** for requirements and limitations regarding edge securement for low-slope roofs.

5.6 Refer to **FBC HVHZ 1521** for requirements and limitations regarding recover installations.

5.6.1 For mechanically attached components over existing roof decks, fasteners shall be tested in the existing deck for withdrawal resistance. A qualified design professional shall review the data for comparison to the minimum requirements for the system. Testing shall be in accordance with **Testing Application Standard TAS 105**.

5.7 **Wind Classification:**

5.7.1 Pressure-Differential Method:

5.7.1.1 Table 1 outlines attachment requirements for design based on wind pressure resistance, as determined in accordance with **FBC HVHZ 1620** or **FBCR Chapter 3**.

5.7.1.2 "MDP" = Maximum Design Pressure is the result of testing for wind load resistance based on allowable wind loads, and reflects the ultimate passing pressure divided by 2 (the 2 to 1 margin of safety per **Testing Application Standard TAS 125** has already been applied). Refer to **FBC HVHZ 1620** for determination of design wind loads.

5.7.1.3 Unless otherwise noted, underlayment shall be any GAF underlayment holding current Florida Statewide or Local Product Approval, and listed as allowable for use under Metal Roof Panels or Metal Roof Shingles **(FBC HVHZ 1518.9)**. The underlayment shall be installed in accordance with the Florida Statewide or Local Product Approval.

TABLE 1: WIND UPLIFT PERFORMANCE
TIMBERSTEEL™ METAL ROOF SHINGLES

SYSTEM NO.	DECK	UNDERLAYMENT	PANEL	PANEL ATTACHMENT	MDP (PSF)
1.	**New:** Plywood, APA rated sheathing, 40/20, Exposure 1, **PS1**, 19/32 category, 8d ring shank nails 6" o.c. **Reroof:** Plywood, APA rated sheathing, 40/20, Exposure 1, **PS1**, 15/32 category, 8d ring shank nails 6" o.c.	Any roof underlayment, FBC Approved for use with metal roof systems	TimberSteel™ Metal Roof Shingle (full-shingle)	**Eight (8)** 1.25" x 0.120" corrosion resistant, ring-shank roofing nails per shingle; Parts positioned 0.5-inch from the edge of the shingle and continuing 4.75-inch o.c. across the nailing flange. Each course staggered by ½ shingle.	-56.0
2.	**New:** Plywood, APA rated sheathing, 40/20, Exposure 1, **PS1**, 19/32 category, 8d ring shank nails 6" o.c. **Reroof:** Plywood, APA rated sheathing, 40/20, Exposure 1, **PS1**, 15/32 category, 8d ring shank nails 6" o.c.	Any roof underlayment, FBC Approved for use with metal roof systems	TimberSteel™ Metal Roof Shingle (full-shingle)	**Eight (8)** #12 x 1.5-inch corrosion resistant, self-drilling, pan-head screws per shingle; Two (2) parts, positioned 2-inch from each edge, and six (6) parts equally spaced there-between.	-97.3
3.	**New:** Plywood, APA rated sheathing, 40/20, Exposure 1, **PS1**, 19/32 category, 8d ring shank nails 3" o.c. **Reroof:** Plywood, APA rated sheathing, 40/20, Exposure 1, **PS1**, 15/32 category, 8d ring shank nails 3" o.c.	Any roof underlayment, FBC Approved for use with metal roof systems	TimberSteel™ Metal Roof Shingle (full-shingle)	**Eight (8)** #12 x 1.5-inch corrosion resistant, self-drilling, pan-head screws per shingle; Two (2) parts, positioned 2-inch from each edge, and six (6) parts equally spaced there-between.	-116.0

©2026 FBC HVHZ

5.8 Minimum slope shall not be less than 3:12.

5.9 Coil metal used to produce the shingles shall comply with **FBC HVHZ 1518.9**.

5.9 Corrosion Resistance – Saltwater Environments:
Fasteners and connectors, if applicable, in areas within 3,000 feet of a saltwater coastline shall demonstrate compliance with FBC 1711 to the satisfaction of the Authority Having Jurisdiction.

5.11 All components in the roof assembly shall have quality assurance audit in accordance with **F.A.C. Rule 61G20-3**. Refer to the Product Approval of the component manufacturer for components listed in Appendix 1 that are produced by a Product Manufacturer other than the report holder on Page 1 of this PEER.

6. INSTALLATION:

6.1 **TimberSteel™ Metal Roof Shingles** shall be installed in accordance with **GAF** published installation instructions, subject to the Limitations of Use noted herein.

6.1.1 Underlayment shall be FBC HVHZ Approved for use with metal shingles, be acceptable to GAF, and be installed in accordance with the Florida Product Approval of the underlayment manufacturer.

6.1.2 Fasteners and connectors, if applicable, in areas within 3,000 feet of a saltwater coastline shall demonstrate compliance with FBC 1711 to the satisfaction of the Authority Having Jurisdiction.

7. BUILDING PERMIT REQUIREMENTS:

As required by the Building Official or Authority Having Jurisdiction to properly evaluate the installation of this product.

8. MANUFACTURING PLANTS:

Burgaw, NC

9. QUALITY ASSURANCE ENTITY:

UL LLC – QUA9625; (360) 817-5512; bsai.inspections@ul.com

- END OF PEER -

2026 FBC HVHZ