Code Compliance Research Report
CCRR-1037

Issue Date: 08-19-2015
Revision Date: 02-26-2026
Renewal Date: 02-28-2027

DIVISION: 07 00 00 – THERMAL AND MOISTURE PROTECTION
Section: 07 42 13.19 – Insulated Metal Wall Panels

REPORT HOLDER:
Kingspan Insulated Panels, Inc.
720 Marion Road
Columbus, OH 43207
www.kingspanpanels.com

REPORT SUBJECT:
DESIGNWALL 2000, DESIGNWALL 2000R, DESIGNWALL 4000, VALE and Quadcore B VALE Foam Core Insulated Metal Panels

1.0 SCOPE OF EVALUATION

This Research Report addresses compliance with the following Codes:

- 2024, 2021, and 2018 *International Building Code* (IBC)
- 2023 *Florida Building Code* excluding High-Velocity-Hurricane Zones (HVHZ) (See Section 9.1)
- 2025 and 2022 *California Building Code (CBC)* (See Section 9.2)
- 2023 *City of Los Angeles Building Code (LABC)* (See Section 9.3)

Note: This report references the most recent Code edition noted. Section numbers in earlier editions may differ.

The DESIGNWALL 2000, DESIGNWALL 2000R, DESIGNWALL 4000, VALE, and Quadcore B VALE Foam Core Panels have been evaluated for the following properties:

- Structural
- Fire Resistance
- Water Penetration

2.0 USES

The DESIGNWALL 2000, DESIGNWALL 2000R, DESIGNWALL 4000, VALE, and Quadcore B VALE Panels are intended for use as exterior non-load bearing walls or as cladding on exterior walls. The panels are used in locations where combustible, non-fire-resistance-rated building construction is permitted by the IBC and on buildings of Type I, II, III, or IV construction as further described in Section 5.5.

DESIGNWALL 2000, DESIGNWALL 2000R, DESIGNWALL 4000, VALE, and Quadcore B VALE Foam Core Insulated Metal Panels comply with the Codes listed in Section 1.1, for the properties stated in section 1.0.

2.1 2024 IBC and IRC Evaluation Reports

The Intertek CCRR is an *Evaluation Report* for approval of an alternate material, design, or method of construction in accordance with Section 104.2.3.6.1 of the 2024 IBC and Section R104.2.2.6.1 of the 2024 IRC.

3.0 DESCRIPTION

3.1 General:

The DESIGNWALL 2000 and DESIGNWALL 4000 Panels are sandwich panels with metal facings and foam plastic insulation cores. The panels are 12, 18, 24, 30, 36, or 42 inches wide, and are available in thicknesses of 2, 2.5, 3, and 4 inches. Panels are formed with straight ends and double tongue and groove interlocking edges along the length of the panels. See Figures 1 and 2.

DESIGNWALL 2000R panels are ribbed profile (exterior), steel faced, foam plastic insulated sandwich panels. The panels are produced in thicknesses of 2.5, 3 and 4 inches and widths of 12, 16, 20 and 24 inches. See Figure 14.

VALE and Quadcore B VALE panels are ribbed profile (exterior), steel faced, foam insulated sandwich panels. The panels are produced in thicknesses of 3 and 4 inches. The standard panel width is 36 inches. See Figure 11.

3.2 Panel Core:

The DESIGNWALL 2000 and DESIGNWALL 2000R panel consists of a polyisocyanurate core or Kingspan's proprietary Quadcore B core laminated to the metal facings using a structural panel laminating adhesive.

The DESIGNWALL 4000 panel consists of a continuously poured-in-place polyisocyanurate core or Kingspan's proprietary Quadcore.

VALE panels consist of polyisocyanurate (PIR) core discontinuously foamed-in-place between the metal skins.

Quadcore B VALE panels consist of Kingspan's proprietary Quadcore B core laminated to the metal facings using a structural panel laminating adhesive.

3.3 Panel Facings:

Panels are manufactured with steel or aluminum facings.

3.3.1 Steel panel facings are minimum 24-gauge steel on the interior face and minimum 22-gauge steel on the exterior face, conforming to ASTM A653 SS G90 galvanize coating with minimum Grade 33 ksi steel, or ASTM A792 SS AZ50 (or greater) coating with minimum Grade 33 ksi steel or ASTM A1046 SS ZM90 coating with minimum Grade 33 ksi steel.

3.3.2 Aluminum panel facings are 0.040-inch ASTM B209 3003 H14 on both faces.

3.3.3 The panel facings can be finished with a variety of colored coatings.

3.3.4 DESIGNWALL 2000 and 4000 panel facings are available in flat, striated or shadowline or micro-rib. In addition, DW2000 panels with steel facings (Alum – N.A.) are available with a deep joint configuration (See Figures 6 through 10). VALE, Quadcore B VALE, and DESIGNWALL 2000R exterior panel facings are available in a ribbed profile (See Figures 11, 12, and 14).

4.0 PERFORMANCE CHARACTERISTICS

4.1 Allowable Load Capacity:

Allowable positive and negative transverse wind loads based on panel stiffness, strength, and fastener capacity are set forth in Tables 3 through 25.

4.2 The panels, when installed in accordance with this report, provide a weather-resistive exterior wall envelope, as evidenced by testing in accordance with ASTM E331 per the requirements of IBC Section 1402.2 [FBC Section1403.2.]

4.3 The foam plastic core has a flame spread index and a smoke developed index not exceeding 25 and 450, respectively, when tested in accordance with ASTM E84.

4.4 All panel finishes have a thickness less than 0.036 in. (0.9 mm) and are therefore exempt from testing, in accordance with IBC Section 803.2.

Wall assemblies constructed in accordance with Intertek Design Number KIP/IMWP 30-01 for Designwall 2000, KIP/IMWP 30-02 for Designwall 4000, KIP/IMWP 30-09 for VALE, KIP/IMWP 30-15 and KIP/IMWP 30-16 for Quadcore B Vale, and KIP/IMWP 30-08 and KIP/IMWP 30-14 for Designwall 2000R (see Section 5.5) with steel-faced DESIGNWALL 2000, DESIGNWALL 4000, VALE, Quadcore B VALE, and DESIGNWALL 2000R Foam Core Panels, respectively, comply with IBC Section 2603.5 for walls of any height in Type I, II, III, or IV construction permitted to be of non-fire-resistance-rated construction.

5.0 INSTALLATION

5.1 General Installation:

Panels may be installed in either a vertical or horizontal orientation. The panels are fastened to steel framing support members with clips and fasteners as described in Section 5.2. Structural support members shall provide a minimum panel bearing width of 1-5/8 inches.

5.2 Fasteners:

DESIGNWALL 2000, 2000R and 4000 panels are attached to the steel supports with 14-gauge stainless steel panel clips (See Figure 3 and 4) fastened with minimum two 1/4-14 HWH zinc coated self-tapping screws.

VALE and Quadcore B VALE panels are attached to the supports with 12-gauge panel stainless steel panel clips (Figure 13) with minimum two 1/4-14 HWH zinc coated self-tapping screws.

5.3 Dual Tongue and Groove Joint Sealant:

DESIGNWALL 2000 and 2000R panel joints are sealed with extruded rubber gaskets. Gaskets are applied to side joints of adjacent panels before panel engagement. The panels are interlocked to make continuous seal contact. Installation proceeds along the wall elevation with successive panels being in accordance with the manufacturer's installation instructions.

DESIGNWALL 4000 panel joints are sealed with an extruded rubber gasket on the exterior tongue and groove interlock, and a 1/4-inch bead of non-skinning butyl sealant on the interior tongue and groove interlock.

VALE and Quadcore B VALE panel joints are sealed with an extruded rubber gasket on the interior tongue and groove interlock, and an optional 1/4-inch bead of non-skinning butyl sealant on the exterior tongue and groove interlock.

5.4 Flashing: Flashing must be installed in accordance with Section 1404.4 of the IBC including, but not limited to, panel ends, eaves, openings, and corners. The

flashing and trim are attached to the panels with 1/4-14 HWH or No. 10 by 3/4-inch Philips pan-head, self-tapping, self-drilling screws. Pop rivets may also be used in accordance with the manufacturer's installation instructions.

5.4 Use on Exterior Walls of Type I, II, III, or IV Construction:

Steel-faced panels may be used on non-fire-resistance-rated exterior walls of buildings of Type I, II, III, or IV construction of any height, when the construction conforms with Intertek Design Number KIP/IMWP 30-01 for Designwall 2000, KIP/IMWP 30-02 for Designwall 4000, KIP/IMWP 30-09 for VALE, KIP/IMWP 30-15 and KIP/IMWP 30-16 for Quadcore B Vale, and KIP/IMWP 30-08 and KIP/IMWP 30-14 for Designwall 2000R.

Vertical butt joints must be sealed with VJ-4F extruded flame retardant gasket (supplied by Kingspan) inserted between panels; the panels have "trimless ends", which fold the exterior face steel over the panel end for 7/8 inches (see Figure 5). Panel ends are attached in typical fashion, using two 1/4-14 HWH zinc coated self-tapping screws with 14-gauge stainless steel clips at the top side of each horizontally installed panel, while the bottom side is engaged to the preceding panel. The vertical gap between "trimless" ends of consecutive panels is nominally 1/2 inch wide.

6.0 CONDITIONS OF USE

The DESIGNWALL 2000, DESIGNWALL 2000R, DESIGNWALL 4000, VALE, and Quadcore B VALE Panels described in this Research Report comply with the Codes listed in Section 1.0 of this report, subject to the following conditions:

6.1 Installation must comply with this Research Report, the manufacturer's published installation instructions, and the applicable Code. In the event of a conflict between the manufacturer's instructions and this report, this report governs.

6.2 Wall panel installation shall be limited to non-load bearing walls or as cladding on exterior walls.

6.3 DESIGNWALL 2000, DESIGNWALL 2000R, DESIGNWALL 4000, VALE, and Quadcore B VALE Panels may be installed without the thermal barrier required by IBC Section 2603.4.

6.4 DESIGNWALL 2000, DESIGNWALL 2000R, DESIGNWALL 4000, VALE, and Quadcore B VALE Panels may be installed on buildings of Types I, II, III, and IV construction, permitted to be on non-fire-resistance-rated construction, as follows:

6.4.1 One-Story Buildings: Panels up to 4 inches thick in buildings equipped throughout with automatic sprinkler system in accordance with IBC Section 903.3.1.1.

6.4.2 Buildings of Any Height: Wall assemblies described in Intertek Design Number KIP/IMWP 30-01, KIP/IMWP 30-02, KIP/IMWP 30-08, KIP/IMWP 30-09, KIP/IMWP 30-14, KIP/IMWP 30-15, and KIP/IMWP 30-16.

6.5 Details on wall framing must be approved by the Code Official prior to installation.

6.6 Design wind pressure derived from nominal design wind speeds (V_{asd}) in accordance with IBC Section 1609.3.1 shall not exceed the allowable wind load pressure given in Tables 3 through 20.

6.7 All construction plans and calculations for load conditions must be submitted to the Code Official for approval.

6.8 DESIGNWALL 2000, DESIGNWALL 2000R, DESIGNWALL 4000, VALE, and Quadcore B VALE Insulated Metal Panels are manufactured under an approved quality system with inspections by Intertek Testing Services NA, Inc. at the following locations:

Kingspan Manufacturing Plants

Location	Products
Caledon, ON	Designwall 4000, All pour-in-place cores.
Modesto, CA	Designwall 4000, All pour-in-place cores. Designwall 2000, Laminated PIR core or Quadcore B core.
Columbus, OH	Designwall 2000, Designwall 2000R, Laminated PIR core or Quadcore B core VALE, Foam-in-place PIR core Quadcore B VALE laminated Quadcore B core

7.0 SUPPORTING EVIDENCE

7.1 Data in accordance with ICC-ES Acceptance Criteria for Sandwich Panels AC04, dated June 2019 (editorially revised Dec. 2020) Acceptance Criteria for Sandwich Panel Adhesives AC05, dated June 2009 (editorially revised May 2018); and Acceptance Criteria for Foam Plastic Insulation AC12, dated June 2012 (editorially revised May 2016).

7.2 Test reports demonstrating compliance with ASTM E84-2021a and NFPA 285-23.

7.3 Test reports for water penetration resistance demonstrating compliance with ASTM E331-2000(2016).

8.0 IDENTIFICATION

The DESIGNWALL 2000, DESIGNWALL 2000R, DESIGNWALL 4000, VALE, and Quadcore B VALE Panels are identified by a marking bearing the Report holder's name, the product name, flame spread, and smoke developed indices, the Intertek Mark, and the Code Compliance Research Report number (CCRR-1037).

9.0 OTHER CODES

9.1 FLORIDA BUILDING CODE

9.1.1 Scope of Evaluation:

The DESIGNWALL 2000, DESIGNWALL 2000R, DESIGNWALL 4000, VALE, and Quadcore B VALE Foam Core Insulated Metal Panels were evaluated for compliance with the 2023 Florida Building Code – Building, Florida Building Code

9.1.2 Conclusion:

The DESIGNWALL 2000, DESIGNWALL 2000R, DESIGNWALL 4000, VALE, and Quadcore B VALE Foam Core Insulated Metal Panels described in Sections 2.0 through 7.0 of this Research Report, comply with the *2023 Florida Building Code – Buildings*, subject to the following conditions:

- Use of the DESIGNWALL 2000, DESIGNWALL 2000R, DESIGNWALL 4000, VALE, and Quadcore B VALE Foam Core Insulated Metal Panels for compliance with the High-Velocity Hurricane Zone provisions of the 2023 *Florida Building Code – Building* and the *Florida Building Code – Residential* has not been evaluated, and is outside the scope of this Research Report.

- Intertek is an approved evaluation entity and quality assurance entity pursuant to Florida Statute 553.842 – *Product Evaluation and Approval*.

9.2 CALIFORNIA BUILDING CODE

9.2.1 Scope of Evaluation: The DESIGNWALL 2000, DESIGNWALL 2000R, DESIGNWALL 4000, VALE, and Quadcore B VALE Foam Core Insulated Metal Panels were evaluated for compliance with the 2025 and 2022 *California Building Code.*

9.2.2 Conclusion:

The DESIGNWALL 2000, DESIGNWALL 2000R, DESIGNWALL 4000, VALE, and Quadcore B VALE Foam Core Insulated Metal Panels, described in Sections 2.0 through 7.0 of this Research Report, comply with the 2025 and 2022 *California Building Code.*

9.2 CITY OF LOS ANGELES BUILDING CODE

9.3.1 Scope of Evaluation:

The DESIGNWALL 2000, DESIGNWALL 2000R, DESIGNWALL 4000, VALE, and Quadcore B VALE Foam Core Insulated Metal Panels were evaluated for compliance with the 2023 *City of Los Angeles Building Code.*

9.3.2 Conclusion:

The DESIGNWALL 2000, DESIGNWALL, 2000R, DESIGNWALL 4000, VALE, and Quadcore B VALE Foam Core Insulated Metal Panels, described in Sections 2.0 through 7.0 of this Research Report, comply with the 2023 *City of Los Angeles Building Code.*

10.0 CODE COMPLIANCE RESEARCH REPORT USE

10.1 Approval of building products and/or materials can only be granted by a building official having legal authority in the specific jurisdiction where approval is sought.

10.2 Code Compliance Research Reports shall not be used in any manner that implies an endorsement of the product by Intertek.

10.3 Reference to the Intertek website address: https://bpdirectory.intertek.com is recommended to ascertain the current version and status of this report.

This Code Compliance Research Report ("Report") is for the exclusive use of Intertek's Client and is provided pursuant to the agreement between Intertek and its Client. Intertek's responsibility and liability are limited to the terms and conditions of the agreement. Intertek assumes no liability to any party, other than to the Client in accordance with the agreement, for any loss, expense or damage occasioned by the use of this Report. Only the Client is authorized to permit copying or distribution of this Report and then only in its entirety, and the Client shall not use the Report in a misleading manner. Client further agrees and understands that reliance upon the Report is limited to the representations made therein. The Report is not an endorsement or recommendation for use of the subject and/or product described herein. This Report is not the Intertek Listing Report covering the subject product and utilized for Intertek Certification and this Report does not represent authorization for the use of any Intertek certification marks. Any use of the Intertek name or one of its marks for the sale or advertisement of the tested material, product or service must first be approved in writing by Intertek.

TABLE 1 – PROPERTIES EVALUATED

PROPERTY	2024 IBC SECTION	2021 and 2018 IBC SECTION	2023 FBC SECTION	2025 and 2022 CBC SECTION	2023 LABC SECTION
Interior Wall and Ceiling Classifications for Fire Performance and Smoke Development	803.1	803.1	803.1	803.1	803.1
Fire Protection NFPA 13 Sprinkler Systems	903.3.1.1	903.3.1.1	903.3.1.1	903.3.1.1	903.3.1.1
Exterior Wall Weather Protection	1402.2	1402.2	1403.2	1402.2	1402.2
Flashing	1404.4	1404.4	1404.4	1404.4	1404.4
Wind Loads Wind Speed Conversion	1609.3.1	1609.3.1	1609.3.1	1609.3.1	1609.3.1
Plastics Thermal Barrier	2603.4	2603.4	2603.4	2603.4	2603.4
Exterior Walls of Buildings of Type I, II, III or IV construction	2603.5	2603.5	2603.5	2603.5	2603.5
Insulated Metal Panel (IMP)	1409	-	-	1409 (2025)	-

TABLE 2 – PRODUCTS EVALUATED

Panel Designation	Profile	
	Exterior	Interior
DESIGNWALL 2000 and DESIGNWALL 4000	Flat, Striated, Shadowline, or Micro-Rib with non-directional embossed or smooth surface texture. (DW2000 panels with steel facings are available with Deep Joint Configuration)	Flat, Shadowline or Micro-Rib with non-directional embossed or smooth surface texture
VALE, Quadcore B VALE, and DESIGNWALL 2000R	Ribbed profile with non-directional embossed or smooth surface texture.	Flat with non-directional embossed or smooth surface texture

TABLE 3 – TABLE 25: ALLOWABLE WIND LOADS (PSF)

1. Allowable loads are applicable to wind design pressure derived from nominal wind speed (V_{asd}) per IBC Section 1609.3.1.
2. Allowable loads are based on the lesser of deflection, and panel strength, with consideration of the effects of fastener location and fastener-to-panel connection on the allowable negative loads. Limiting factor for each allowable load is identified by the following notations:
   (N) Negative Load/Connection Design Strength (2.0 SF applied to max. test load)
   (S) Core Shear Design Strength (3.0 SF applied to shear strength per ASTM C273)
   (B) Flexural Bending Design Strength (Allowable compressive stress per ADM and AISI S100 for aluminum and steel facing respectively)
   (D) Deflection at L/180 (Core Shear Modulus, G = 276 psi)
3. Design strength for panel connection addresses panel clip-to-panel connection only. Allowable load may be lower based upon the design value of fasteners in supporting structural framing and shall be checked by a qualified engineer.
4. Allowable loads for double span and triple span apply to continuous panels installed over three supports and four supports respectively. Supports are equally spaced.
5. For allowable wind loads for Deep Joint 3” panel use 2” panel thickness row. For allowable wind loads for Deep Joint 4” panel use 3” panel thickness row. Deep joint panels available in DW2000 configuration only.
6. Standard DW2000 Reveals can be 1/16” up to 6".
7. DW2000 Panels with Deep Joint are 3” and 4” thick panels and can have reveals of 1/8” up to 6.”
8. Standard DW4000 Reveals can be 1/8” up to 3”.

DW2000 and DW4000 STEEL SKIN PANELS WITH 1/2" REVEAL

TABLE 3 - Allowable Positive and Negative Transverse Loads 12-Inch-Wide Panel - 22 Gauge Exterior/24 Gauge Interior Steel Skin – 1/2" Reveal												
Panel Thickness (Inches)	**Span Between Supports (Feet) / Single Span**											
	4		**6**		**8**		**10**		**12**		**14**	
2	66	D	40	D	27	D	19	D	13	D	-	-
2.5	84	S	52	D	35	D	25	D	19	D	14	D
3	90	S	60	S	44	D	32	D	24	D	18	D
4	102	S	68	S	51	S	41	S	34	S	27	D
Panel Thickness (Inches)	**Span Between Supports (Feet) / Double Span**											
	4		**6**		**8**		**10**		**12**		**14**	
2	67	D	42	D	29	D	22	D	17	D	13	D
2.5	80	S	52	S	38	S	28	D	22	D	17	D
3	87	S	56	S	41	S	32	S	26	S	22	S
4	99	S	64	S	47	S	37	S	30	S	25	S
Panel Thickness (Inches)	**Span Between Supports (Feet) / Triple Span**											
	4		**6**		**8**		**10**		**12**		**14**	
2	67	D	42	D	29	D	22	D	16	D	13	D
2.5	78	S	50	S	37	S	28	D	22	D	17	D
3	85	S	54	S	40	S	31	S	26	S	22	D
4	97	S	63	S	46	S	36	S	30	S	25	S

TABLE 4 - Allowable Positive and Negative Transverse Loads 18-Inch-Wide Panel - 22 Gauge Exterior/24 Gauge Interior Steel Skin – 1/2" Reveal												
Panel Thickness (Inches)	**Span Between Supports (Feet) / Single Span**											
	4		**6**		**8**		**10**		**12**		**14**	
2	66	D	40	D	27	D	19	D	13	D	-	-
2.5	84	S	52	D	35	D	25	D	19	D	14	D
3	90	S	60	S	44	D	32	D	24	D	18	D
4	102	S	68	S	51	S	41	S	34	S	27	D
Panel Thickness (Inches)	**Span Between Supports (Feet) / Double Span**											
	4		**6**		**8**		**10**		**12**		**14**	
2	67	D	42	D	29	D	22	D	17	D	13	D
2.5	80	S	52	S	38	S	28	D	22	D	17	D
3	87	S	56	S	41	S	32	S	26	S	22	S
4	99	S	64	S	47	S	37	S	30	S	25	S
Panel Thickness (Inches)	**Span Between Supports (Feet) / Triple Span**											
	4		**6**		**8**		**10**		**12**		**14**	
2	67	D	42	D	29	D	22	D	16	D	13	D
2.5	78	S	50	S	37	S	28	D	22	D	17	D
3	85	S	54	S	40	S	31	S	26	S	22	D
4	97	S	63	S	46	S	36	S	30	S	25	S

DW2000 and DW4000 STEEL SKIN PANELS WITH 1/2" REVEAL (CONTINUED)

TABLE 5 - Allowable Positive and Negative Transverse Loads 24-Inch-Wide Panel - 22 Gauge Exterior/24 Gauge Interior Steel Skin – 1/2" Reveal												
Panel Thickness (Inches)[5]	**Span Between Supports (Feet) / Single Span**											
	4		**6**		**8**		**10**		**12**		**14**	
2	66	D	40	D	27	D	19	D	13	D	-	-
2.5	84	S	52	D	35	D	25	D	19	D	14	D
3	90	S	60	S	44	D	32	D	24	D	18	D
4	102	S	68	S	51	S	41	S	34	S	27	D
Panel Thickness (Inches)[5]	**Span Between Supports (Feet) / Double Span**											
	4		**6**		**8**		**10**		**12**		**14**	
2	67	D	42	D	29	D	22	D	17	D	13	D
2.5	80	S	52	S	38	S	28	D	22	D	17	D
3	87	S	56	S	41	S	32	S	26	S	22	S
4	98	N	64	S	47	S	37	S	30	S	25	S
Panel Thickness (Inches)[5]	**Span Between Supports (Feet) / Triple Span**											
	4		**6**		**8**		**10**		**12**		**14**	
2	67	D	42	D	29	D	22	D	16	D	13	D
2.5	78	S	50	S	37	S	28	D	22	D	17	D
3	85	S	54	S	40	S	31	S	26	S	22	D
4	97	S	63	S	46	S	36	S	30	S	25	S

TABLE 6 - Allowable Positive and Negative Transverse Loads 30-Inch-Wide Panel - 22 Gauge Exterior/24 Gauge Interior Steel Skin – 1/2" Reveal												
Panel Thickness (Inches)[5]	**Span Between Supports (Feet) / Single Span**											
	4		**6**		**8**		**10**		**12**		**14**	
2	66	D	40	D	27	D	19	D	13	D	-	-
2.5	84	S	52	D	35	D	25	D	19	D	14	D
3	89	N	59	N	44	D	32	D	24	D	18	D
4	89	N	59	N	44	N	36	N	30	N	25	N
Panel Thickness (Inches)[5]	**Span Between Supports (Feet) / Double Span**											
	4		**6**		**8**		**10**		**12**		**14**	
2	67	D	42	D	29	D	22	D	17	D	13	D
2.5	78	N	52	S	38	S	28	D	22	D	17	D
3	78	N	52	N	39	N	31	N	26	S	22	S
4	78	N	52	N	39	N	31	N	26	N	22	N
Panel Thickness (Inches)[5]	**Span Between Supports (Feet) / Triple Span**											
	4		**6**		**8**		**10**		**12**		**14**	
2	67	D	42	D	29	D	22	D	16	D	13	D
2.5	78	S	50	S	37	S	28	D	22	D	17	D
3	85	S	54	S	40	S	31	S	26	S	22	D
4	89	N	59	N	45	N	36	N	30	S	25	S

DW2000 AND DW4000 STEEL SKIN PANELS WITH 1/2" REVEAL (CONTINUED)

TABLE 7 - Allowable Positive and Negative Transverse Loads 36-Inch-Wide Panel - 22 Gauge Exterior/24 Gauge Interior Steel Skin – 1/2" Reveal												
Panel Thickness (Inches)[5]	**Span Between Supports (Feet) / Single Span**											
	4		**6**		**8**		**10**		**12**		**14**	
2	66	D	40	D	27	D	19	D	13	D	-	-
2.5	74	N	49	N	35	D	25	D	19	D	14	D
3	74	N	49	N	37	N	30	N	24	D	18	D
4	74	N	49	N	37	N	30	N	25	N	21	N
Panel Thickness (Inches)[5]	**Span Between Supports (Feet) / Double Span**											
	4		**6**		**8**		**10**		**12**		**14**	
2	65	N	42	D	29	D	22	D	17	D	13	D
2.5	65	N	44	N	33	N	26	N	22	N	17	D
3	65	N	44	N	33	N	26	N	22	N	19	N
4	65	N	44	N	33	N	26	N	22	N	19	N
Panel Thickness (Inches)[5]	**Span Between Supports (Feet) / Triple Span**											
	4		**6**		**8**		**10**		**12**		**14**	
2	67	D	42	D	29	D	22	D	16	D	13	D
2.5	74	N	49	N	37	S	28	D	22	D	17	D
3	74	N	49	N	37	N	30	N	25	N	21	N
4	74	N	49	N	37	N	30	N	25	N	21	N

TABLE 8 - Allowable Positive and Negative Transverse Loads 42-Inch-Wide Panel - 22 Gauge Exterior/24 Gauge Interior Steel Skin – 1/2" Reveal												
Panel Thickness (Inches)	**Span Between Supports (Feet) / Single Span**											
	4		**6**		**8**		**10**		**12**		**14**	
2	63	N	40	D	27	D	19	D	13	D	-	-
2.5	63	N	42	N	32	N	25	D	19	D	14	D
3	63	N	42	N	32	N	25	N	21	N	18	N
4	63	N	42	N	32	N	25	N	21	N	18	N
Panel Thickness (Inches)	**Span Between Supports (Feet) / Double Span**											
	4		**6**		**8**		**10**		**12**		**14**	
2	56	N	37	N	28	N	22	D	17	D	13	D
2.5	56	N	37	N	28	N	22	N	19	N	16	N
3	56	N	37	N	28	N	22	N	19	N	16	N
4	56	N	37	N	28	N	22	N	19	N	16	N
Panel Thickness (Inches)	**Span Between Supports (Feet) / Triple Span**											
	4		**6**		**8**		**10**		**12**		**14**	
2	64	N	42	D	29	D	22	D	16	D	13	D
2.5	64	N	42	N	32	N	25	N	21	N	17	D
3	64	N	42	N	32	N	25	N	21	N	18	N
4	64	N	42	N	32	N	25	N	21	N	18	N

DW2000 AND DW4000 STEEL SKIN PANELS WITH 6" REVEAL

TABLE 9 - Allowable Positive and Negative Transverse Loads 12-Inch-Wide Panel - 22 Gauge Exterior/24 Gauge Interior Steel Skin – 6" Reveal												
Panel Thickness (Inches)	**Span Between Supports (Feet) / Single Span**											
	4		**6**		**8**		**10**		**12**		**14**	
2	66	D	40	D	27	D	19	D	13	D	-	-
2.5	84	S	52	D	35	D	25	D	19	D	14	D
3	90	S	60	S	44	D	32	D	24	D	18	D
4	102	S	68	S	51	S	41	S	34	S	27	D
Panel Thickness (Inches)	**Span Between Supports (Feet) / Double Span**											
	4		**6**		**8**		**10**		**12**		**14**	
2	67	D	42	D	29	D	22	D	17	D	13	D
2.5	80	S	52	S	38	S	28	D	22	D	17	D
3	87	S	56	S	41	S	32	S	26	S	22	S
4	99	S	64	S	47	S	37	S	30	S	25	S
Panel Thickness (Inches)	**Span Between Supports (Feet) / Triple Span**											
	4		**6**		**8**		**10**		**12**		**14**	
2	67	D	42	D	29	D	22	D	16	D	13	D
2.5	78	S	50	S	37	S	28	D	22	D	17	D
3	85	S	54	S	40	S	31	S	26	S	22	D
4	97	S	63	S	46	S	36	S	30	S	25	S

TABLE 10 - Allowable Positive and Negative Transverse Loads 18-Inch-Wide Panel - 22 Gauge Exterior/24 Gauge Interior Steel Skin – 6" Reveal												
Panel Thickness (Inches)	**Span Between Supports (Feet) / Single Span**											
	4		**6**		**8**		**10**		**12**		**14**	
2	66	D	40	D	27	D	19	D	13	D	-	-
2.5	84	S	52	D	35	D	25	D	19	D	14	D
3	90	S	60	S	44	D	32	D	24	D	18	D
4	102	S	68	S	51	S	41	S	34	S	27	D
Panel Thickness (Inches)	**Span Between Supports (Feet) / Double Span**											
	4		**6**		**8**		**10**		**12**		**14**	
2	67	D	42	D	29	D	22	D	17	D	13	D
2.5	80	S	52	S	38	S	28	D	22	D	17	D
3	87	S	56	S	41	S	32	S	26	S	22	S
4	99	S	64	S	47	S	37	S	30	S	25	S
Panel Thickness (Inches)	**Span Between Supports (Feet) / Triple Span**											
	4		**6**		**8**		**10**		**12**		**14**	
2	67	D	42	D	29	D	22	D	16	D	13	D
2.5	78	S	50	S	37	S	28	D	22	D	17	D
3	85	S	54	S	40	S	31	S	26	S	22	D
4	97	S	63	S	46	S	36	S	30	S	25	S

DW2000 AND DW4000 STEEL SKIN PANELS WITH 6" REVEAL (CONTINUED)

TABLE 11 - Allowable Positive and Negative Transverse Loads 24-Inch-Wide Panel - 22 Gauge Exterior/24 Gauge Interior Steel Skin – 6" Reveal												
Panel Thickness (Inches)[5]	**Span Between Supports (Feet) / Single Span**											
	4		**6**		**8**		**10**		**12**		**14**	
2	66	D	40	D	27	D	19	D	13	D	-	-
2.5	77	N	51	N	35	D	25	D	19	D	14	D
3	77	N	51	N	38	N	31	N	24	D	18	D
4	77	N	51	N	38	N	31	N	26	N	22	N
Panel Thickness (Inches)[5]	**Span Between Supports (Feet) / Double Span**											
	4		**6**		**8**		**10**		**12**		**14**	
2	67	D	42	D	29	D	22	D	17	D	13	D
2.5	75	N	50	N	38	S	28	D	22	D	17	D
3	75	N	50	N	38	N	30	N	25	N	22	N
4	75	N	50	N	38	N	30	N	25	N	22	N
Panel Thickness (Inches)[5]	**Span Between Supports (Feet) / Triple Span**											
	4		**6**		**8**		**10**		**12**		**14**	
2	67	D	42	D	29	D	22	D	16	D	13	D
2.5	78	S	50	S	37	S	28	D	22	D	17	D
3	85	S	54	S	40	S	31	S	26	S	22	D
4	86	N	57	N	43	N	34	N	29	N	24	N

TABLE 12 - Allowable Positive and Negative Transverse Loads 30-Inch-Wide Panel - 22 Gauge Exterior/24 Gauge Interior Steel Skin – 6" Reveal												
Panel Thickness (Inches)[5]	**Span Between Supports (Feet) / Single Span**											
	4		**6**		**8**		**10**		**12**		**14**	
2	61	N	40	N	27	D	19	D	13	D	-	-
2.5	61	N	41	N	31	N	24	N	19	D	14	D
3	61	N	41	N	31	N	24	N	20	N	17	N
4	61	N	41	N	31	N	24	N	20	N	17	N
Panel Thickness (Inches)[5]	**Span Between Supports (Feet) / Double Span**											
	4		**6**		**8**		**10**		**12**		**14**	
2	60	N	40	N	29	D	22	D	17	D	13	D
2.5	60	N	40	N	30	N	24	N	20	N	17	N
3	60	N	40	N	30	N	24	N	20	N	17	N
4	60	N	40	N	30	N	24	N	20	N	17	N
Panel Thickness (Inches)[5]	**Span Between Supports (Feet) / Triple Span**											
	4		**6**		**8**		**10**		**12**		**14**	
2	67	D	42	D	29	D	22	D	16	D	13	D
2.5	68	N	46	N	34	N	27	N	22	D	17	D
3	68	N	46	N	34	N	27	N	23	N	20	N
4	68	N	46	N	34	N	27	N	23	N	20	N

DW2000 AND DW4000 STEEL SKIN PANELS WITH 6" REVEAL (CONTINUED)

TABLE 13 - Allowable Positive and Negative Transverse Loads 36-Inch-Wide Panel - 22 Gauge Exterior/24 Gauge Interior Steel Skin – 6" Reveal												
Panel Thickness (Inches)[5]	**Span Between Supports (Feet) / Single Span**											
	4		**6**		**8**		**10**		**12**		**14**	
2	51	N	34	N	26	N	19	D	13	D	-	-
2.5	51	N	34	N	26	N	20	N	17	N	14	D
3	51	N	34	N	26	N	20	N	17	N	15	N
4	51	N	34	N	26	N	20	N	17	N	15	N
Panel Thickness (Inches)[5]	**Span Between Supports (Feet) / Double Span**											
	4		**6**		**8**		**10**		**12**		**14**	
2	50	N	33	N	25	N	20	N	17	D	13	D
2.5	50	N	33	N	25	N	20	N	17	N	14	N
3	50	N	33	N	25	N	20	N	17	N	14	N
4	50	N	33	N	25	N	20	N	17	N	14	N
Panel Thickness (Inches)[5]	**Span Between Supports (Feet) / Triple Span**											
	4		**6**		**8**		**10**		**12**		**14**	
2	57	N	38	N	29	N	22	D	16	D	13	D
2.5	57	N	38	N	29	N	23	N	19	N	16	N
3	57	N	38	N	29	N	23	N	19	N	16	N
4	57	N	38	N	29	N	23	N	19	N	16	N

TABLE 14 - Allowable Positive and Negative Transverse Loads 42-Inch-Wide Panel - 22 Gauge Exterior/24 Gauge Interior Steel Skin – 6" Reveal												
Panel Thickness (Inches)	**Span Between Supports (Feet) / Single Span**											
	4		**6**		**8**		**10**		**12**		**14**	
2	44	N	29	N	22	N	17	N	13	D	-	-
2.5	44	N	29	N	22	N	17	N	15	N	12	N
3	44	N	29	N	22	N	17	N	15	N	12	N
4	44	N	29	N	22	N	17	N	15	N	12	N
Panel Thickness (Inches)	**Span Between Supports (Feet) / Double Span**											
	4		**6**		**8**		**10**		**12**		**14**	
2	43	N	29	N	22	N	17	N	14	N	12	N
2.5	43	N	29	N	22	N	17	N	14	N	12	N
3	43	N	29	N	22	N	17	N	14	N	12	N
4	43	N	29	N	22	N	17	N	14	N	12	N
Panel Thickness (Inches)	**Span Between Supports (Feet) / Triple Span**											
	4		**6**		**8**		**10**		**12**		**14**	
2	49	N	33	N	24	N	20	N	16	N	13	D
2.5	49	N	33	N	24	N	20	N	16	N	14	N
3	49	N	33	N	24	N	20	N	16	N	14	N
4	49	N	33	N	24	N	20	N	16	N	14	N

DW2000 AND DW4000 ALUMINUM SKIN PANELS WITH 1/2" REVEAL

TABLE 15 - Allowable Positive and Negative Transverse Wind Loads 12-Inch-Wide Panel - 0.040 Inch Aluminum Skin – 1/2" Reveal												
Panel Thickness (Inches)	**Span Between Supports (Feet) / Single Span**											
	4		**6**		**8**		**10**		**12**		**14**	
2	60	S	34	D	21	D	14	D	-	-	-	-
2.5	76	S	46	D	29	D	20	D	14	D	-	-
3	91	S	57	D	37	D	26	D	18	D	13	D
4	122	S	81	S	54	D	38	D	28	D	20	B
Panel Thickness (Inches)	**Span Between Supports (Feet) / Double Span**											
	4		**6**		**8**		**10**		**12**		**14**	
2	55	S	35	S	25	D	18	D	13	D	10	D
2.5	70	S	45	S	33	S	24	D	18	D	14	D
3	85	S	55	S	40	S	31	D	23	D	18	D
4	116	S	74	S	54	S	42	S	34	D	27	D
Panel Thickness (Inches)	**Span Between Supports (Feet) / Triple Span**											
	4		**6**		**8**		**10**		**12**		**14**	
2	54	S	35	S	25	D	18	D	13	D	-	-
2.5	69	S	44	S	33	S	24	D	18	D	13	D
3	83	S	53	S	39	S	31	D	23	D	17	D
4	113	S	72	S	53	S	42	S	33	D	26	D

TABLE 16 - Allowable Positive and Negative Transverse Wind Loads 18-Inch-Wide Panel - 0.040 Inch Aluminum Skin – 1/2" Reveal												
Panel Thickness (Inches)	**Span Between Supports (Feet) / Single Span**											
	4		**6**		**8**		**10**		**12**		**14**	
2	60	S	34	D	21	D	14	D	-	-	-	-
2.5	76	S	46	D	29	D	20	D	14	D	-	-
3	91	S	57	D	37	D	26	D	18	D	13	D
4	115	N	77	N	54	D	38	D	28	D	20	B
Panel Thickness (Inches)	**Span Between Supports (Feet) / Double Span**											
	4		**6**		**8**		**10**		**12**		**14**	
2	55	S	35	S	25	D	18	D	13	D	10	D
2.5	70	S	45	S	33	S	24	D	18	D	14	D
3	85	S	55	S	40	S	31	D	23	D	18	D
4	105	N	70	N	52	N	42	N	34	D	27	D
Panel Thickness (Inches)	**Span Between Supports (Feet) / Triple Span**											
	4		**6**		**8**		**10**		**12**		**14**	
2	54	S	35	S	25	D	18	D	13	D	-	-
2.5	69	S	44	S	33	S	24	D	18	D	13	D
3	83	S	53	S	39	S	31	D	23	D	17	D
4	113	S	72	S	53	S	42	S	33	D	26	D

DW2000 AND DW4000 ALUMINUM SKIN PANELS WITH 1/2" REVEAL (CONTINUED)

TABLE 17 - Allowable Positive and Negative Transverse Wind Loads 24-Inch-Wide Panel - 0.040 Inch Aluminum Skin – 1/2" Reveal												
Panel Thickness (Inches)	**Span Between Supports (Feet) / Single Span**											
	4		**6**		**8**		**10**		**12**		**14**	
2	60	S	34	D	21	D	14	D	-	-	-	-
2.5	76	S	46	D	29	D	20	D	14	D	-	-
3	86	N	57	D	37	D	26	D	18	D	13	D
4	86	N	58	N	43	N	35	N	28	D	20	B
Panel Thickness (Inches)	**Span Between Supports (Feet) / Double Span**											
	4		**6**		**8**		**10**		**12**		**14**	
2	55	S	35	S	25	D	18	D	13	D	10	D
2.5	70	S	45	S	33	S	24	D	18	D	14	D
3	79	N	52	N	39	N	31	D	23	D	18	D
4	79	N	52	N	39	N	31	N	26	N	22	N
Panel Thickness (Inches)	**Span Between Supports (Feet) / Triple Span**											
	4		**6**		**8**		**10**		**12**		**14**	
2	54	S	35	S	25	D	18	D	13	D	-	-
2.5	69	S	44	S	33	S	24	D	18	D	13	D
3	83	S	53	S	39	S	31	D	23	D	17	D
4	89	N	60	N	45	N	36	N	30	N	26	N

TABLE 18 - Allowable Positive and Negative Transverse Wind Loads 30-Inch-Wide Panel - 0.040 Inch Aluminum Skin – 1/2" Reveal												
Panel Thickness (Inches)	**Span Between Supports (Feet) / Single Span**											
	4		**6**		**8**		**10**		**12**		**14**	
2	60	S	34	D	21	D	14	D	-	-	-	-
2.5	69	N	46	D	29	D	20	D	14	D	-	-
3	69	N	46	N	35	N	26	D	18	D	13	D
4	69	N	46	N	35	N	28	N	23	N	20	N
Panel Thickness (Inches)	**Span Between Supports (Feet) / Double Span**											
	4		**6**		**8**		**10**		**12**		**14**	
2	55	S	35	S	25	D	18	D	13	D	10	D
2.5	63	N	42	N	31	N	24	D	18	D	14	D
3	63	N	42	N	31	N	25	N	21	N	18	N
4	63	N	42	N	31	N	25	N	21	N	18	N
Panel Thickness (Inches)	**Span Between Supports (Feet) / Triple Span**											
	4		**6**		**8**		**10**		**12**		**14**	
2	54	S	35	S	25	D	18	D	13	D	-	-
2.5	69	S	44	S	33	S	24	D	18	D	13	D
3	71	N	48	N	36	N	29	N	23	D	17	D
4	71	N	48	N	36	N	29	N	24	N	20	N

DW2000 AND DW4000 ALUMINUM SKIN PANELS WITH 1/2" REVEAL (CONTINUED)

TABLE 19 - Allowable Positive and Negative Transverse Wind Loads 36-Inch-Wide Panel - 0.040 Inch Aluminum Skin – 1/2" Reveal												
Panel Thickness (Inches)	**Span Between Supports (Feet) / Single Span**											
	4		**6**		**8**		**10**		**12**		**14**	
2	58	N	34	D	21	D	14	D	-	-	-	-
2.5	58	N	38	N	29	N	20	D	14	D	-	-
3	58	N	38	N	29	N	23	N	18	D	13	D
4	58	N	38	N	29	N	23	N	19	N	16	N
Panel Thickness (Inches)	**Span Between Supports (Feet) / Double Span**											
	4		**6**		**8**		**10**		**12**		**14**	
2	52	N	35	N	25	D	18	D	13	D	10	D
2.5	52	N	35	N	26	N	21	N	17	N	14	D
3	52	N	35	N	26	N	21	N	17	N	15	N
4	52	N	35	N	26	N	21	N	17	N	15	N
Panel Thickness (Inches)	**Span Between Supports (Feet) / Triple Span**											
	4		**6**		**8**		**10**		**12**		**14**	
2	54	S	35	S	25	D	18	D	13	D	-	-
2.5	60	N	40	N	30	N	24	N	18	D	13	D
3	60	N	40	N	30	N	24	N	20	N	17	N
4	60	N	40	N	30	N	24	N	20	N	17	N

TABLE 20 - Allowable Positive and Negative Transverse Wind Loads 42-Inch-Wide Panel - 0.040 Inch Aluminum Skin – 1/2" Reveal												
Panel Thickness (Inches)	**Span Between Supports (Feet) / Single Span**											
	4		**6**		**8**		**10**		**12**		**14**	
2	49	N	33	N	21	D	14	D	-	-	-	-
2.5	49	N	33	N	25	N	20	D	14	D	-	-
3	49	N	33	N	25	N	20	N	16	N	13	D
4	49	N	33	N	25	N	20	N	16	N	14	N
Panel Thickness (Inches)	**Span Between Supports (Feet) / Double Span**											
	4		**6**		**8**		**10**		**12**		**14**	
2	45	N	30	N	22	N	18	N	13	D	10	D
2.5	45	N	30	N	22	N	18	N	15	N	13	N
3	45	N	30	N	22	N	18	N	15	N	13	N
4	45	N	30	N	22	N	18	N	15	N	13	N
Panel Thickness (Inches)	**Span Between Supports (Feet) / Triple Span**											
	4		**6**		**8**		**10**		**12**		**14**	
2	51	N	34	N	25	D	18	D	13	D	-	-
2.5	51	N	34	N	26	N	20	N	17	N	13	D
3	51	N	34	N	26	N	20	N	17	N	15	N
4	51	N	34	N	26	N	20	N	17	N	15	N

VALE and QUADCORE B VALE STEEL SKIN PANELS

TABLE 21 - Allowable Positive and Negative Transverse Loads
36-Inch-Wide Panel - 22 Gauge Exterior/24 Gauge Interior Steel Skin (L/180)(PSF)

Panel Thickness (Inches)	Span Between Supports (Feet) / Single Span													
	2		4		6		8		10		12		14	
3	116	N	58	N	39	N	29	N	23	N	19	N	15	B
4	116	N	58	N	39	N	29	N	23	N	19	N	17	N
Panel Thickness (Inches)	Span Between Supports (Feet) / Double Span													
	2		4		6		8		10		12		14	
3	89	N	45	N	30	N	22	N	18	N	15	N	13	N
4	89	N	45	N	30	N	22	N	18	N	15	N	13	N
Panel Thickness (Inches)	Span Between Supports (Feet) / Triple Span													
	2		4		6		8		10		12		14	
3	102	N	51	N	34	N	25	N	20	N	17	N	15	N
4	102	N	51	N	34	N	25	N	20	N	17	N	15	N

DESIGNWALL 2000R STEEL SKIN PANELS

TABLE 22 - Allowable Positive and Negative Transverse Loads
12 Inch Wide Panel - 22 Gauge Exterior/24 Gauge Interior Steel Skin (L/180)(PSF)

Panel Thickness (Inches)	Span Between Supports (Feet) / Single Span													
	2		4		6		8		10		12		14	
2.5	54	S	27	S	18	S	14	S	11	S	-		-	
3	83	S	41	S	28	S	21	S	17	S	14	S	12	S
4	292	S	146	S	73	B	41	B	26	B	18	B	13	B
Panel Thickness (Inches)	Span Between Supports (Feet) / Double Span													
	2		4		6		8		10		12		14	
2.5	43	S	22	S	14	S	11	S	-		-		-	
3	66	S	33	S	22	S	17	S	13	S	11	S	-	
4	234	S	117	S	73	B	41	B	26	B	18	B	13	B
Panel Thickness (Inches)	Span Between Supports (Feet) / Triple Span													
	2		4		6		8		10		12		14	
2.5	45	S	23	S	15	S	11	S	-		-		-	
3	69	S	34	S	23	S	17	S	14	S	11	S	-	
4	243	S	122	S	81	S	52	B	33	B	23	B	17	B

DESIGNWALL 2000R SKIN PANELS (CONTINUED)

TABLE 23 - Allowable Positive and Negative Transverse Loads
16 Inch Wide Panel - 22 Gauge Exterior/24 Gauge Interior Steel Skin (L/180)(PSF)

Panel Thickness (Inches)	Span Between Supports (Feet) / Single Span													
	2		4		6		8		10		12		14	
2.5	54	S	27	S	18	S	14	S	11	S	-		-	
3	83	S	41	S	28	S	21	S	17	S	14	S	12	S
4	234	N	117	N	73	B	41	B	26	B	18	B	13	B
Panel Thickness (Inches)	Span Between Supports (Feet) / Double Span													
	2		4		6		8		10		12		14	
2.5	43	S	22	S	14	S	11	S	-		-		-	
3	66	S	33	S	22	S	17	S	13	S	11	S	-	
4	234	S	117	S	73	B	41	B	26	B	18	B	13	B
Panel Thickness (Inches)	Span Between Supports (Feet) / Triple Span													
	2		4		6		8		10		12		14	
2.5	45	S	23	S	15	S	11	S	-		-		-	
3	69	S	34	S	23	S	17	S	14	S	11	S	-	
4	236	N	118	N	79	N	52	B	33	B	23	B	17	B

TABLE 24 - Allowable Positive and Negative Transverse Loads
20 Inch Wide Panel - 22 Gauge Exterior/24 Gauge Interior Steel Skin (L/180)(PSF)

Panel Thickness (Inches)	Span Between Supports (Feet) / Single Span													
	2		4		6		8		10		12		14	
2.5	54	S	27	S	18	S	14	S	11	S	-		-	
3	83	S	41	S	28	S	21	S	17	S	14	S	12	S
4	187	N	93	N	62	N	41	B	26	B	18	B	13	B
Panel Thickness (Inches)	Span Between Supports (Feet) / Single Span													
	2		4		6		8		10		12		14	
2.5	43	S	22	S	14	S	11	S	-		-		-	
3	66	S	33	S	22	S	17	S	13	S	11	S	-	
4	201	N	101	N	67	N	41	B	26	B	18	B	13	B
Panel Thickness (Inches)	Span Between Supports (Feet) / Single Span													
	2		4		6		8		10		12		14	
2.5	45	S	23	S	15	S	11	S	-		-		-	
3	69	S	34	S	23	S	17	S	14	S	11	S	-	
4	189	N	94	N	63	N	47	N	33	B	23	B	17	B

DESIGNWALL 2000R SKIN PANELS (CONTINUED)

TABLE 25 - Allowable Positive and Negative Transverse Loads
24 Inch Wide Panel - 22 Gauge Exterior/24 Gauge Interior Steel Skin (L/180)(PSF)

Panel Thickness (Inches)	Span Between Supports (Feet) / Single Span													
	2		4		6		8		10		12		14	
2.5	54	S	27	S	18	S	14	S	11	S	-		-	
3	83	S	41	S	28	S	21	S	17	S	14	S	12	S
4	156	N	78	N	52	N	39	N	26	B	18	B	13	B
Panel Thickness (Inches)	Span Between Supports (Feet) / Double Span													
	2		4		6		8		10		12		14	
2.5	43	S	22	S	14	S	11	S	-		-		-	
3	66	S	33	S	22	S	17	S	13	S	11	S	-	
4	168	N	84	N	56	N	41	B	26	B	18	B	13	B
Panel Thickness (Inches)	Span Between Supports (Feet) / Triple Span													
	2		4		6		8		10		12		14	
2.5	45	S	23	S	15	S	11	S	-		-		-	
3	69	S	34	S	23	S	17	S	14	S	11	S	-	
4	157	N	79	N	52	N	39	N	31	N	23	B	17	B

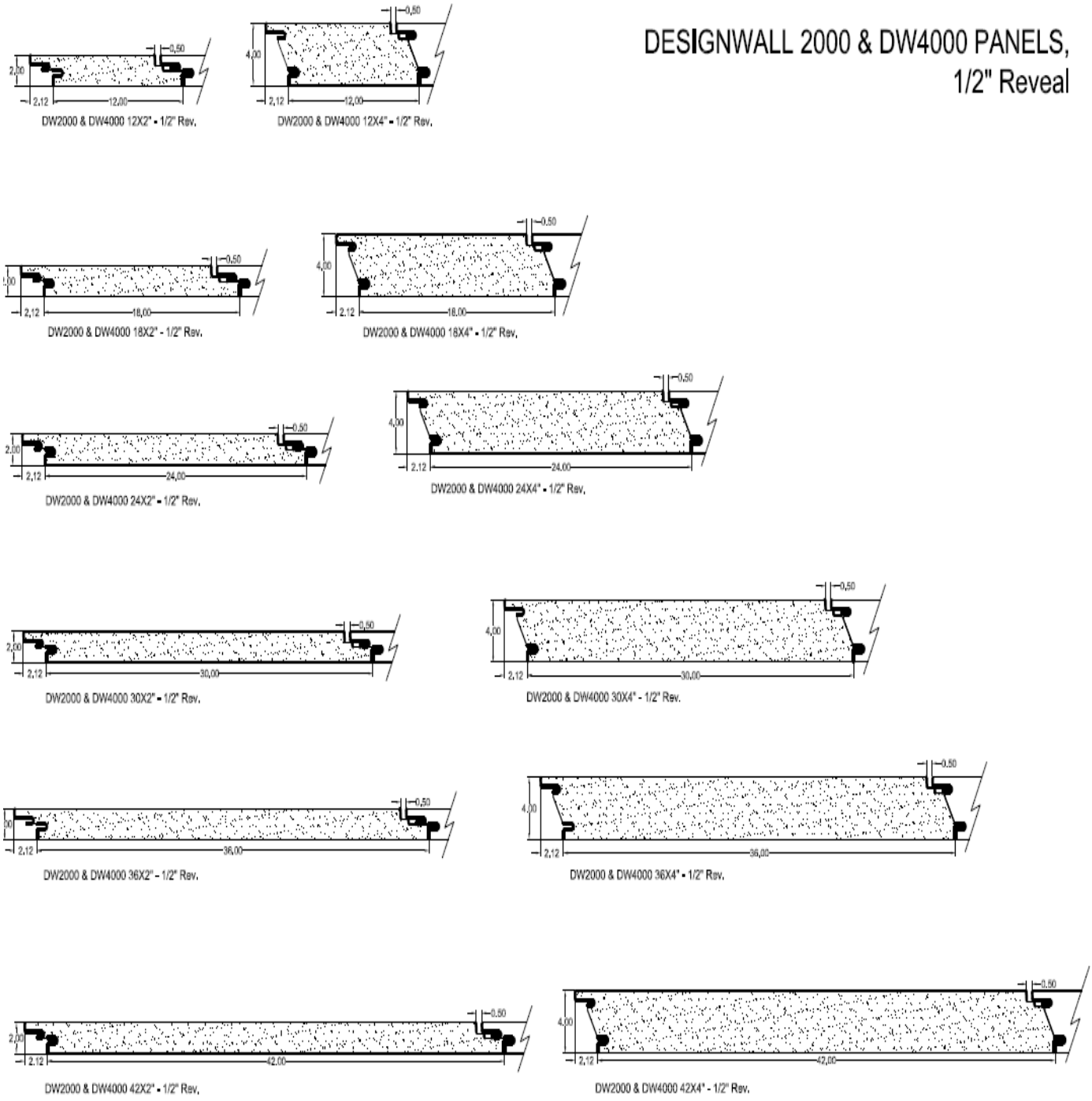

Figure 1a – DESIGNWALL 2000 and 4000 Panels - 1/2" Reveal

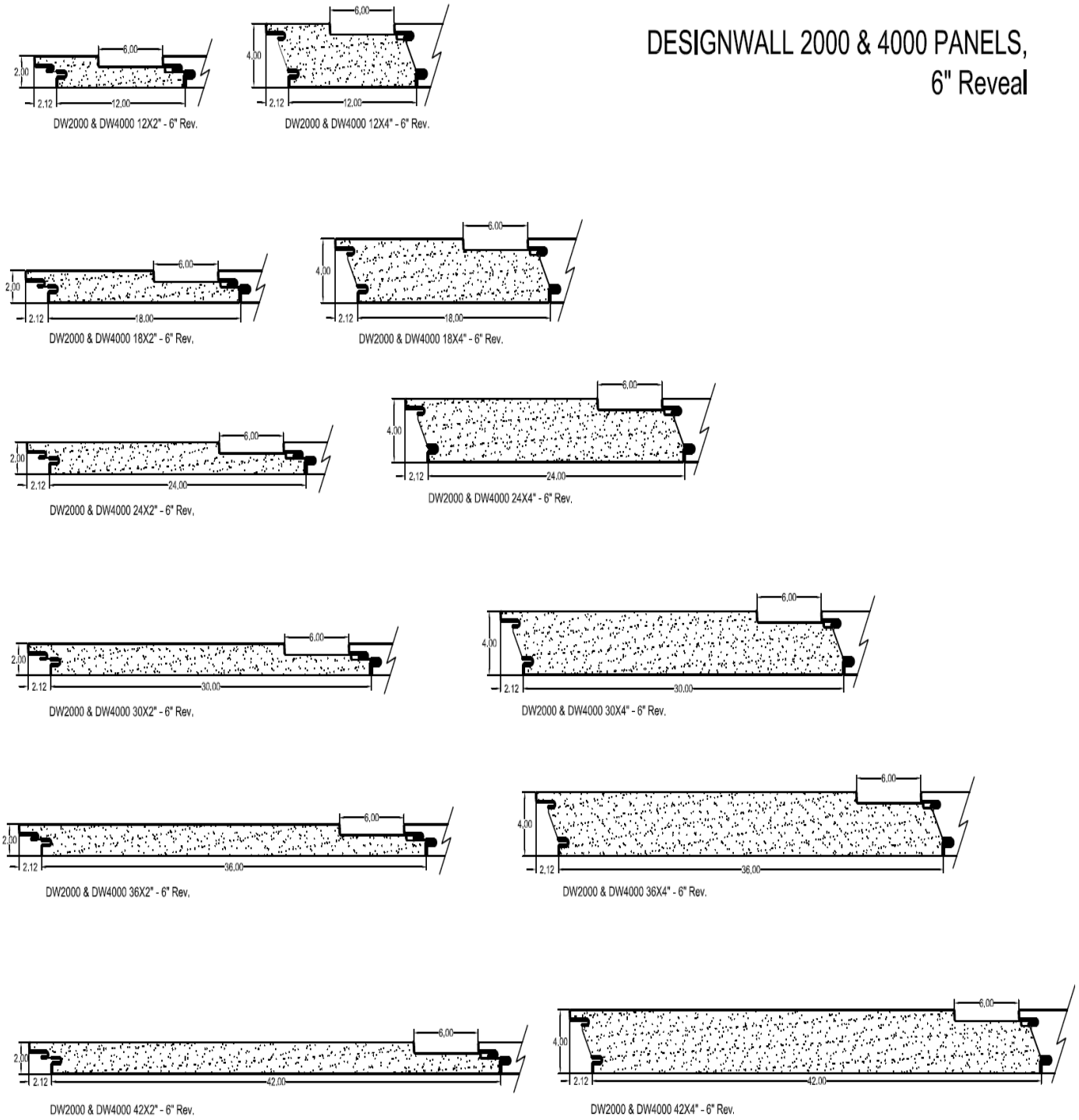

Figure 1b – DESIGNWALL 2000 and 4000 Panels - 6" Reveal

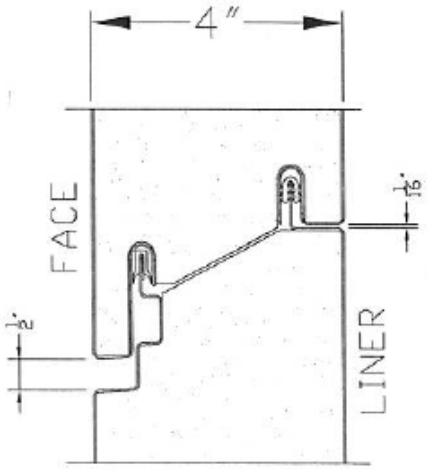

Figure 2 – Dual Tongue and Groove Joint Engagement

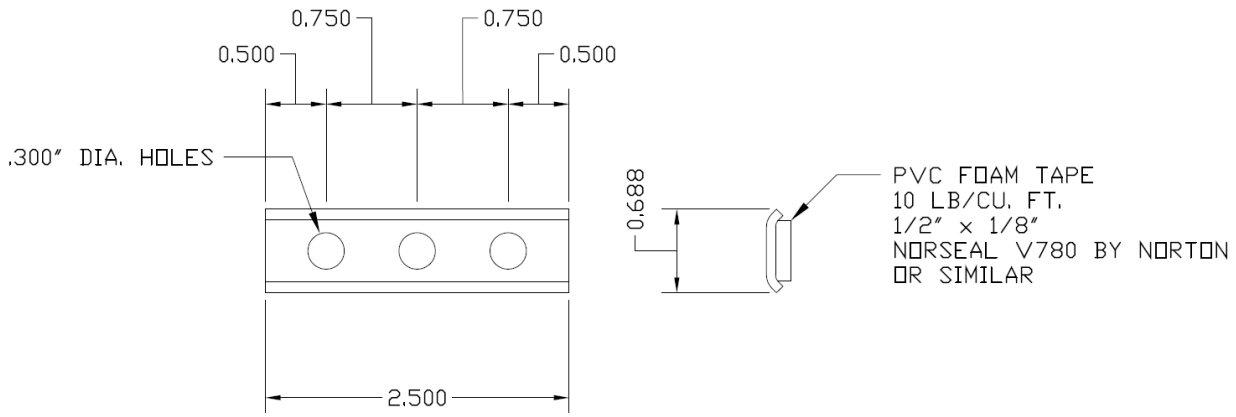

Figure 3 – Stainless Steel Hidden Clip

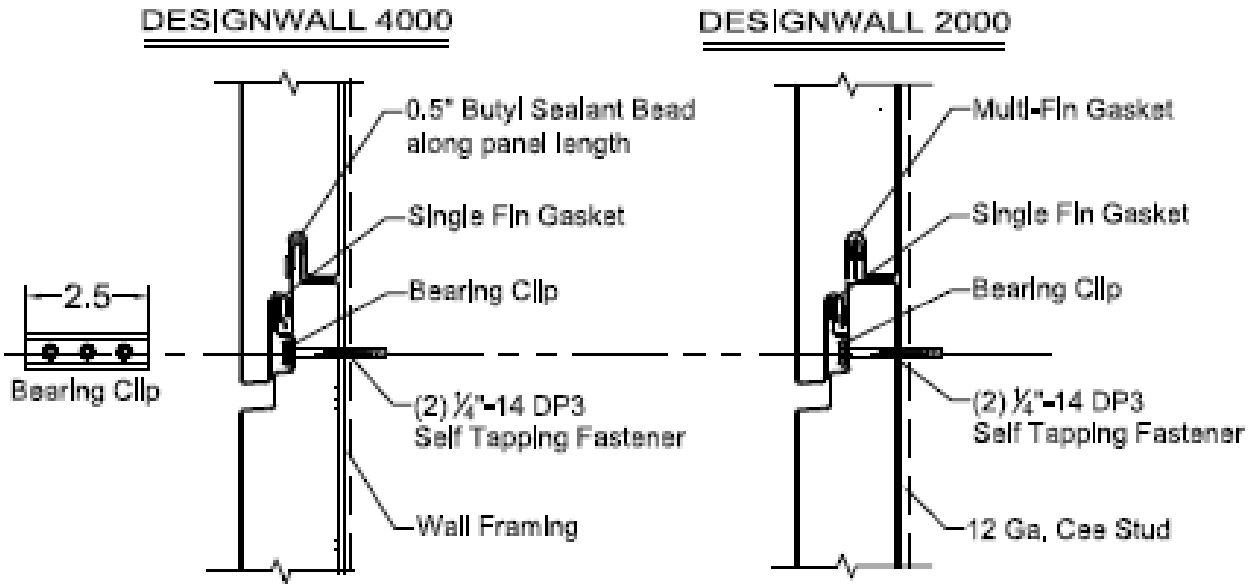

Figure 4 – Designwall 2000 and Designwall 4000 Installation Details for the Dual Tongue and Groove Joint

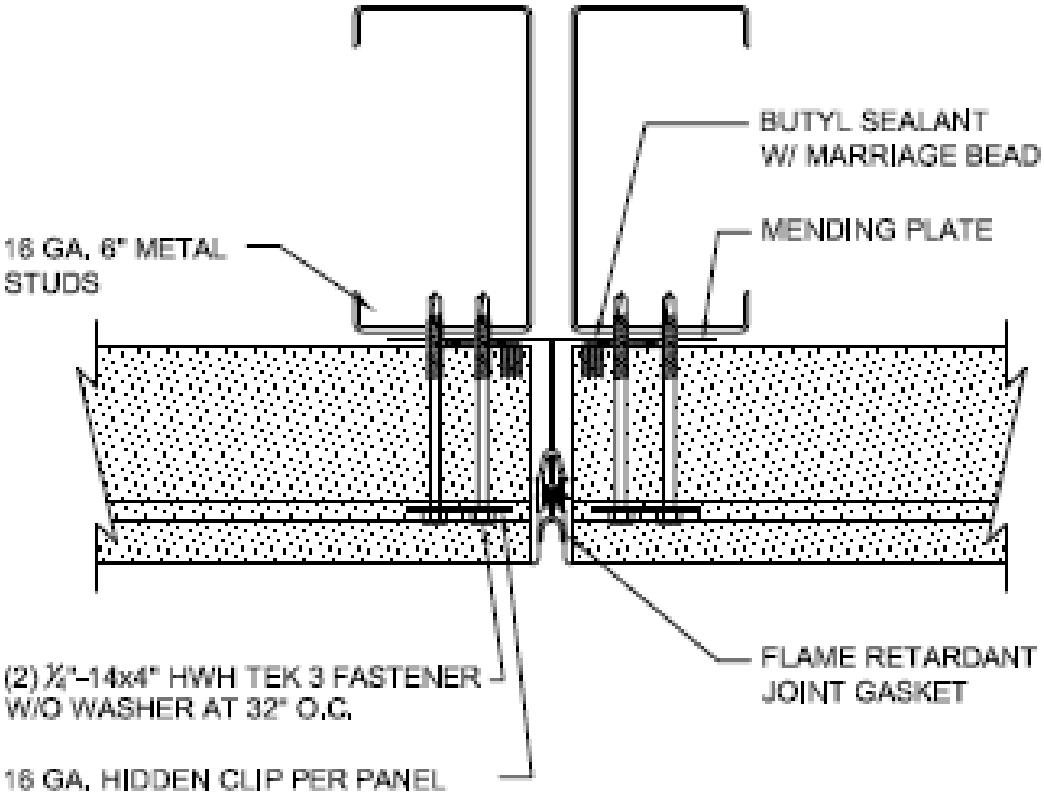

Figure 5 – DESIGNWALL 2000 and DESIGNWALL 4000 Vertical Butt Joint Detail

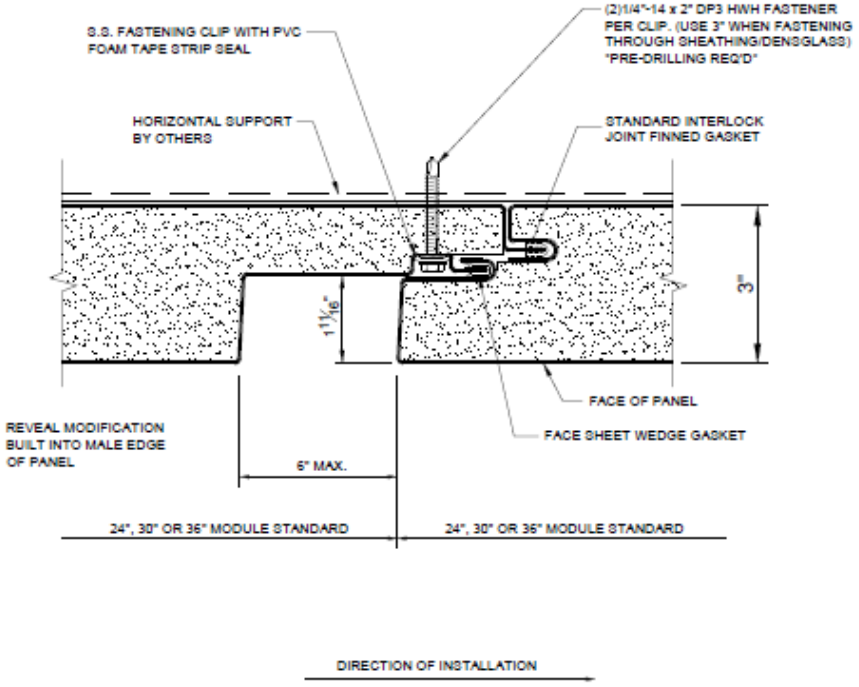

Figure 6 – DESIGNWALL 2000 3" DEEP JOINT PANEL

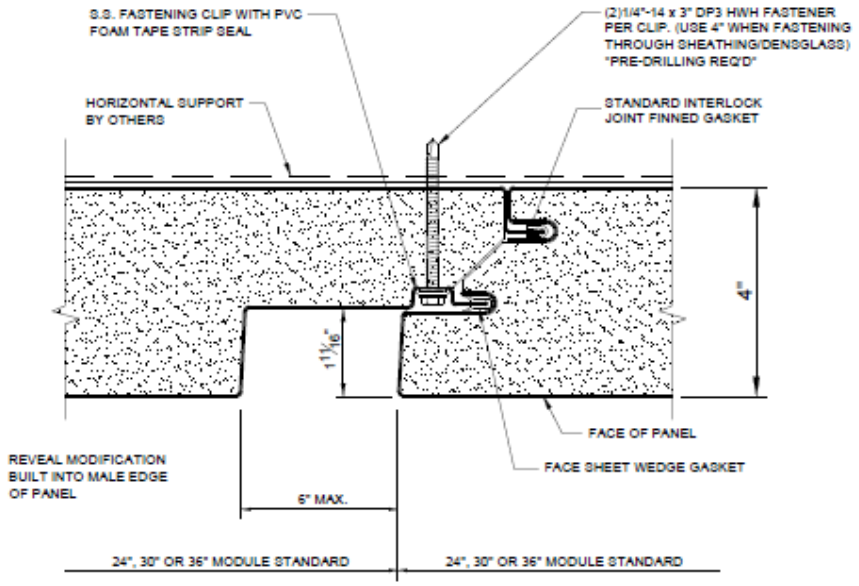

Figure 7 – DESIGNWALL 2000 4" DEEP JOINT PANEL

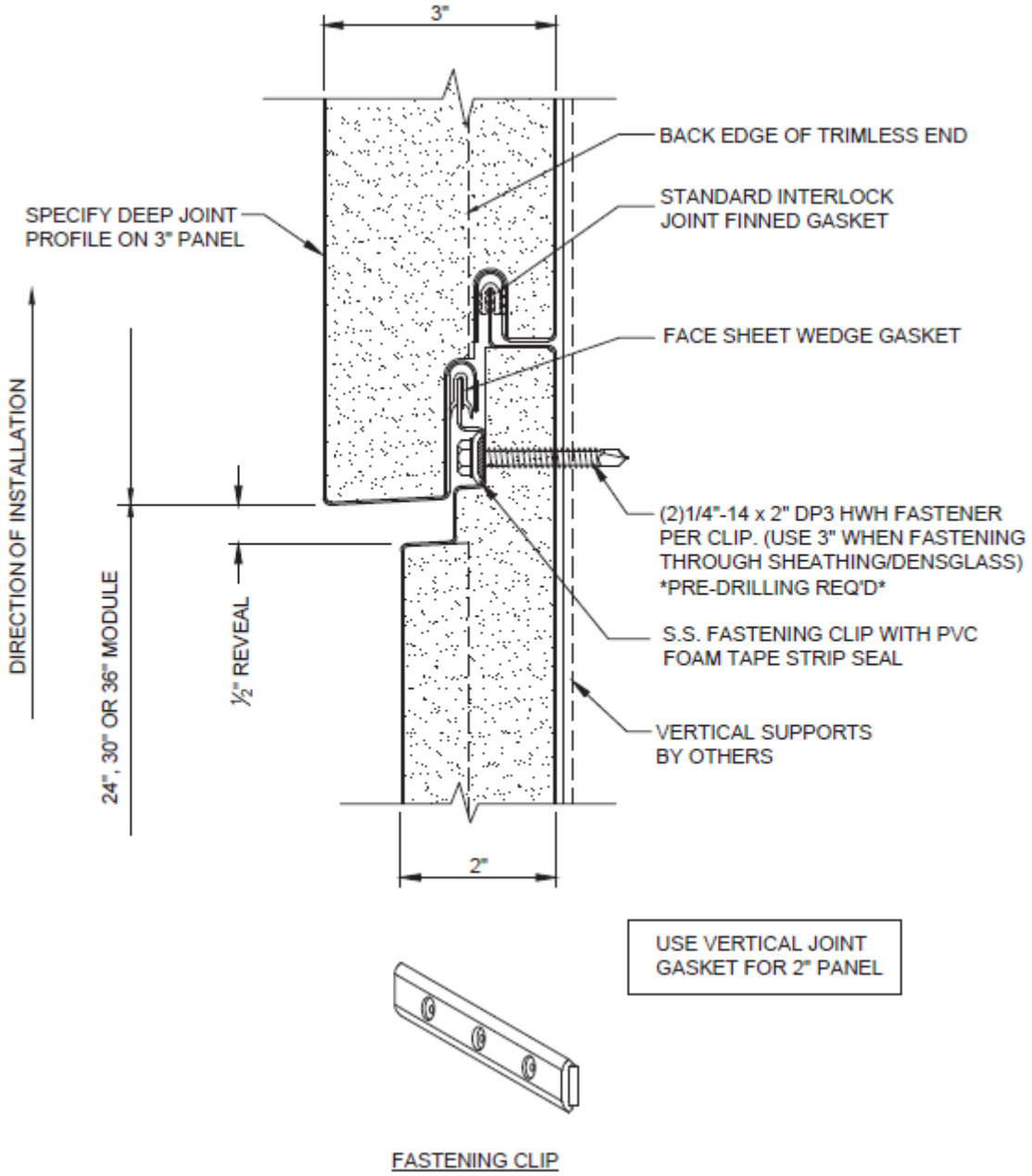

Figure 8 – DESIGNWALL 2000 3" TO 2" DEEP JOINT PANEL INTEGRATION

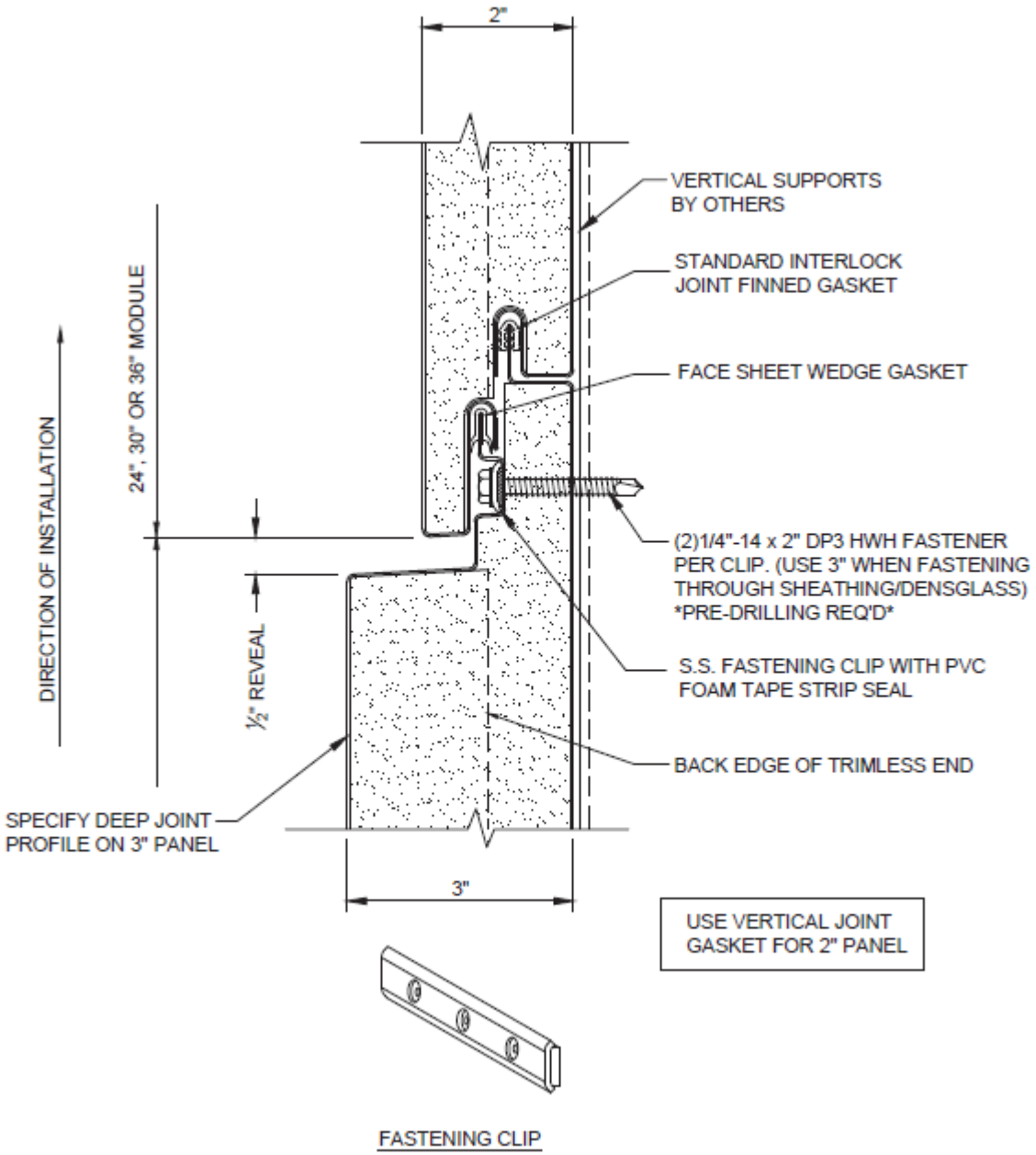

Figure 9 – DESIGNWALL 2000 2" TO 3" DEEP JOINT PANEL INTEGRATION

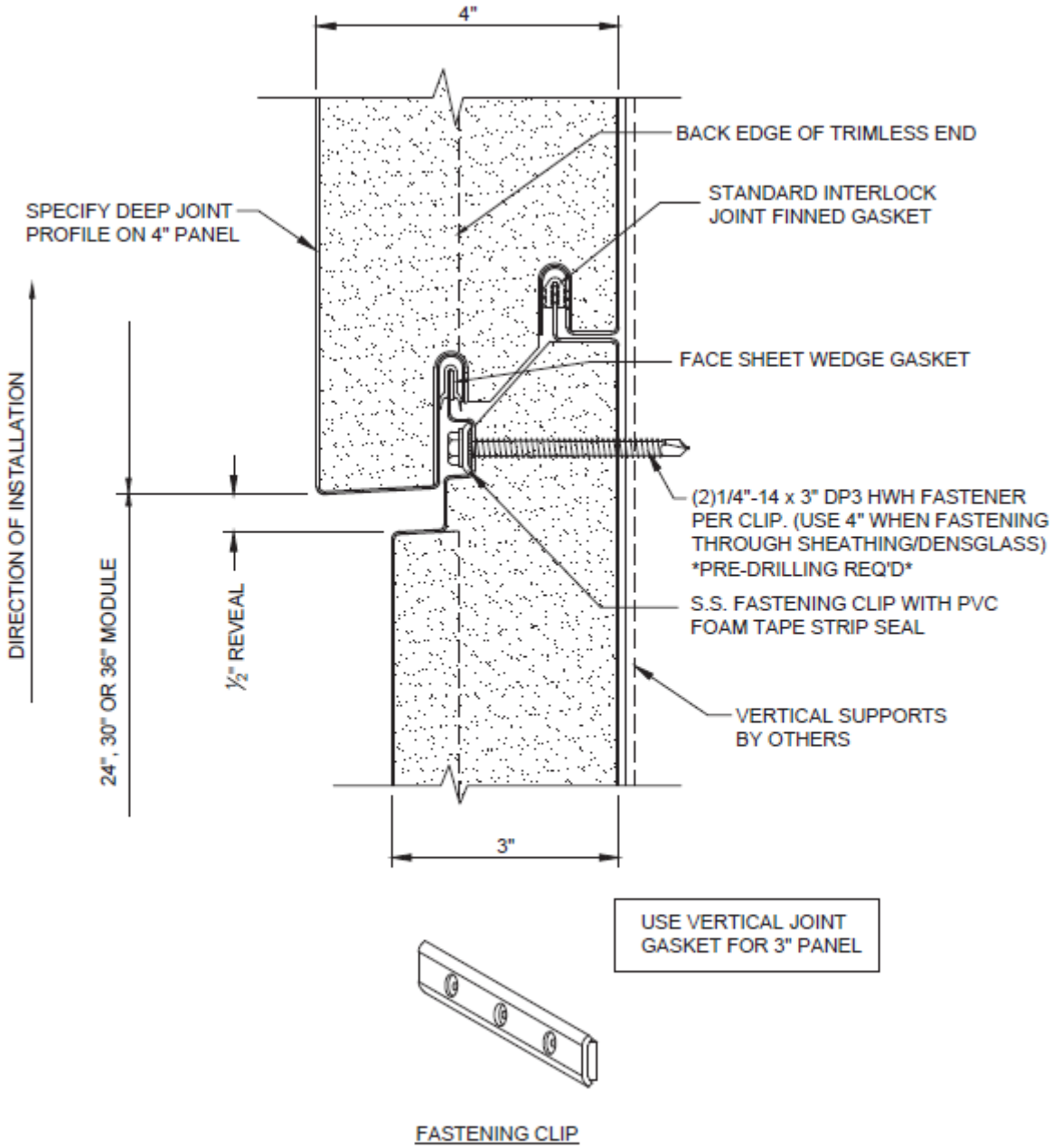

Figure 10 – DESIGNWALL 2000 4" TO 3" DEEP JOINT PANEL INTEGRATION

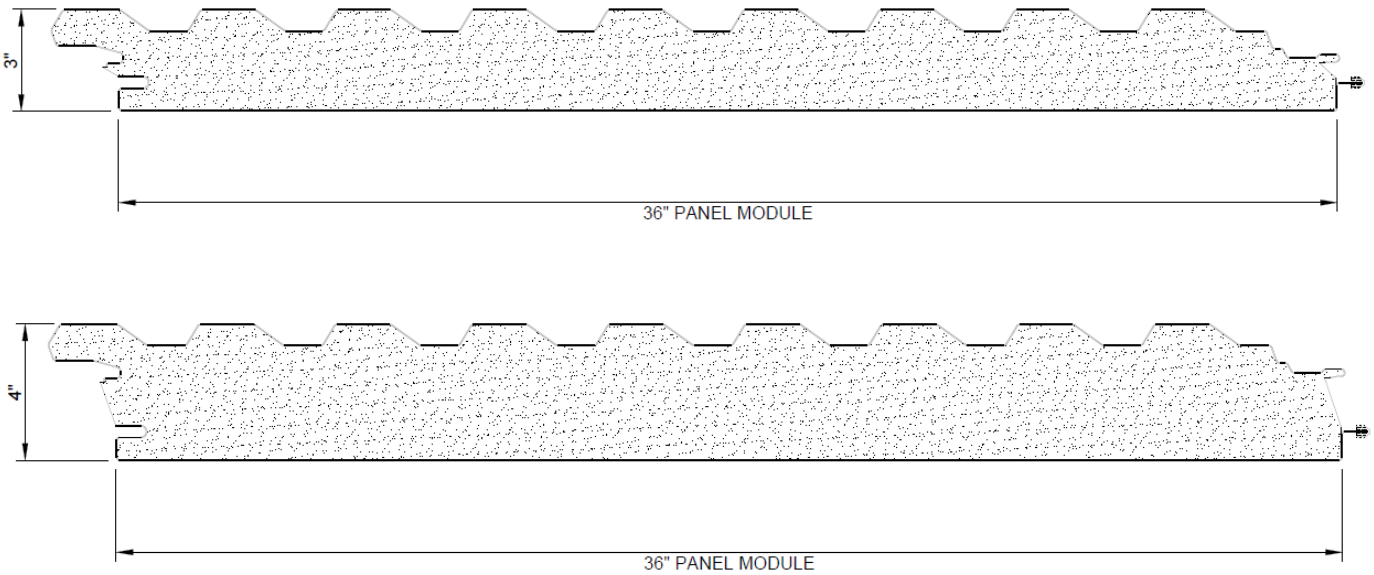

Figure 11 – VALE and Quadcore B VALE Panels

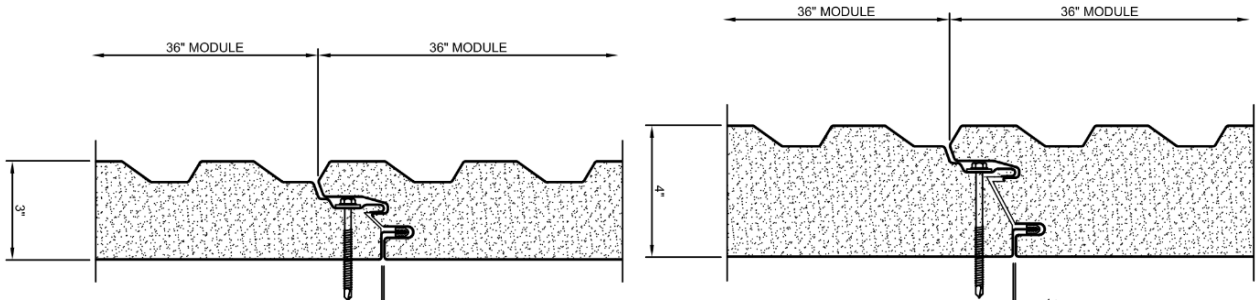

Figure 12 – VALE and Quadcore B VALE Panel joint detail

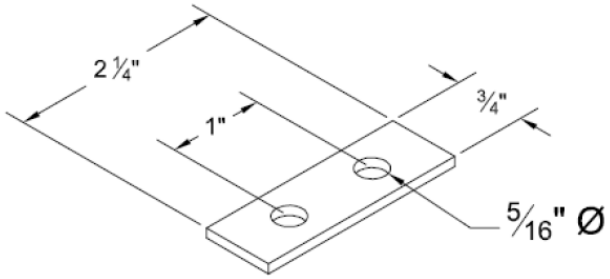

Figure 13 – VALE and Quadcore B VALE panel 12 GA stainless steel Two-Hole Hidden Fastener Clip

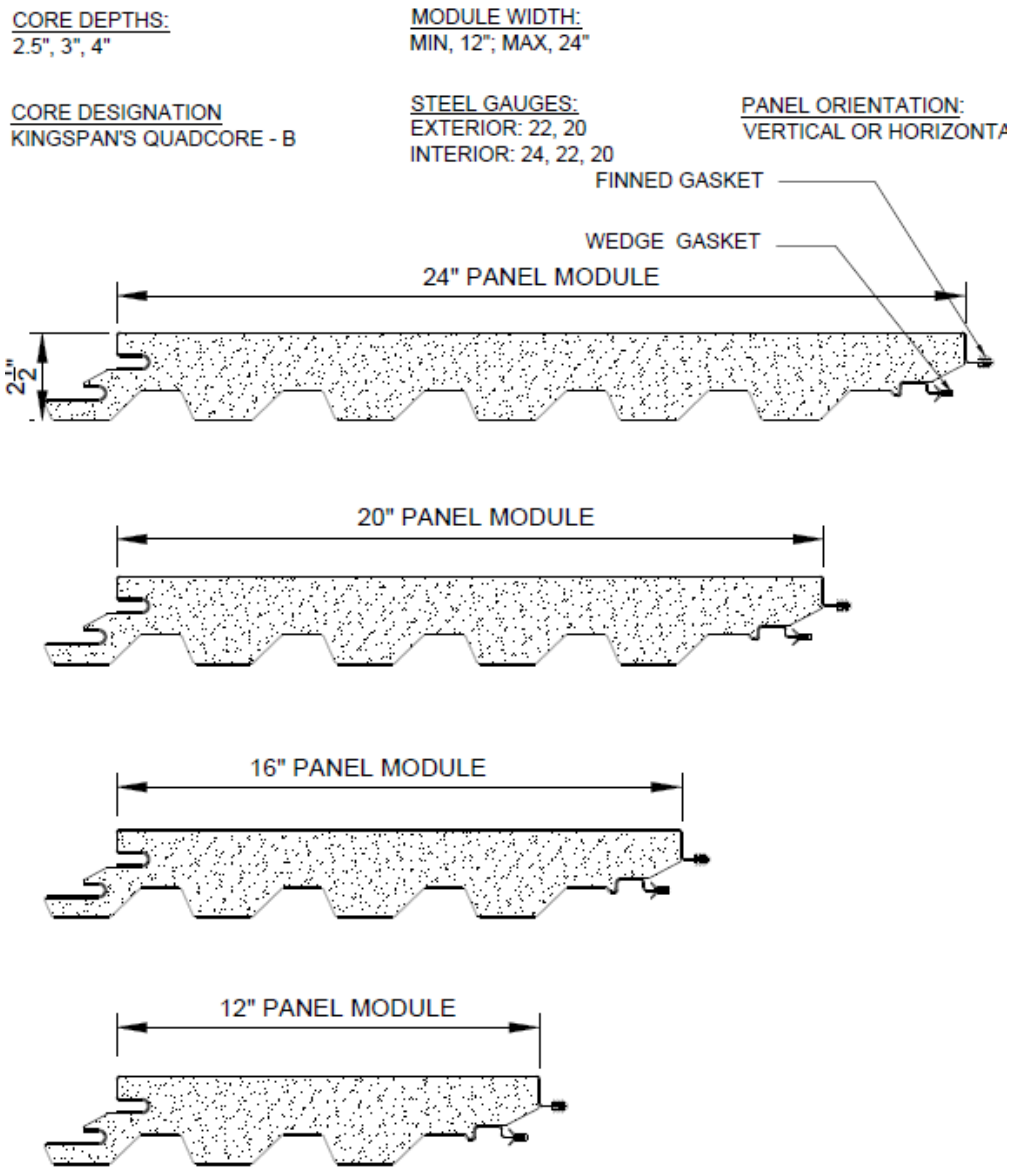

Figure 14 – DESIGNWALL 2000R Panels