Code Compliance Research Report
CCRR-0241

Issue Date: 07-18-2016
Revision Date: 07-26-2023
Renewal Date: 07-31-2024

DIVISION: 07 00 00 – THERMAL AND MOISTURE
Section: 07 40 46 – Plastic Siding

REPORT HOLDER:
Westlake Royal Building Products
2801 Post Oak Road
Houston, TX 77056
800-521-8486

ADDITIONAL LISTEES:

Associated Materials, LLC
3773 State Road
Cuyahoga Falls, OH 44223

Norandex
300 Executive Parkway, Suite 100
Hudson, OH 44236

Stylecrest
2450 Enterprise Street
Fremont, OH

REPORT SUBJECT:
Foundry Premium Vinyl Siding

1.0 SCOPE OF EVALUATION

1.1 This Research Report addresses compliance with the following Codes:

- 2021, 2018 and 2015 *International Building Code®* (IBC)
- 2021, 2018 and 2015 *International Residential Code®* (IRC)
- 2023, 2020 *Florida Building Code* excluding High Velocity Hurricane Zone (see Section 9.1)
- 2022 *California Building Code* (see Section 9.2)
- 2022 *California Green Building Standards Code (CALGreen), Title 24, Part 11 (see Section 9.2)*
- 2013 *Abu Dhabi Building Code* (See Section 9.3)
- *2020 ICC 700 National Green Building Standard* (See Section 9.4)

NOTE: This report references the most recent edition of the codes cited. Section numbers in earlier editions of the codes may differ.

1.2 Foundry Premium Vinyl Siding has been evaluated for the following properties:

- Durability
- Weather Resistance
- Wind Load Resistance

1.3 Foundry Premium Vinyl Siding has been evaluated for the following uses:

- Use as an exterior siding attached to an approved structural sheathing

2.0 STATEMENT OF COMPLIANCE

Foundry Premium Vinyl Siding complies with the Codes listed in Section 1.1, for the properties stated in Section 1.2 and uses stated in Section 1.3, when installed as described in this report, including the Conditions of Use stated in Section 6.

3.0 DESCRIPTION

Foundry Premium Vinyl Siding is a polyvinyl chloride (PVC) siding provided in various styles, shapes and exposure widths. See Figures 1 through 10 for drawings.

4.0 PERFORMANCE CHARACTERISTICS

4.1 Foundry Premium Vinyl Siding products are not evaluated for resisting positive wind pressure and must be installed over sheathing materials designed and approved for the required positive design wind pressure.

4.2 Foundry Premium Vinyl Siding installed in accordance with the code specified installation is recognized for use within the corresponding limitations prescribed by the code for wind speed, exposure category and other conditions, See Section 5.1 for applications within the code prescribed conditions.

4.3 Foundry Premium Vinyl Siding maximum allowable wind pressures are given in Table 1 and 2 for siding installed in accordance with Section 5.2.

5.0 INSTALLATION

5.1 General:

Foundry Premium Vinyl Siding must be installed in accordance with the manufacturer's published installation instructions, the applicable Code, and this Research Report. A copy of the manufacturer's instructions must be available on the jobsite during installation.

5.2 Application:

5.2.1 For IBC and FBC applications: Areas where the design wind pressure does not exceed 30 pounds per square foot, installation shall comply with the prescriptive requirements in IBC Section 1404.14 and FBC Section 1405.14. For areas where the design wind pressure exceeds 30 pounds per square foot, installation shall comply with one of the fastening methods specified in Tables 1 and 2.

5.2.2 For IRC and FBC-Residential applications: Areas where the design wind pressure does not exceed 30 pounds per square foot, installation shall comply with the prescriptive requirements in Section R703.11.1 and Table R703.3(1) of the IRC and FBC-Residential codes. For areas where the design wind pressure exceeds 30 pounds per square foot, installation shall comply with one of the fastening methods specified in Table 1 and 2.

5.2.3 Foundry Premium Vinyl Siding shall be installed over structural wood sheathing complying with DOC PS 1, DOC PS 2 or ANSI/APA PRG 320 as specified in Section 2303.1.5 of the IBC and FBC.

5.2.4 The sheathing, water-resistive barrier and flashing must be constructed to prevent the accumulation of water within the wall assembly and provide a means for draining water that enters the assembly to the exterior, in accordance with IBC Section 1402.2 and IRC Section R703.1.1.

5.2.5 Flashing shall be installed in accordance with IBC Section 1404.4, FBC Section 1405.4, and Section R703.4 of the IRC and FBC-Residential.

5.2.6 Protection against condensation shall be provided in accordance with IBC Section 1404.3 and FBC Section 1405.3.

5.2.7 Fasteners shall be corrosion-resistant nails, staples or screws with dimensions and fastening schedule as described in Table 1.

6.0 CONDITIONS OF USE

6.1 Installation must comply with this Research Report, the manufacturer's published installation instructions and the applicable Code. In the event of a conflict between the manufacturer's instructions and this report, this report governs.

6.2 Foundry Premium Vinyl Siding products listed in this report are limited to exterior use in Type V-B (IBC and FBC) construction and construction permitted by the IRC and FBC-Residential.

6.3 Wind design pressures determined from nominal design wind speeds (V_{asd}) in accordance with Chapter 16 of the IBC and FBC, and Section R301.2.1.1 of the IRC and FBC-Residential, shall not exceed the allowable wind loads in Table 1.

6.4 Exterior walls must be braced or sheathed to resist racking loads with approved materials in accordance with the applicable code.

6.5 The products are manufactured by Westlake Royal Building Products under a quality control program with inspections by Intertek Testing Services NA, Inc.

7.0 SUPPORTING EVIDENCE

7.1 Manufacturer's drawings and installation instructions.

7.2 The reports of testing and engineering analysis demonstrating compliance with the performance requirements of ICC-ES AC37, Acceptance Criteria for Vinyl Siding, Revised October 2017 and of ASTM D 3679-17, Rigid Poly (Vinyl Chloride) (PVC) Siding.

7.3 Documentation of an Intertek approved quality control system for the manufacturing of products recognized in this report.

8.0 IDENTIFICATION

Foundry Premium Vinyl Siding are identified with the manufacturer's name (Westlake Royal Building Products), address and telephone number, the product name, the following statement: "Conforms to ASTM Specification D3679", the Intertek Mark as shown below, and the Code Compliance Research Report number (CCRR-0241).

CODE COMPLIANCE
Intertek
CCRR-0241

9.0 OTHER CODES

9.1 FLORIDA BUILDING CODE

9.1.1 Scope of Evaluation:

Foundry Premium Vinyl Siding was evaluated for compliance with the *Florida Building Code.*

9.1.2 Conclusion:

Foundry Premium Vinyl Siding, described in Sections 2.0 through 7.0 of this Research Report, comply with the 2023 and 2020 *Florida Building Code*, subject to the following condition:

- Use of Foundry Premium Vinyl Siding for compliance with the High-Velocity Hurricane Zone provisions of the *Florida Building Code – Building* and the *Florida Building Code – Residential* has not been evaluated and is outside the scope of this Research Report.

Intertek is an approved evaluation entity and quality assurance entity pursuant to Florida Statute 553.842 – *Product Evaluation and Approval*.

9.2 CALIFORNIA BUILDING CODE

9.2.1 Scope of Evaluation:

9.2.1.1 The Foundry Premium Vinyl Siding was evaluated for compliance to the 2022 *California Building Code*.

9.2.1.2 Use of Foundry Premium Vinyl Siding for compliance with Sections A4.405.1.3 (prefinished materials) and A5.406.2 (reduced maintenance) of the 2022 *California Green Building Standards Code (CALGreen),* Title 24, Part 11.

9.2.2 Conclusion: The Foundry Premium Vinyl Siding, described in sections 2.0 through 7.0 of this Research Report complies with the 2022 *California Building Code*, excluding Chapter 7A, and with the 2022 *California Green Building Standards Code,* Title 24, Part 11 for prefinished materials and reduced maintenance.

9.3 ABU DHABI BUILDING CODE

9.3.1 Scope of Evaluation: The Foundry Premium Vinyl Siding was evaluated for compliance to the 2013 *Abu Dhabi Building Code*.

9.3.2 Conclusion: The Foundry Premium Vinyl Siding described in sections 2.0 through 7.0 of this Research Report complies with the 2013 *Abu Dhabi Building Code*.

9.4 ICC 700

9.4.1 Scope of Evaluation: The Foundry Premium Vinyl Siding was evaluated for compliance to the 2020 *ICC 700.*

9.4.2 Conclusion: The Foundry Premium Vinyl Siding described in sections 2.0 through 7.0 of this Research Report conforms to the provisions of the 2020 ICC 700 Sections 601.7 and 11.601.7 (prefinished materials).

10.0 CODE COMPLIANCE RESEARCH REPORT USE

10.1 Approval of building products and/or materials can only be granted by a building official having legal authority in the specific jurisdiction where approval is sought.

10.2 Code Compliance Research Reports shall not be used in any manner that implies an endorsement of the product by Intertek.

10.3 Reference to the https://bpdirectory.intertek.com is recommended to ascertain the current version and status of this report.

This Code Compliance Research Report ("Report") is for the exclusive use of Intertek's Client and is provided pursuant to the agreement between Intertek and its Client. Intertek's responsibility and liability are limited to the terms and conditions of the agreement. Intertek assumes no liability to any party, other than to the Client in accordance with the agreement, for any loss, expense or damage occasioned by the use of this Report. Only the Client is authorized to permit copying or distribution of this Report and then only in its entirety, and the Client shall not use the Report in a misleading manner. Client further agrees and understands that reliance upon the Report is limited to the representations made therein. The Report is not an endorsement or recommendation for use of the subject and/or product described herein. This Report is not the Intertek Listing Report covering the subject product and utilized for Intertek Certification and this Report does not represent authorization for the use of any Intertek certification marks. Any use of the Intertek name or one of its marks for the sale or advertisement of the tested material, product or service must first be approved in writing by Intertek.

TABLE 1 – FOUNDRY PREMIUM VINYL SIDING
WIND RESISTANCE – MAXIMUM ALLOWABLE NEGATIVE DESIGN PRESSURE

Style	Exposure Width	Fasteners	Allowable Design Pressure [1] (psf)
Shakes 7'' Shake	7"	1-1/2" long, 1/8" dia. shank dia., 7/16'' dia. head, roofing nails spaced 8" on center, with every other nail penetrating through the sheathing and into the studs.	100
Shingles 7'' Shake	7"	1-1/2" long, 1/8" dia. shank dia., 7/16'' dia. head, roofing nails spaced 8" on center, with every other nail penetrating through the sheathing and into the studs.	120
Cedar Shingle 7'' Shake	7"	1-1/2" long, 1/8" dia. shank, 3/8'' dia. head, roofing nails spaced 10" on center, with every nail penetrating into the ½" sheathing.	108
Perfection Shingles 7'' Shake	7"	1-1/2" long, 1/8" dia. shank, 3/8'' dia. head, roofing nails spaced 10" on center, with every nail penetrating into the ½" sheathing.	108
7'' Staggered Shake	7"	1-1/2" long, 1/8" dia. shank, 3/8'' dia. head, roofing nails spaced 10" on center, with every nail penetrating into the ½" sheathing.	108
10'' Staggered Shake	10"	1-1/2" long, 1/8" dia. shank, 3/8'' dia. head, roofing nails spaced 16" on center, with every nail penetrating through the sheathing and into the studs.	75
Rounds Shapes	6"	1-1/2" long, 1/8" dia. shank dia., 7/16'' dia. head, roofing nails spaced 8" on center, with every other nail penetrating through the sheathing and into the studs.	108
Transition Starter Shapes	6"	1-1/2" long, 1/8" dia. shank dia., 7/16'' dia. head, roofing nails spaced 8" on center, with every other nail penetrating through the sheathing and into the studs.	108
Grayne Shingle	5"	1-1/2" long, 7/16" crown staples spaced 16" on center, penetrating through the nail hem and sheathing, and into the studs.	95
		1-1/2" long, 7/16" crown staples spaced 10" on center, penetrating through the nail hem and sheathing,	153
		1-1/2" long galvanized roofing nails spaced 16" on center, with every nail penetrating through the sheathing and into the studs	108
		1-1/2" long galvanized roofing nails spaced 10" on center penetrating through the sheathing	162
		1-1/2" long galvanized roofing nails spaced 8" on center, with every other nail penetrating through the sheathing and into the studs.	119
		1-1/2" long galvanized #8 pan head screws spaced 16" on center penetrating through the sheathing into the studs	108
		1-1/2" long galvanized #8 pan head screws spaced 10" on center penetrating through the sheathing	180

Style	Exposure Width	Fasteners	Allowable Design Pressure [1] (psf)
Grayne Shingle	7.5”	1-1/2” long, 7/16” crown staples spaced 16” on center, penetrating through the nail hem and sheathing, and into the studs.	113
		1-1/2” long, 7/16” crown staples spaced 10” on center, penetrating through the nail hem and sheathing.	128
		1-1/2” long galvanized roofing nails spaced 16” on center, with every nail penetrating through the sheathing and into the studs	88
		1-1/2” long galvanized roofing nails spaced 10” on center penetrating through the sheathing	69
		1-1/2” long galvanized #8 pan head screws spaced 16” on center penetrating through the sheathing into the studs	121
		1-1/2” long galvanized #8 pan head screws spaced 10” on center penetrating through the sheathing	180

(1) Allowable loads are applicable to wind design pressure derived from allowable stress design wind speed (V_{asd}) per IBC Section 1609.3.1

(2) Allowable Design Pressures are determined in accordance with Annex A1 of ASTM D3679, using a pressure equalization factor (PEF) of 0.50 and safety factor of 1.5.

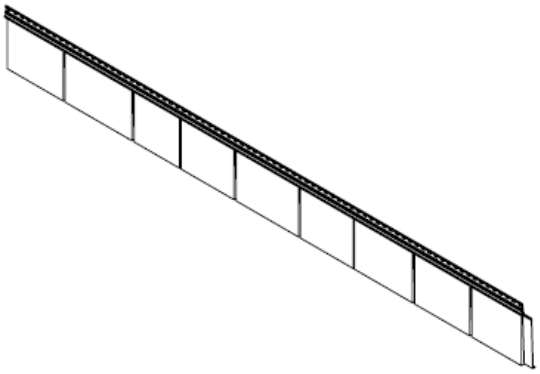

FIGURE 1 – GRAYNE SHINGLE PANEL

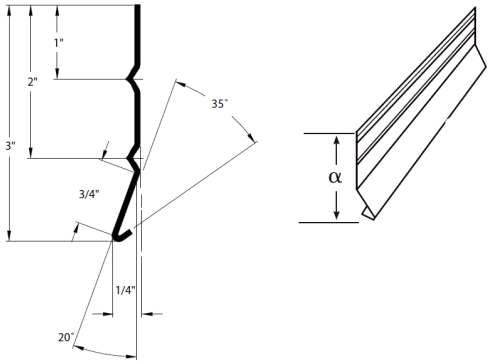

FIGURE 2 – STARTER STRIP

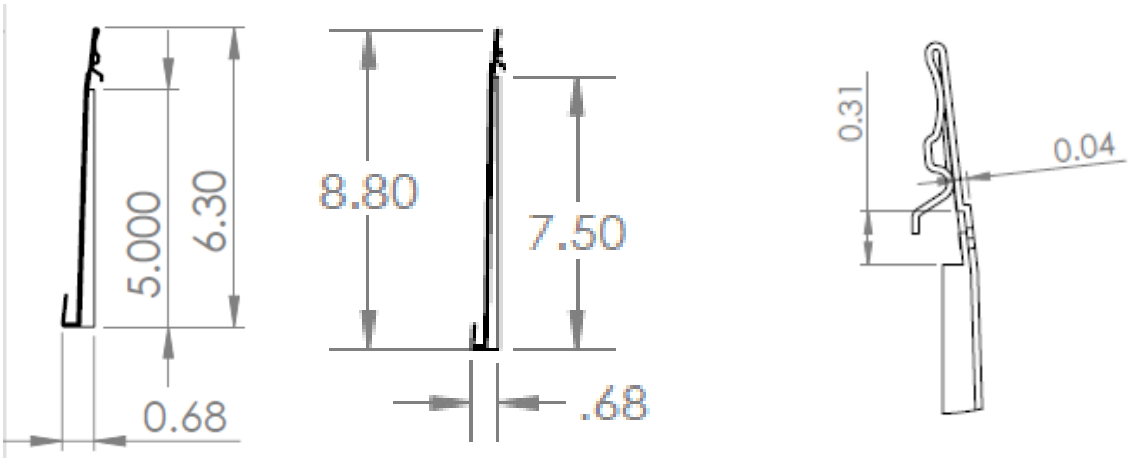

FIGURE 3 – GRAYNE SHINGLE PANEL CROSS SECTION AND CLIP DETAIL

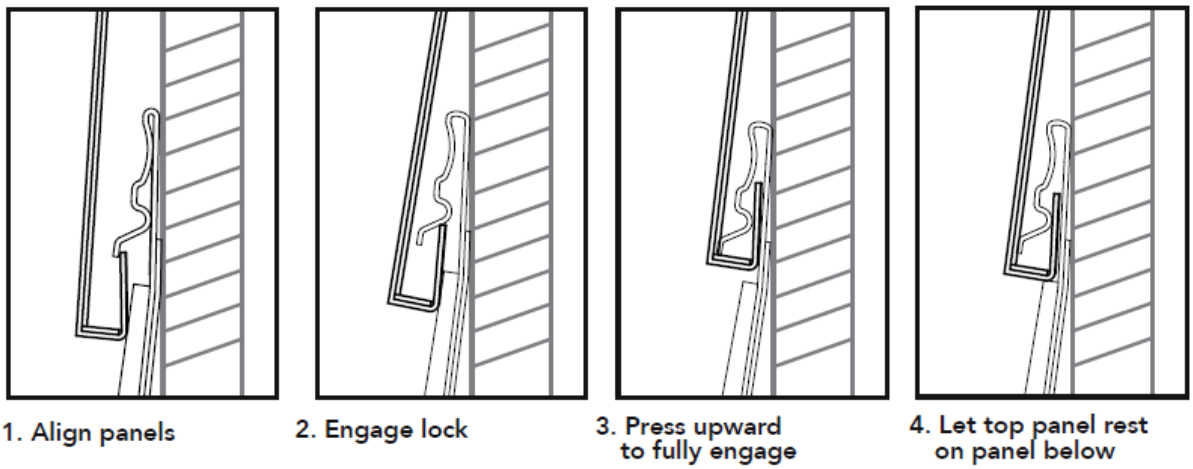

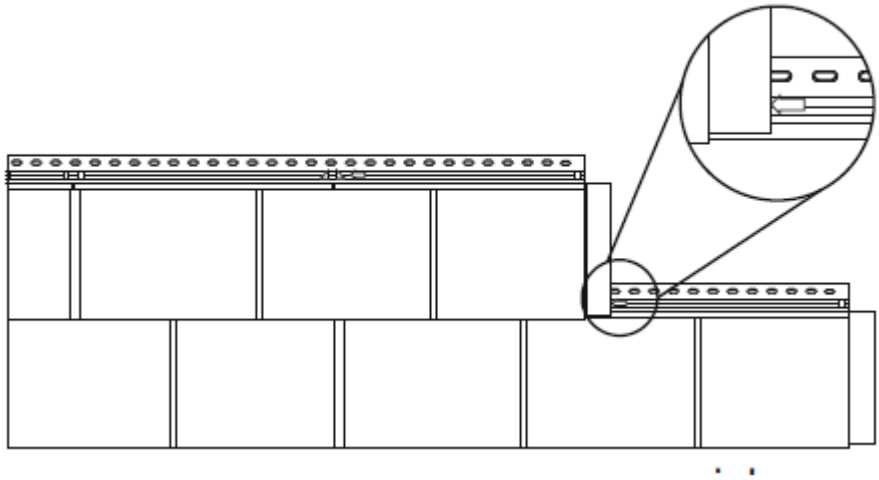

FIGURE 4 – GRAYNE SHINGLE TYPICAL INSTALLATION

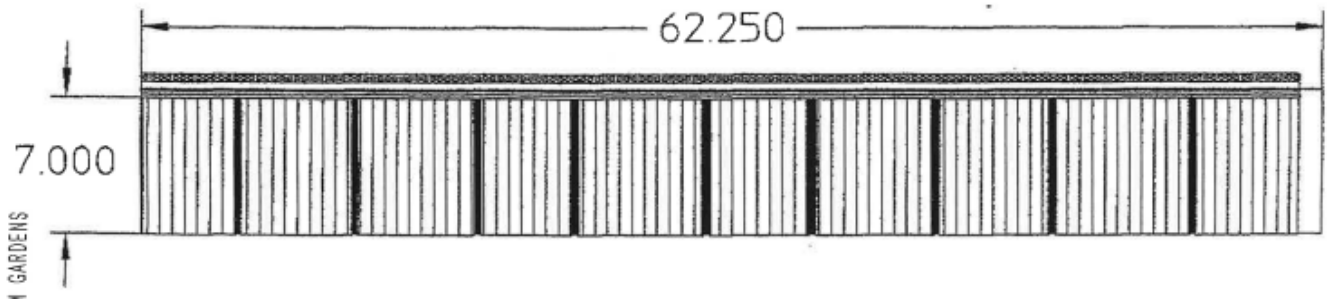

FIGURE 5 – Premium Foundry Vinyl Shakes 7'' Shake

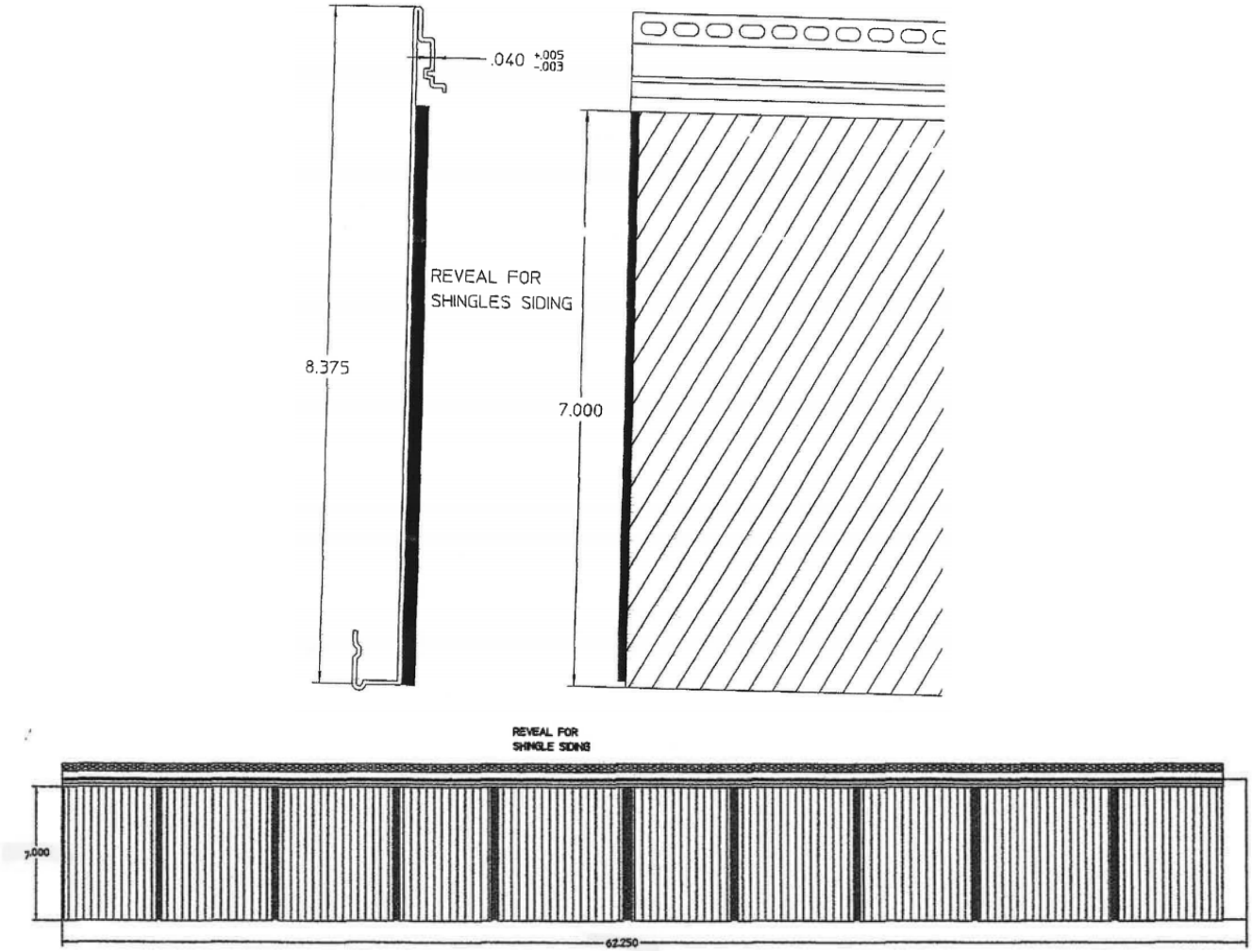

FIGURE 6 - Premium Foundry Vinyl Shingles 7'' Shake; Cedar Shingle 7'' Shake; Perfection Shingles 7'' Shake

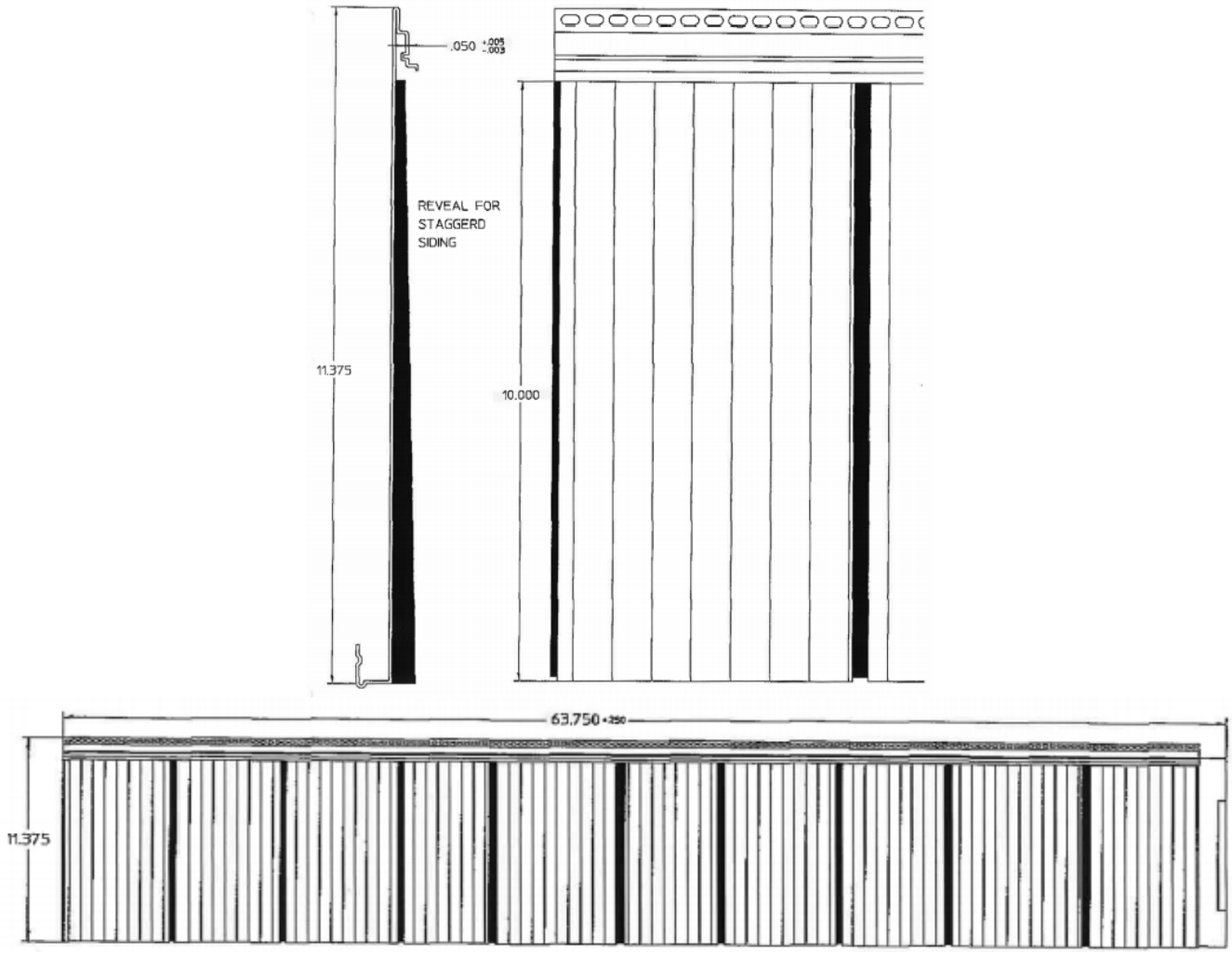

FIGURE 7 - Premium Foundry Vinyl 10'' Staggered Shake

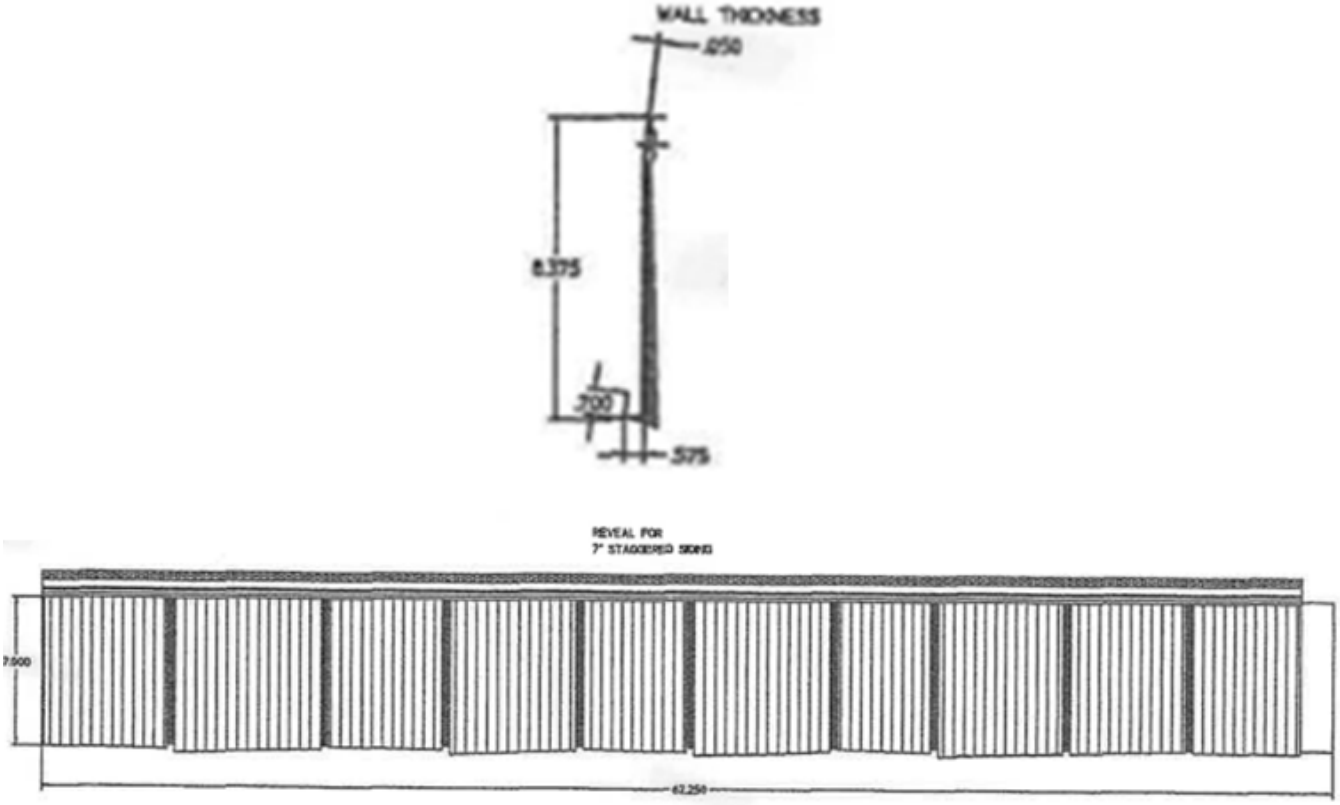

FIGURE 8 - Premium Foundry Vinyl 7'' Staggered Shake

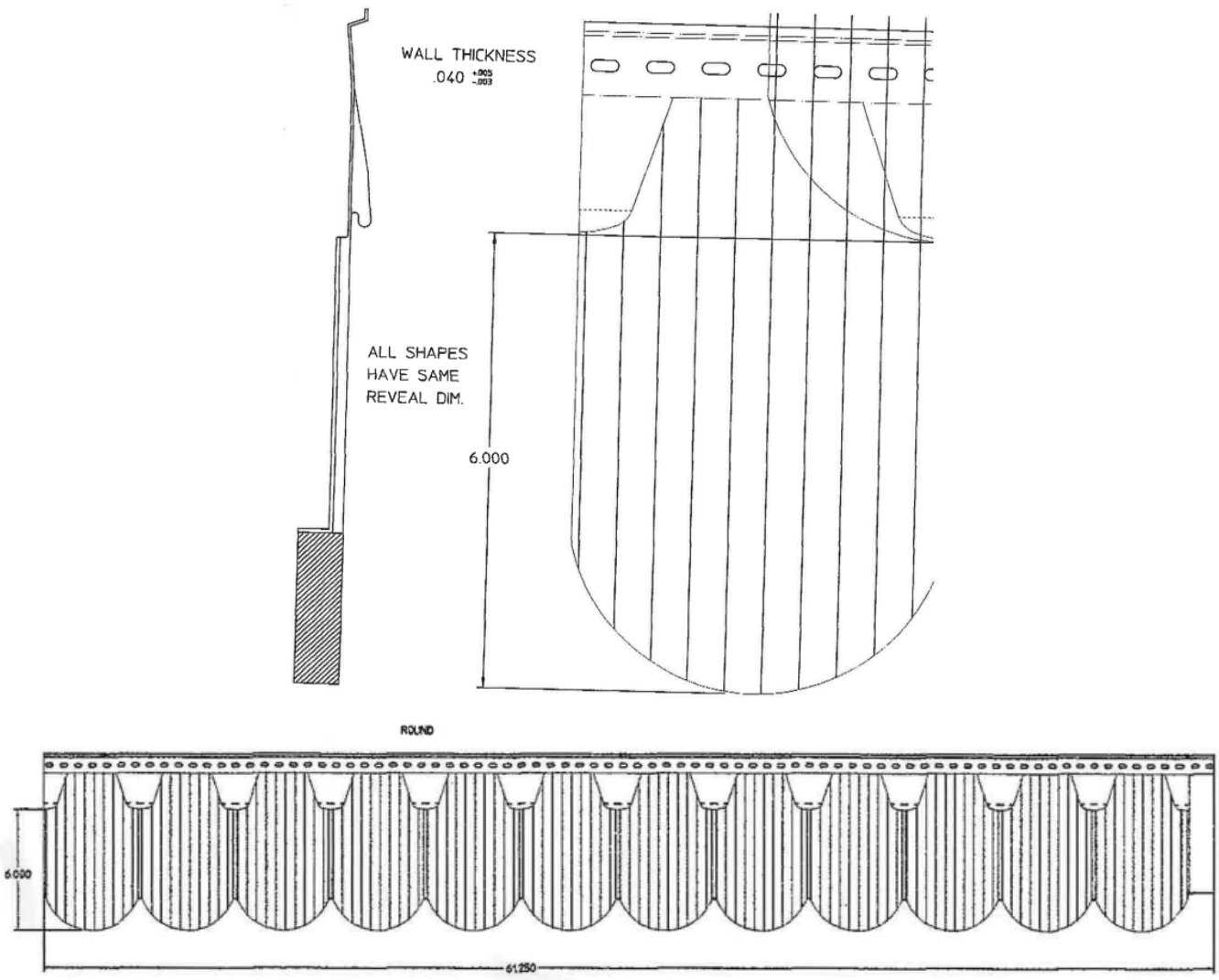

FIGURE 9 - Premium Foundry Vinyl Rounds Shapes

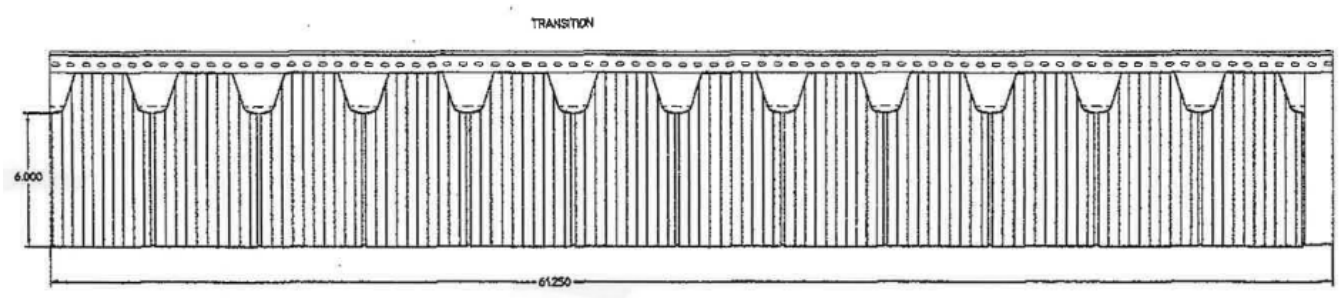

FIGURE 10 - Premium Foundry Vinyl Transition Starter Shapes