Code Compliance Research Report
CCRR-0474

Issue Date: 11-08-2022
Revision Date: 11-20-2023
Renewal Date: 11-30-2024

DIVISION: 07 00 00 – THERMAL AND MOISTURE PROTECTION
Section: 07 42 13 – Metal Wall Panels

REPORT HOLDER:
Carter Architectural Panels, Inc.
7925 East Ray Road., Suite 133
Mesa, Arizona 85212
480-899-3955
www.carterpanels.com

REPORT SUBJECT:
Exterior Cladding System:
etalbond® FR MCM Panels
EVO™ RIVETLESS™ Extrusion System
FUSION™ DRILLFREE™ Extrusion System

1.0 SCOPE OF EVALUATION

1.1 This Research Report addresses compliance with the following Codes:

- 2021, 2018 *International Building Code®* (IBC)
- 2023, 2020 *Florida Building Code* (FBC) including High Velocity Hurricane Zones (See Section 9)

NOTE: This report references the most recent edition of the Codes cited. Section numbers from earlier editions of the Code may differ.

1.2 The exterior cladding systems recognized in this report have been evaluated for the following properties:

- Structural
- Interior Finish Classification
- Durability

1.3 The exterior cladding systems recognized in this report have been evaluated for the following uses:

- Non-loadbearing exterior wall cladding in accordance with IBC Section 1406
- Use on exterior walls of all Types of construction (Types I, II, III, IV and V)
- Use in fire-resistance-rated construction

2.0 STATEMENT OF COMPLIANCE

The cladding systems described in this report comply with the Codes listed in Section 1.1, for the properties stated in Section 1.2, and uses stated in Section 1.3, when installed as described in this report, including the Conditions of Use stated in Section 6.0.

3.0 DESCRIPTION

3.1 FUSION™ DRILLFREE™ Extrusion System:

The FUSION™ DRILLFREE™ system consists of the following components: 6061-T6 Perimeter Extrusion, Starter, Integrated Stiffener Mid Clip and Half Clip attachment profiles.

3.2 EVO™ RIVETLESS™ Extrusion System:

The EVO™ RIVETLESS™ system consists of the following components: 6061-T6 Perimeter Extrusion, Starter, Integrated Stiffener Mid Clip and Half Clip attachment profiles.

3.3 etalbond® FR MCM Panels:

etalbond® FR MCM panels consist of two nominal 0.5mm (0.020 in.) thick aluminum skins, bonded to both surfaces of a mineral-filled polymer core. The panels are available in two overall panel thicknesses, 4mm (0.16 in.) and 6mm (0.24 in.). Both surfaces are covered with a proprietary coating.

The etalbond® FR panels are available in widths from 31 inches to 64 inches and in lengths from 6 feet to 24 feet.

The etalbond® FR panels are recognized in CCRR-0473.

3.4 Panel Fabrication:

3.4.1 FUSION™ DRILLFREE™ System: The perimeter of the etalbond® FR panels are routed and returned to form an L-shape having a height of 1 in. Each corner is mitered and

interlocked. Custom extruded FUSION™ perimeter rails are placed inside the single return track around the perimeter of the interior side of the panel. The rails are attached to the panels with proprietary nominal 3/16 in "double-bulb" aluminum rivets placed 1.75 in. from each edge and spaced 16 in. on center. The meeting points of the rails at each corner are reinforced with 2-1/2 in. x 2-1/2 in. x 0.080 in. vertical aluminum corner brackets, fastened with two Carter #8 x 3/4 in. self-drilling Torxlig screws.

3.4.2 EVO™ RIVETLESS System: The perimeter of the etalbond® FR panels are double routed and returned to form a C-shape having a height and return of 1 in. around the perimeter. Each corner is mitered and interlocked. Custom extruded EVO™ perimeter rails are placed inside the double returned perimeter track around the interior side of the panel. The meeting points of the rails at each corner are reinforced with 2-1/2 in. x 2-1/2 in. x 0.080 in. flat aluminum corner brace fastened with two Carter #8 x 3/4 in. self-drilling Torxlig screws.

3.4.3 Panel Stiffeners: Installation of the panels requires the use of Carter's patented 2 in. wide x 1-1/2 in. tall integrated extruded aluminum stiffeners installed at 16 in. on center on the interior of the panel, secured at the ends with 2-1/2 in. x 2-1/2 in. x 0.080 in. aluminum angle, fastened with two Carter #8 x 3/4 in. self-drilling Toraxlig screws to the panel perimeter. The stiffeners are secured by Carter's proprietary "Structural Stiffener Tape" and a secondary bead of structural silicone on each beveled edge of the stiffener.

4.0 PERFORMANCE CHARACTERISTICS

4.1 Physical Properties:

The exterior cladding system incorporating the etalbond® FR panels and the EVO™ RIVETLESS™ or FUSION™ DRILLFREE™ extrusion systems MCM Panel systems comply with IBC Section 1406 and ICC-ES AC25.

4.2 Surface Burning Characteristics:

The etalbond® FR panels have a flame spread index of not more than 25 and a smoke developed index of not more than 450, when tested in accordance with ASTM E84, and have a Class A interior finish classification.

4.3 Wind Resistance:

When installed in accordance with this report, the maximum allowable transverse loads are as follows:

EVO™ RIVETLESS™ Extrusion System:
- 39 psf negative, 40 psf positive

FUSION™ DRILLFREE™ Extrusion System:
- 41 psf negative, 43 psf positive

5.0 DESIGN AND INSTALLATION

5.1 General:

The exterior cladding systems described in this report must be installed in accordance with the manufacturer's published installation instructions, the applicable Code, and this Research Report. A copy of the manufacturer's instructions must be available on the jobsite during installation.

The cladding system must be installed over a base wall system covered with a water-resistive barrier complying with IBC Sections 1402 and 1403.2, except as noted in Sections 5.2.2 and 5.2.3 for use in Types I, II, III, and IV construction.

The panels must be fabricated by a fabricator acceptable to the building official. Fabrication must be in accordance with the approved building plans and with Section 3.4 of this report.

The maximum ACM panel span between horizontal attachments is 48 inches. Both EVO™ and FUSION™ panel installation starts at the bottom of the wall with Carter's patented 1-1/2 in. x 1/2 in. deep extruded aluminum retaining strip attached to the bottom galvanized channel, fastened with 1/4-14 screws spaced at 16 in. on center. The perimeter extrusion in the bottom panel is interlocked with the starter profile. The fabricated panels are attached to minimum No. 18 gage G-90 galvanized steel hat channel and Z-girts with clips spaced a maximum of 16 inches on center on vertical edges and 24 inches on center on the top edge. The EVO™ and FUSION™ clips must be attached with one #14-14 x 7/8 in. corrosion-resistant screw. Design of the hat channel and Z-girts and their attachment to the base wall construction must be provided, to the satisfaction of the building official, for each project.

See Figures 1 through 6 for typical installation details.

5.2 Exterior Walls of Buildings of Type I, II, III, or IV Construction:

5.2.1 General: etalbond® FR panels installed with the FUSION™ DRILLFREE™ Extrusion System may be used on exterior walls in Type I, II, III, or IV construction as described in Section 5.2.2.

The etalbond® FR panels installed with either the FUSION™ DRILLFREE™ Extrusion System or EVO™ RIVETLESS™ Extrusion System may be installed on buildings a maximum height of 40 feet above the grade plane, under the limitations specified in IBC Section 1406.10.1 and 1406.10.2. Alternatively, for buildings exceeding 40 feet above the grade plane, data demonstrating compliance with IBC Section 1406.10.1, 1406.102 and 1406.10.3 shall be submitted to the local building official.

5.2.2 FUSION™ DRILLFREE™ System:

The FUSION™ DRILLFREE™ System may be used on buildings of Types I, II, III, or IV construction for installations greater than 40 feet above grade plane when installed as described in this section.

Interior Sheathing: Minimum 5/8 in. USG/Tremco SECUROCK® EXOAIR® 430 Air & Water Barrier, installed horizontally and attached to framing with #14 x 1-1/4 in. self-tapping bugle-head screws spaced at 8 in. on center on the perimeter and 12 in. on center in the field of the panels. Joints and screw heads must be covered with Tremco Dymonic® 100 High Performance Polyurethane Sealant.

Framing: Minimum 3-5/8 in. x 1-1/4 in., 20 gage steel studs and tracks. No insulation is used in the stud cavities. Floorlines must be protected with minimum 4 pcf mineral wool insulation between the floor and the exterior cladding.

Exterior Sheathing: Minimum 5/8 in. Type X gypsum sheathing, installed horizontally and attached to framing with #14 x 1-1/4 in. self-tapping bugle-head screws spaced at 8 in. on center on the perimeter and 12 in. on center in the field of the panels. All joints and screw heads must receive a Level 2 finish.

Exterior Insulation: Johns Manville 2 in. JM CladStone® Water and Fire Block insulation is attached to the wall with Ultrafast® Phillips 5 in. roofing fasteners and Ultrafast® CI Plates.

Openings: Openings must be framed with 20 gage steel framing, must be finished with Tremco Exoair 110AT tape, followed by Tremco Spectrem®1 Moisture-Cure Silicone Sealant used to secure Tremco 40 in. one-sided single-ribbed Proglaze ETA on the header and uprights of the opening. The header must be covered with 26 gage flashing followed by 18 gage aluminum flashing flush with the exterior edge and with a 2 in. leg on the interior side of the opening. TENMAT FIREFLY 102 is applied around the window opening.

Exterior Cladding: Minimum 4mm etalbond® FR panels are installed as described in this report using the FUSION™ DRILLFREE™ attachment system. The water-resistive barrier required by IBC Section 1402.5 is provided by the EXOAIR 430 system when installed in accordance with ICC-ES ESR-4423.

5.2.3 EVO™ RIVETLESS™ System:

The EVO™ RIVETLESS™ System may be used on buildings of Types I, II, III, or IV construction for installations greater than 40 feet above grade plane when installed as described in this section.

Interior Sheathing: Minimum 5/8 in. Type X gypsum sheathing complying with ASTM C1396, installed vertically and attached to framing with #6 x 1-1/4 in. self-drilling bugle-head screws spaced at 8 in. on center on the perimeter and 12 in. on center in the field of the panels. Joints and screw heads must be covered with joint compound.

Framing: Minimum 3-5/8 in. x 1-1/4 in., 18 gage steel studs and tracks. No insulation is used in the stud cavities. Floorlines must be protected with minimum 4 pcf mineral wool insulation between the floor and the exterior cladding.

Exterior Sheathing: Minimum 5/8 in. Type X gypsum sheathing complying with ASTM C1177, installed horizontally and attached to framing with #6 x 1-1/4 in. self-drilling bugle-head screws spaced at 8 in. on center on the perimeter and 12 in. on center in the field of the panels.

Exterior Insulation: Johns Manville 3-1/2 in. JM AP™ Foil Faced Polyisocyanurate Continuous Insulation Sheathing (see CCRR-0444) is cut to fit between the horizontal Z-bars and is attached to the wall with 5 in. JM Ultrafast® Fasteners and 2 in. JM Ultrafast Plates, installed 24 in. below the Z-bars

spaced at 24 in. in the field of the foam. 4 in. wide 3M All Weather Flashing Tape 8067 is applied over the horizontal and vertical sheathing joints. 4 in. squares of the tape must be applied over the JM Ultrafast® CI Plates.

Openings: Openings must be framed with minimum 20 gage galvanized steel framing. 16 gage, 3-1/2 in. deep continuous "U" bar must be installed over the exterior sheathing around the window opening perimeter. 26 gage window flashing is installed on the window header and jambs, extending from the interior edge of the framing to even with the exterior surface of the panels. On the sill, 26 gage flashing must extend from the interior edge of the framing over the exterior cladding by 2 in. The window flashing is fastened to the continuous "U" bar around the window perimeter with # 10 hex-head fasteners spaced 8 in. on center.

Exterior Cladding: Minimum 4mm etalbond® FR panels are installed as described in this report using the EVO™ RIVETLESS™ system. The water-resistive barrier required by IBC Section 1402.5 is provided by the AP Foil insulation boards when taped with 4 in. wide 3M All Weather Flashing Tape 8067 and installed as described in CCRR-0444.

5.3 Fire-resistance-rated Construction:

Use in fire-resistance-rated construction is outside the scope of this report.

5.4 Interior Wall Covering:

The panels may be used as an interior wall finish in compliance with IBC Chapter 8. The panels must be installed on the interior side of the wall in accordance with Section 5.1 above. The panels have a Class A interior finish classification.

6.0 CONDITIONS OF USE

6.1 Installation must comply with this Research Report, the manufacturer's published installation instructions, and the applicable Code. In the event of a conflict between the manufacturer's instructions and this report, this report governs.

6.2 The design of the structural support system (building framing, panel mounting hardware, attachment accessories, and silicone adhesive) and panels' connections to their supporting mounting bars, provided by the MCM system's fabricator, must be submitted to and approved by the Code official for each project.

6.3 The allowable transverse load capacity for the MCM panels and their interlock with their attachment accessories must be submitted to and approved by the Code official for each project. The allowable transverse load capacity must equal or exceed the design loads determined in accordance with Chapter 16 of the IBC. Allowable transverse loads for the MCM materials are set forth in Section 4.2 of this report.

6.4 The MCM system's fabricator must provide a certificate of compliance to the Code official attesting that the MCM system fabrication includes the use of adhesive approved for use, that the adhesive application complies with the adhesive manufacturer's installation guidelines, and that the MCM system fabrication complies with approved construction documents. Additionally, the use of adhesives for the installation of stiffeners to the back of the panels requires special inspections in accordance with IBC Section 1704.2, or the fabricator must be approved by the Code official in accordance with IBC Section 1704.2.5.

6.5 Where the panels are installed on exterior walls on buildings of Type I, II, III, and IV construction, the walls must be constructed in accordance with Section 5.2 of this report.

6.6 Evidence of weather tightness of the wall cladding system in accordance with IBC Section 1406.6 must be submitted to the Code official.

6.7 The extrusions are manufactured in Ontario, Canada, under a quality control program with inspections by Intertek Testing Services NA Inc.

7.0 SUPPORTING EVIDENCE

7.1 Data in accordance with ICC-ES Acceptance Criteria for Metal Composite Material (AC25), dated October 2010 (editorially revised November 2015).

7.2 Reports of tests in accordance with NFPA 285, TAS 201, TAS 202, and TAS 203.

7.3 Intertek Listing Report titled *"Carter Architectural Panels - EVO™ RIVETLESS™ and FUSION™ DRILLFREE™ ACM Mounting Systems."*

8.0 IDENTIFICATION

The EVO™ RIVETLESS™ and FUSION™ DRILLFREE™ system components are labeled on packaging with the company name (Carter Architectural Panels, Inc.), the product name, the Intertek Mark as shown below, the Intertek Control Number and the Code Compliance Research Report number, CCRR-0474.

The etalbond® FR panels are labeled as described in CCRR-0473.

9.0 OTHER CODES

9.1 Florida Building Code:

When installed in accordance with Sections 2 through 7 of this report, the etalbond® FR panels used in conjunction with the FUSION™ DRILLFREE™ and EVO™ RIVETLESS™ systems comply with the 2023 and 2020 *Florida Building Code - Building,* including High-velocity Hurricane Zones, subject to the following conditions:

- The systems have been evaluated for maximum design pressures of 100 psf positive and 75 psf negative, in accordance with FBC Section 1626.
- The systems may be used on the exterior walls of any and all structures, except buildings classified as Risk Category IV – Essential Facility Buildings or Structures, on which the systems may not be installed below 30 feet, in accordance with FBC Section 1626.2.
- The systems must be installed over minimum 18 gage steel framing spaced 16 inches on center and minimum 5/8 in. gypsum sheathing.
- When used within the HVHZ, the FUSION™ DRILLFREE™ system must be installed as described in Sections 3, 4, and 5 of this report.
- When used within the HVHZ, the EVO™ RIVETLESS™ system installation requires the following, in addition to the construction detailed in Sections 3, 4, and 5 of this report:

  etalbond® FR panels must be backed by 0.038 in. thick sheet of G-90 galvanized steel, adhered to the interior of the panel using Carter's proprietary Structural Stiffener Tape. In addition to the horizontal hat channels at 16 in. on center, No. 18 gage G-90 galvanized J-bar must be attached to framing at the exterior panel edge. On vertical edges, two of the panel clips must penetrate through the J-bar and into the hat channel. Clips attaching the panels must be attached to the supporting structure a maximum of 13.5 in. on vertical edges and 16 in. on center on the top edge.

Intertek is an approved evaluation entity and quality assurance entity pursuant to Florida Statute 553.842 – *Product Evaluation and Approval*.

10.0 CODE COMPLIANCE RESEARCH REPORT USE

10.1 Approval of building products and/or materials can only be granted by a building official having legal authority in the specific jurisdiction where approval is sought.

10.2 Code Compliance Research Reports shall not be used in any manner that implies an endorsement of the product by Intertek.

10.3 Reference to the https://bpdirectory.intertek.com is recommended to ascertain the current version and status of this report.

This Code Compliance Research Report ("Report") is for the exclusive use of Intertek's Client and is provided pursuant to the agreement between Intertek and its Client. Intertek's responsibility and liability are limited to the terms and conditions of the agreement. Intertek assumes no liability to any party, other than to the Client in accordance with the agreement, for any loss, expense or damage occasioned by the use of this Report. Only the Client is authorized to permit copying or distribution of this Report and then only in its entirety, and the Client shall not use the Report in a misleading manner. Client further agrees and understands that reliance upon the Report is limited to the representations made therein. The Report is not an endorsement or recommendation for use of the subject and/or product described herein. This Report is not the Intertek Listing Report covering the subject product and utilized for Intertek Certification and this Report does not represent authorization for the use of any Intertek certification marks. Any use of the Intertek name or one of its marks for the sale or advertisement of the tested material, product or service must first be approved in writing by Intertek.

TABLE 1 - PROPERTIES EVALUATED

PROPERTY	2021 IBC SECTION	2023 FBC SECTION
Physical Properties	1406	1407
Surface Burning Characteristics	803	803
Use in Types I, II, III, and IV Construction	1406.10	1407.10
Fire-resistance Rated Construction	1406.8	1407.8
High-velocity Hurricane Zones	NA	1626

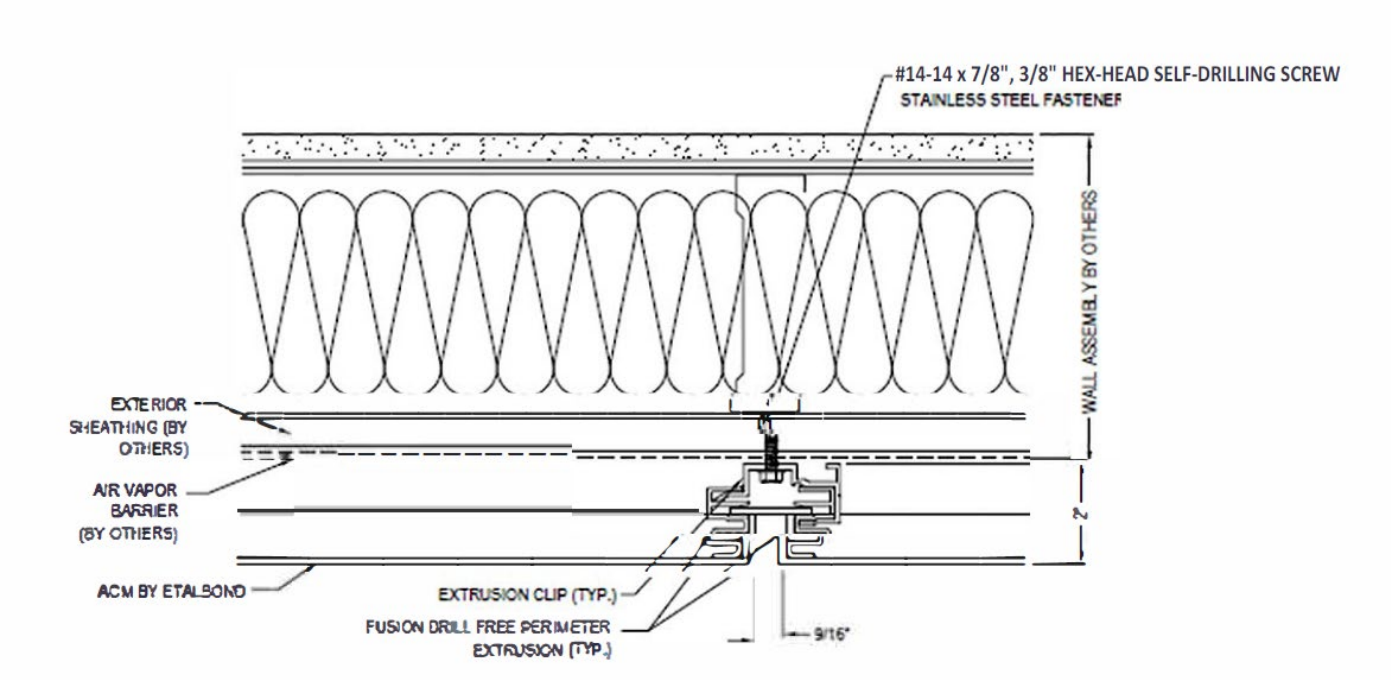

Figure 1 - FUSION™ DRILLFREE™ System - Typical Vertical Joint
(See Section 5 for component requirements)

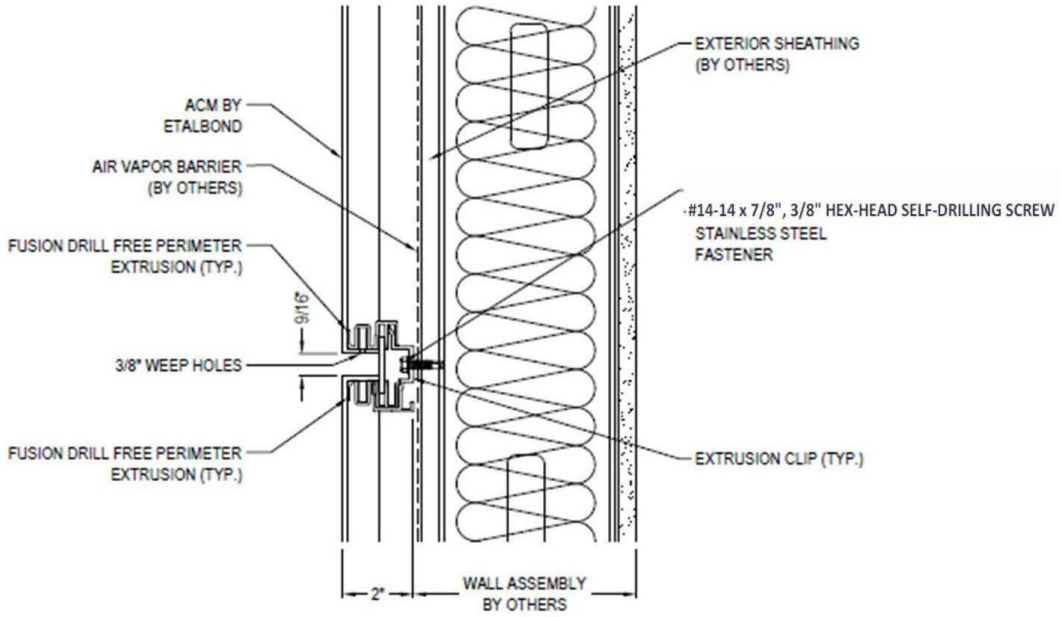

Figure 2 - FUSION™ DRILLFREE™ System - Typical Horizontal Joint
(See Section 5 for component requirements)

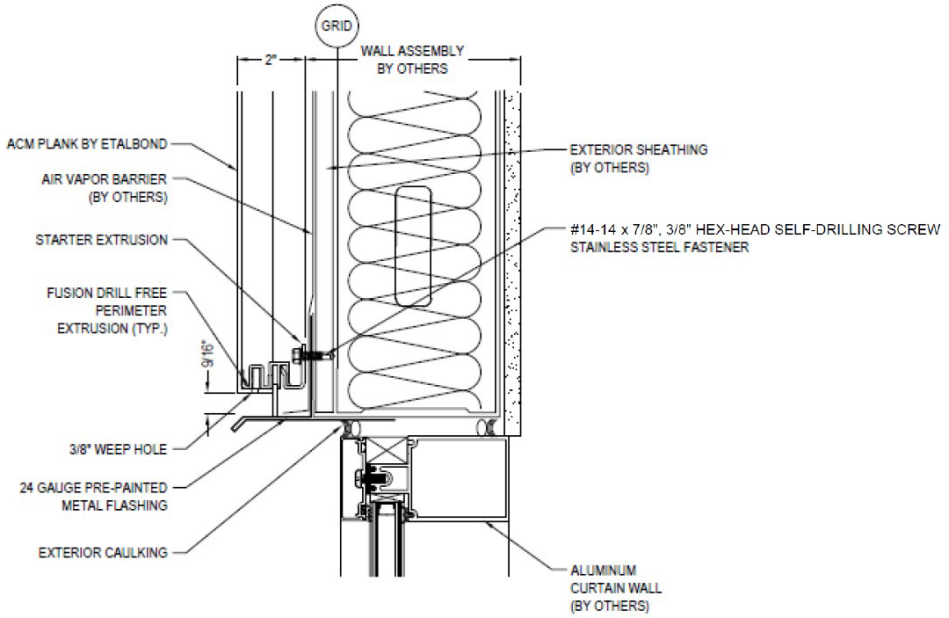

Figure 3 - FUSION™ DRILLFREE™ System - Typical Head Detail
(See Section 5 for component requirements)

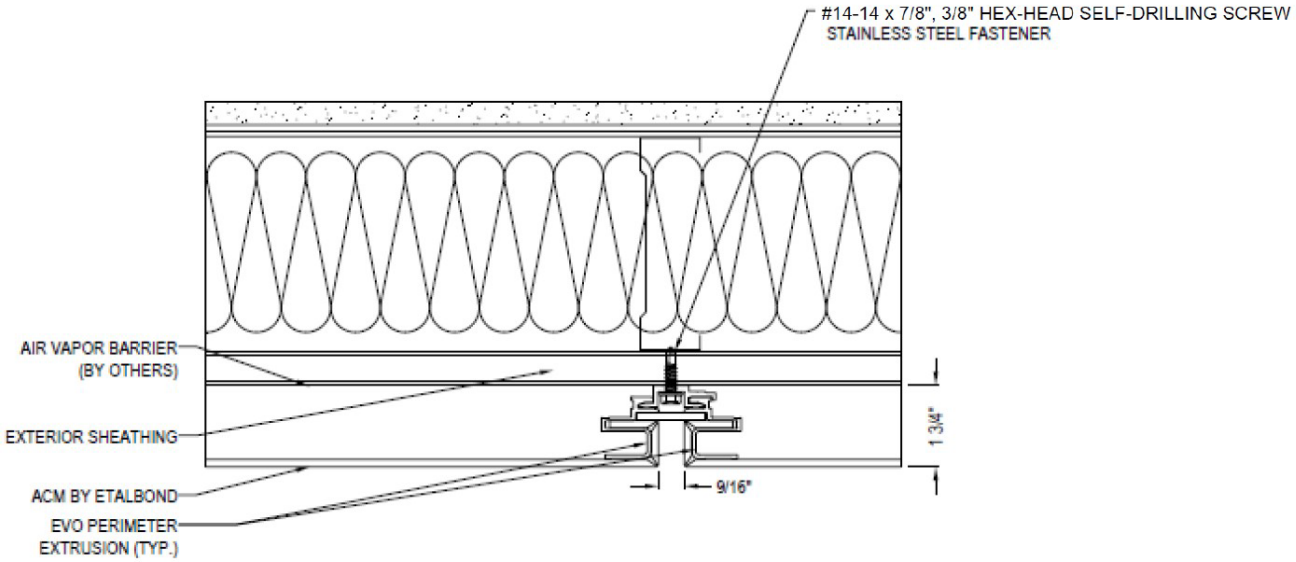

Figure 4 - EVO™ RIVETLESS™ System - Typical Vertical Joint
(See Section 5 for component requirements)

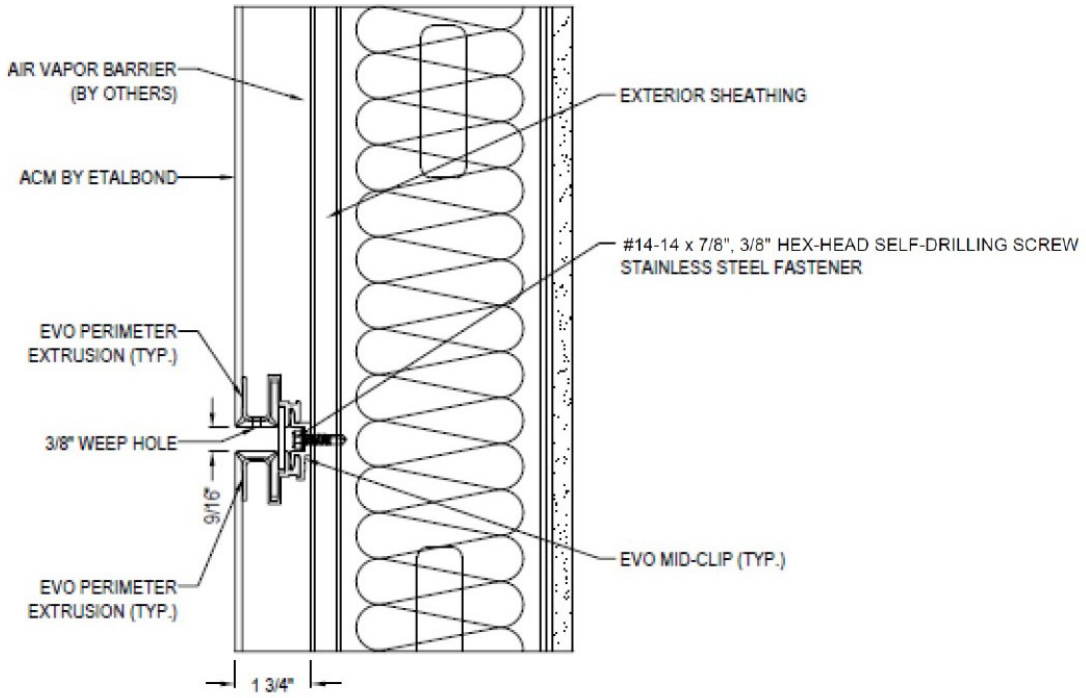

Figure 5 - EVO™ RIVETLESS™ System - Typical Horizontal Joint
(See Section 5 for component requirements)

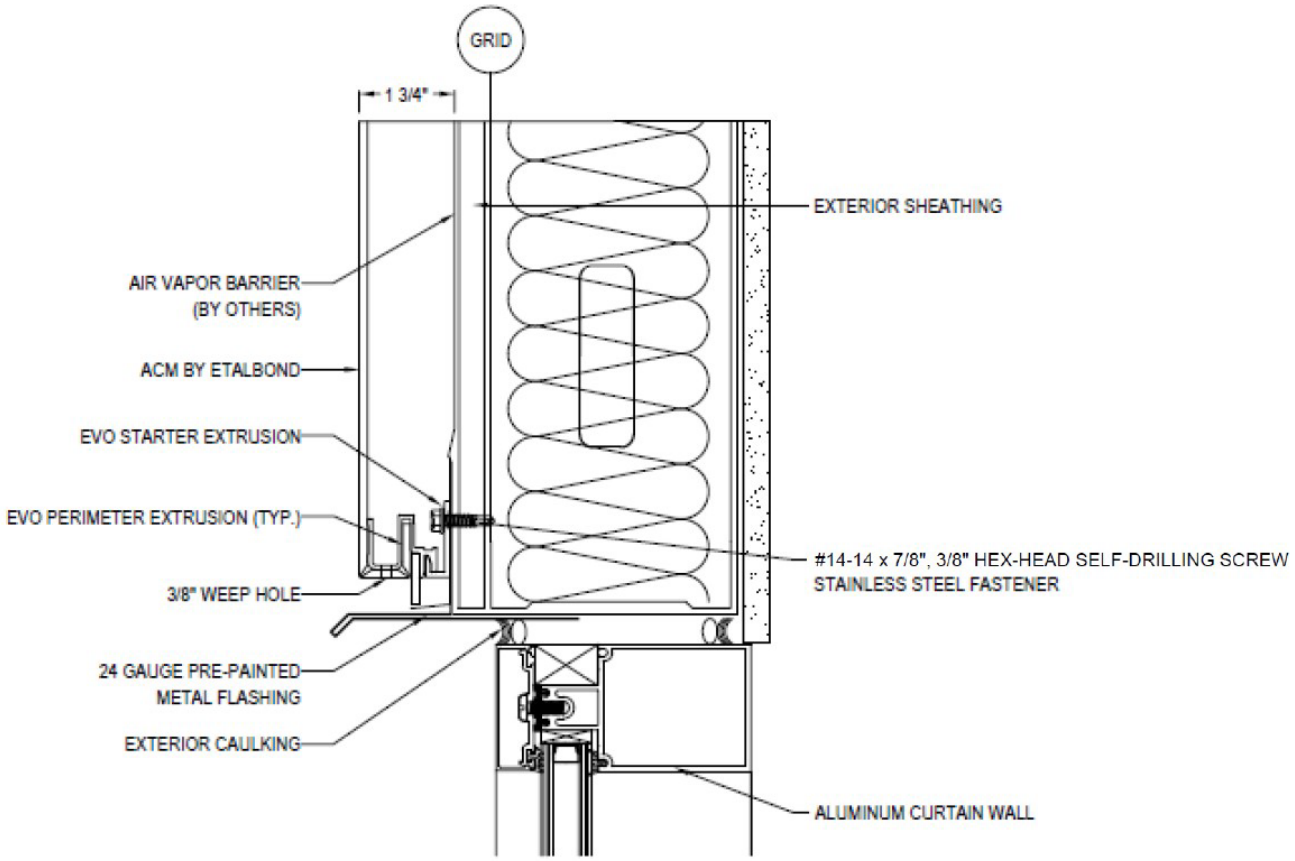

Figure 6 - EVO™ RIVETLESS™ System - Typical Head Detail
(See Section 5 for component requirements)