**EVALUATION REPORT OF**
**ALLIANCE STEEL INC.'S**
**'PBM PANEL'**

**FLORIDA BUILDING CODE 9TH EDITION (2026)**
**FLORIDA PRODUCT APPROVAL**
**FL 41985.3-R2**
**PANEL WALLS**
**SIDING**

**Prepared For:**
**Alliance Steel, Inc.**
**3333 South Council Road**
**Oklahoma City, OK 73179-4410**
**Telephone: (405) 745 7500**

**Prepared By:**
**Bala Sockalingam, Ph.D., P.E.**
**Florida Professional Engineer #62240**
**1216 N Lansing Ave., Suite C**
**Tulsa, OK 74106**
**Telephone: (918) 492-5992**

**This report consists of**
**Evaluation Report (3 Pages including cover)**
**Installation Details (1 Page)**
**Load Span Table (1 Page)**

**Report No. C3088-3**
**Date: 10.15.2026**

BALA SOCKALINGAM
LICENSE
No. 62240
STATE OF
FLORIDA
PROFESSIONAL ENGINEER

This item has been digitally signed and sealed by Bala Sockalingam, PE, on the date indicated.

Printed copies of this document are not considered signed and sealed and this signature must be verified on any electronic copies.

2026.10.15
16:00:57
-04'00'

| | |
|---|---|
| Manufacturer: | Alliance Steel Inc. |
| Product Name: | PBM Panel |
| Panel Description: | 36" wide coverage with (7) 3/4" high ribs at 6" o.c |
| Materials: | Min. 26 ga., 80 ksi steel or min. 24 ga., 50 ksi steel. Galvanized coated steel (ASTM A653) or Galvalume coated steel (ASTM A792) or painted steel (ASTM A755) as per FBC 2026 Section 1405.2. |
| Support Description: | Min. 16 ga., min 50 ksi steel section. (Must be designed by others) |
| Design Outward Pressures:<br>(Factor of Safety = 2) | -52.5 psf at support spacing of 60 o.c.<br>-118.9 psf at support spacing of 24 o.c. |
| Panel Fastening: | #12-14 x 1-1/4" long corrosion resistant self-drilling screws with washer. |
| At interior supports | at 12" o.c. across panel width |
| At panel ends | at 6" o.c. across panel width |
| Sidelap Fastening: | ¼"-14 x 7/8" long corrosion resistant self-drilling screws with washer at 24" o.c.<br><br>For installation in areas within 3000 ft. of a saltwater coastline, panel and sidelap fasteners are corrosion resistant as per FBC 2026 Section 1711. |
| Test Standard: | Wall assembly tested in accordance with ASTM E1592-05(2012) 'Test Method for Structural Performance of Sheet Metal Roof and Siding Systems by Uniform Static Air Pressure Difference' |
| Test Equivalency: | The test procedures in E1592-05(2012) comply with test procedures prescribed in ASTM E1592-05(2017). |
| Code Compliance: | The product described herein has demonstrated compliance with FBC 2026 Section 1404.5. |
| Product Limitations: | Design wind loads shall be determined for each project in accordance with FBC 2026 Section 1609 or ASCE 7-22 using allowable stress design. The design pressure for reduced support spacing may be computed using rational analysis prepared by a Florida Professional Engineer or based on Alliance Steel's load span table. This evaluation report is not applicable in High Velocity Hurricane Zone. |

Supporting Documents: ASTM E1592 Test Report
ENCON Technology Inc.
C2095-1, Reporting Date 7/27/2016

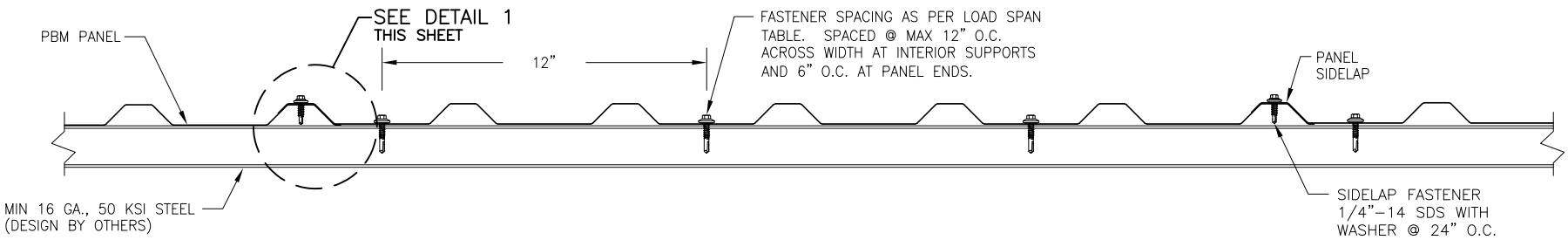


## TYPICAL PANEL INSTALLATION X–SECTION

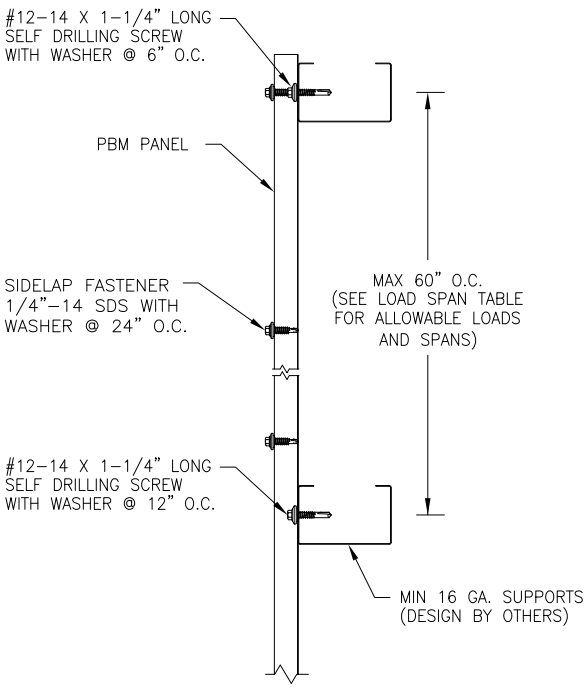


## SECTION VIEW

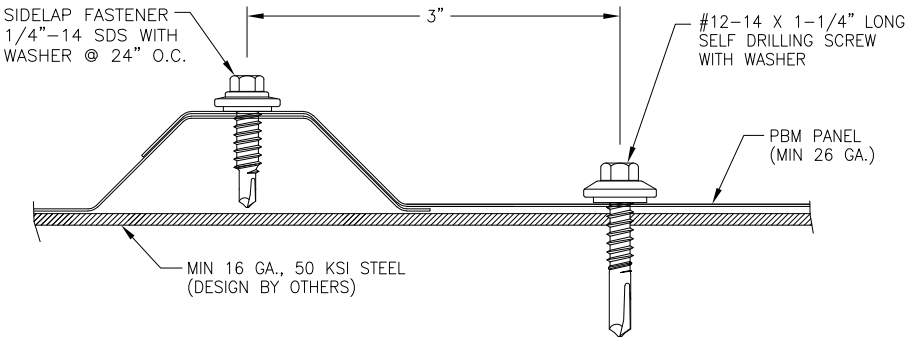


## DETAIL 1

**GENERAL NOTES:**

1. STRUCTURAL WALL PANEL HAS BEEN DESIGNED IN ACCORDANCE WITH THE FLORIDA BUILDING CODE (FBC).
2. WALL PANELS SHALL BE MIN 26 GA. (t = 0.018"). EFFECTIVE COVERING WIDTH OF PANEL = 36".
3. THE WALL PANELS SHALL BE INSTALLED OVER STRUCTURE AS SPECIFIED ON THIS DRAWING.
4. REQUIRED DESIGN WIND LOADS SHALL BE DETERMINED FOR EACH PROJECT. THIS PANEL SYSTEM MAY NOT BE INSTALLED WHEN THE REQUIRED DESIGN WIND LOADS ARE GREATER THAN THE ALLOWABLE DESIGN LOADS.
5. ALL FASTENERS MUST BE IN ACCORDANCE WITH THIS DRAWING & THE FLORIDA BUILDING CODE. IF A DIFFERENCE OCCURS BETWEEN THE MINIMUM REQUIREMENTS OF THIS DRAWING & THE CODE, THE CODE SHALL CONTROL.
6. SUPPORTS MUST BE DESIGNED TO WITHSTAND WIND LOADS AS REQUIRED FOR EACH APPLICATION AND ARE THE RESPONSIBILITY OF OTHERS.

| DRAWN BY: B.S. | CHECKED BY: K.S. |
|---|---|
| PLOT: | DATE: 8/24/2023 |

| NO. | REVISION DESCRIPTION | BY | DATE |
|---|---|---|---|
| | | | |

DRAWING TITLE: PBM WALL PANEL

MANUFACTURER: ALLIANCE STEEL INC.
3333 SOUTH COUNCIL ROAD
OKLAHOMA CITY, OK 73179–4410
405 745 7500

CONSULTANTS
BALA SOCKALINGAM, PH.D., P.E.
1216 N LANSING AVE, SUITE C
TULSA, OK 74106
PHONE: 918–492–5992

DRAWING NO. 3088–3 REV.

PAGE NO. 1 OF 1

**ALLIANCE STEEL INC.**
**PBM Panel**
**Allowable Outward Loads**

| Support Spacing (in) | Allowable Outward Loads (psf) |
|---|---|
| 24 | **-118.9** |
| 27 | -113.4 |
| 30 | -105.0 |
| 33 | -95.5 |
| 36 | -87.5 |
| 39 | -80.8 |
| 42 | -75.0 |
| 45 | -70.0 |
| 48 | -65.6 |
| 51 | -61.8 |
| 54 | -58.3 |
| 57 | -55.3 |
| 60 | **-52.5** |

**Notes:**

1. The bold numbers indicate allowable loads calculated from test data with safety factor of 2.
2. Fasteners at 12" o.c. across the panel width at interior supports and at 6" o.c. across the panel width at end supports.
3. Allowable load is applicable to two or more spans conditions.
4. Panels must be installed as per Evaluation Report FL 41985.3 and Alliance Steel current installation procedure.
5. The structural capacity of supports are not considered and must be examined independently.
6. Minimum support thickness is 16 ga.

1216 N Lansing Ave., Suite C
Tulsa, Ok 74106
918 492 5992

Bala Sockalingam, Ph.D., P.E.
FL 62240