EVALUATION REPORT OF
ALLIANCE STEEL INC.'S
'PBA PANEL'

FLORIDA BUILDING CODE 9TH EDITION (2026)
FLORIDA PRODUCT APPROVAL
FL 41985.2-R2
PANEL WALLS
SIDING

Prepared For:
Alliance Steel, Inc.
3333 South Council Road
Oklahoma City, OK 73179-4410
Telephone: (405) 745 7500

Prepared By:
Bala Sockalingam, Ph.D., P.E.
Florida Professional Engineer #62240
1216 N Lansing Ave., Suite C
Tulsa, OK 74106
Telephone: (918) 492-5992

This report consists of
Evaluation Report (2 Pages including cover)
Installation Details (1 Page)
Load Span Table (1 Page)

Report No. C3088-2
Date: 10.15.2026

BALA SOCKALINGAM
LICENSE
No. 62240
STATE OF
FLORIDA
PROFESSIONAL ENGINEER

This item has been digitally signed and sealed by Bala Sockalingam, PE, on the date indicated.

Printed copies of this document are not considered signed and sealed and this signature must be verified on any electronic copies.

2026.10.15
16:00:34
-04'00'

Manufacturer:	Alliance Steel Inc.
Product Name:	PBA Panel
Panel Description:	36" wide coverage with (4) 1.25" deep inverted ribs at 12" o.c.
Materials:	Min. 26 ga., 80 ksi steel or min. 24 ga., 50 ksi steel. Galvanized coated steel (ASTM A653) or Galvalume coated steel (ASTM A792) or painted steel (ASTM A755) as per FBC 2026 Section 1405.2.
Support Description:	Min. 16 ga., min 50 ksi steel section. (Must be designed by others)
Design Pressures:	The allowable uniform loads shown on the load span table were determined in accordance with FBC 2026 Section 1404.5 and 2210.1 and AISI S100-16(2020) w/S2-20. Secondary supports, frames and support connections must be designed to resist all loads.
Panel Fastening:	#12-14 x 1-1/4" long corrosion resistant self-drilling screws with washer at 12" o.c. across panel width at all supports.
Sidelap Fastening:	¼"-14 x 7/8" long corrosion resistant self-drilling screws with washer at 24" o.c. For installation in areas within 3000 ft. of a saltwater coastline, panel and sidelap fasteners are corrosion resistant as per FBC 2026 Section 1711.
Code Compliance:	The product described herein has demonstrated compliance with FBC 2026 Section 1404.5.
Product Limitations:	Design wind loads shall be determined for each project in accordance with FBC 2026 Section 1609 or ASCE 7-22 using allowable stress design. The design pressure for reduced support spacing may be computed using rational analysis prepared by a Florida Professional Engineer or based on Alliance Steel's load span table. This evaluation report is not applicable in High Velocity Hurricane Zone.

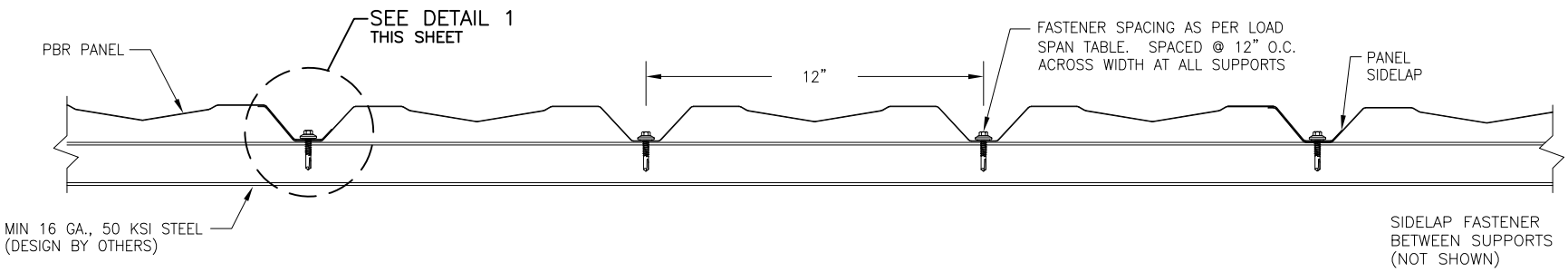

TYPICAL PANEL INSTALLATION X-SECTION

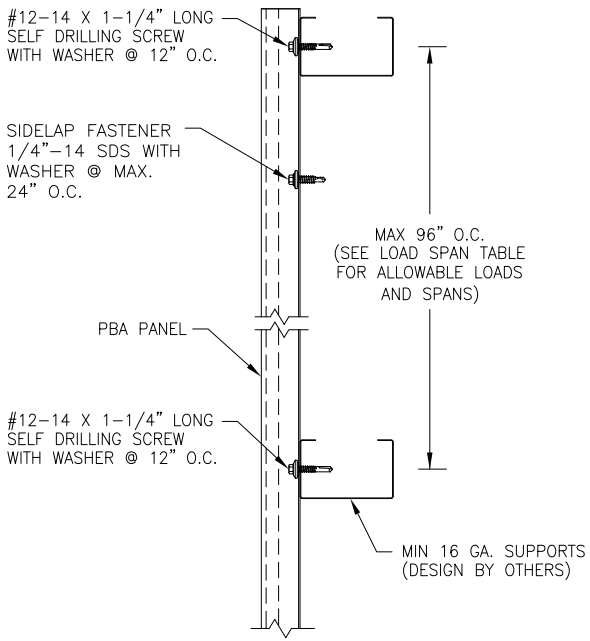

SECTION VIEW

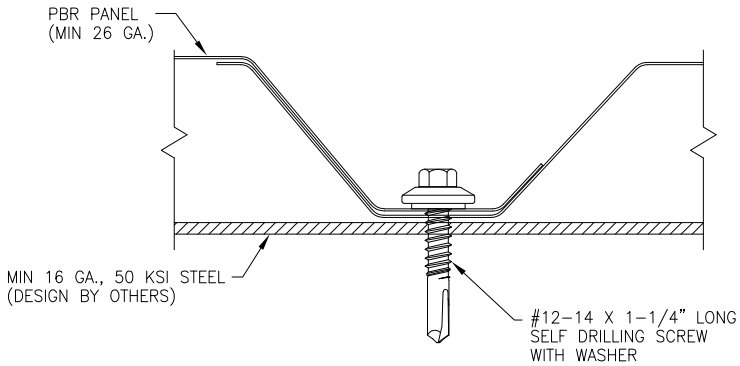

DETAIL 1

GENERAL NOTES:

1. STRUCTURAL WALL PANEL HAS BEEN DESIGNED IN ACCORDANCE WITH THE FLORIDA BUILDING CODE (FBC).
2. WALL PANELS SHALL BE MIN. 26 GA. (t = 0.017"). EFFECTIVE COVERING WIDTH OF PANEL = 36".
3. THE WALL PANELS SHALL BE INSTALLED OVER STRUCTURE AS SPECIFIED ON THIS DRAWING.
4. REQUIRED DESIGN WIND LOADS SHALL BE DETERMINED FOR EACH PROJECT. THIS PANEL SYSTEM MAY NOT BE INSTALLED WHEN THE REQUIRED DESIGN WIND LOADS ARE GREATER THAN THE ALLOWABLE DESIGN LOADS.
5. ALL FASTENERS MUST BE IN ACCORDANCE WITH THIS DRAWING & THE FLORIDA BUILDING CODE. IF A DIFFERENCE OCCURS BETWEEN THE MINIMUM REQUIREMENTS OF THIS DRAWING & THE CODE, THE CODE SHALL CONTROL.
6. SUPPORTS MUST BE DESIGNED TO WITHSTAND WIND LOADS AS REQUIRED FOR EACH APPLICATION AND ARE THE RESPONSIBILITY OF OTHERS.

DRAWN BY: B.S.	CHECKED BY: K.S.
PLOT:	DATE: 8/24/2023

NO.	REVISION DESCRIPTION	BY	DATE

DRAWING TITLE: PBA WALL PANEL

MANUFACTURER: ALLIANCE STEEL INC.
3333 SOUTH COUNCIL ROAD
OKLAHOMA CITY, OK 73179-4410
405 745 7500

CONSULTANTS
BALA SOCKALINGAM, PH.D., P.E.
1216 N LANSING AVE, SUITE C
TULSA, OK 74106
PHONE: 918-492-5992

DRAWING NO. 3088-2 REV.

PAGE NO. 1 OF 1

Section Properties:				Alliance Steel PBA Panel							
Gauge	Thickness in.	Weight psf	Yield Stress ksi	Allowable Shear V_a kips/ft	Moment of Inertia I_x in^4/ft	Top in Compression (Positive Bending)			Bottom in Compression (Negative Bending)		
						I_{xe} in^4/ft	S_{xe} in^3/ft	M_a in.kips/ft	I_{xe} in^4/ft	S_{xe} in^3/ft	M_a in.kips/ft
26	0.0180	0.875	80*	0.65	0.0420	0.035	0.047	1.690	0.035	0.040	1.427
24	0.0236	1.103	50	1.04	0.0533	0.049	0.061	1.827	0.050	0.060	1.783

Notes on Section Properties:

1. Section properties and allowables are calculated in accordance with North American Specification for the Design of Cold-Formed Steel Structural Members, 2016 Edition (Reaffirmed 2020), with Supplement 2, 2020 Edition.
2. I_x is full moment of inertia, I_{xe} +/- & S_{xe} +/- are effective moment of inertia and section modulus, M_a is allowable bending moment and V_a is allowable shear. All values are for one foot of panel width.
3. For design purposes, effective yield stress for Grade 80 steel was reduced to 60 ksi as per 2016 NAS AISI A3.1.2.
4. Minimum deliverable bare steel thickness should not be less than 0.95 of design thickness.

Allowable Reactions Based on Web Crippling Strength

Ga.	Minimum Bearing Length (in)	Allowable reaction load at support (kips/ft)	
		End	Interior
26	2.5	0.181	0.277
24		0.231	0.355

Ga.	Support Width (in)	Allowable Inward Loads (lb/ft^2)								
		Span (ft)								
		3	3.5	4	4.5	5	5.5	6	7	8
26	2.5	80.8	69.2	60.6	53.4	43.5	36.1	30.4	22.4	17.2
24		103.5	88.7	77.6	67.4	54.8	45.4	38.2	28.1	21.6
Ga.	**Support Thickness**	**Allowable Outward Loads (lb/ft^2)**								
		Span (ft)								
		3	3.5	4	4.5	5	5.5	6	7	8
26	16 Ga.	81.4	69.7	61.0	54.2	48.8	42.4	35.8	26.4	20.3
	14 Ga.	91.6	78.5	68.7	61.0	51.1	42.4	35.8	26.4	20.3
24	16 Ga.	81.4	69.7	61.0	54.2	48.8	44.4	39.1	28.8	22.1
	14 Ga.	91.6	78.5	68.7	61.0	54.9	46.5	39.1	28.8	22.1

Notes on Load Table:

1. Allowable load based on stress is the smallest load due to bending, shear and combined bending and shear, web crippling (inward), fastener capacity (outward) and deflection limit of L/120.
2. These loads are for panel strength and fastener capacity (#12-14 SDS). Supports, frames and all support connections must be designed to resist all loads imposed on the panel.
3. Panels must be installed as per Evaluation Report FL FL 41985.2 and Alliance Steel's current installation procedure.

1216 N. Lansing Ave. Suite C
Tulsa, OK 74106
918 492 5992

Bala Sockalingam, Ph.D., P.E.
FL 62240