Evaluation Report

"Reveal Series" Panel

Metal Wall Assembly

Manufacturer:

Berridge Manufacturing Company

1720 Maury Road

Houston, TX 77026

(800) 231-8127

for

Florida Product Approval

FL 41817.1 R2

Florida Building Code 9th Edition (2026)

Method: **2 - B**

Category: **Structural Components**

Sub - Category: **Structural Wall**

Product: "Reveal Series" Wall Panel

Material: Steel

This item has been digitally signed and sealed by James L. Buckner, P.E., on this date below. Printed copies of this document are not considered signed and sealed, and the signature must be verified on any electronic copies.

Prepared by:
James L. Buckner, P.E., S.E.C.B.
Florida Professional Engineer # 31242
Florida Evaluation ANE ID: 1916
Project Manager: Diana Galloway
Report No. 26-809-Reveal-SG-ER
(Revises 23-542-Reveal-SG-ER, FL 41817.1 R1)
Date: 08/20/2026

JAMES L. BUCKNER
LICENSE
No 31242
STATE OF FLORIDA
PROFESSIONAL ENGINEER

James L. Buckner, P.E.
FL31242
2026.08.20 11:38:10 -04'00'

Contents:

Evaluation Report Pages 1 – 13

Manufacturer:	**Berridge Manufacturing Company** 1720 Maury Road Houston, TX 77026 (800) 231-8127 www.berridge.com
Product Name:	**"Reveal Series" Panel**
Product Category:	Structural Components
Product Sub-Category	Structural Wall
Compliance Method:	State Product Approval Rule 61G20.005 (2) (b)
Product/System Description:	"Reveal Series" Panel Structural steel wall panels with concealed fasteners, and an interlocking seam edge. Panels may be installed horizontally or vertically to steel supports.
Product Assembly as Evaluated:	Refer to Page 4 of this report for product assembly components/materials & standards: 1. Wall Panel 2. Fasteners
Support:	**Steel Supports** (Design of steel support and its attachment to support framing is outside the scope of this evaluation.) **Description:** Material: Steel Thickness: 16 Gauge minimum Yield Strength: 40 ksi minimum Girt/Stud Size: 2" min. flange bearing
Performance:	Wind Uplift Resistance: • Design Uplift Pressure: **Refer to Table "A"** (Refer to "Table A" attachment details herein)

Performance Standards: The product described herein has demonstrated compliance with:
ASTM E 1592 – *Test Method for Structural Performance of Sheet Metal Wall/soffit and siding Systems By Uniform Static Air Pressure Difference*

Code Compliance: The product(s) described herein have demonstrated compliance with the performance standards listed above and complies with:
Florida Building Code 9th Edition (2026), Section 1708.2

Evaluation Report Scope: This product evaluation is limited to compliance with the structural requirements of the Florida Building Code, as related to the scope section to Florida Product Approval Rule 61G20.001.

Limitations and Conditions of Use:

Scope of "Limitations and Conditions of Use" for this evaluation:

This evaluation report for "Optional Statewide Approval" contains technical documentation, specifications and installation method(s) which include "Limitations and Conditions of Use" throughout the report in accordance with Rule 61G20-3.005. Per Rule 61G20-3.004, the Florida Building Commission is the authority to approve products under "Optional Statewide Approval".

- This report is a building code product evaluation per FLPE rule (FAC) 61G15-36 to comply with Florida product approval rule (FAC) 61G20-3. This evaluation report is part of the Florida Building Commission approval for the listed code related criteria. This report by James Buckner, P.E. and CBUCK Engineering is not a design certification of code compliance construction submittal documentation, per FBC section 107, for any individual structure, site specific or permit design.
- Diaphragm and axial load capacity is outside the scope of this evaluation.
- Design of support system is outside the scope of this report. Support shall be designed by others and shall comply with the FBC Chapters 22 for steel and Chapter 16 for structural loading.
- All metal components and fasteners shall be corrosion resistant in accordance with applicable sections of FBC. Installations located within 3000 feet of a saltwater coastline shall comply with Section 1711 in accordance with authorities having jurisdiction.
- Fire Classification is outside the scope of Rule 61G20-3 and is therefore not included in this evaluation.
- This evaluation report does not evaluate the use of this product for use in the High Velocity Hurricane Zone code section. (Dade & Broward Counties)

Option for application outside "Limitations and Conditions of Use"

Rule 61G20-3.005(1)(e) allows engineering analysis for "project specific approval by the local authorities having jurisdiction in accordance with the alternate methods and materials authorized in the Code". Any modification of the product as evaluated in this report and approved by the Florida Building Commission is outside the scope of this evaluation and will be the responsibility of others.

Quality Assurance:

The manufacturer has demonstrated compliance of products in accordance with the Florida Building Code and Rule 61G20.0005 (3) for manufacturing under a quality assurance program audited by an approved quality assurance entity through **UL, LLC (FBC Organization #: QUA 9625)**.

Components/Materials (by Manufacturer):

Wall Panel:	Berridge "Reveal Series" Panel
Material:	Steel
Thickness:	24 ga. (min.)
Panel Width:	Refer to Table A
Rib Height:	1-1/2"
Yield Strength:	40 ksi min.
Steel Grade:	Grade 40
Corrosion Resistance:	In compliance with FBC Section 1405.2
Fasteners:	
Type:	Hex-Washer-Head Self-Drilling Screw
Size:	**#12 -** 14 x 1-1/4" with 5/8" washer head
Corrosion Resistance:	Per FBC Section 1405.17 & 1403.12
Standard:	Per SAE J78-1979

Installation:

Installation Method:
(Refer to **"TABLE A"** and drawings at the end of this report.)

Install per the following:

- Support spacing: Per Table "A"
- Two (2) fasteners per max. support (girt/stud) and panel lap intersections
- Fasteners shall be centered in the flange of each attachment point, 1-1/4" apart.
- Minimum fastener penetration thru flange of steel support: 3/4".
- For panel construction at the end of panels, including starter clip refer to manufacturer's instructions and any site-specific design.
- Wall Panels may be installed vertically or horizontally.

Install the "Reveal Series" wall panel assembly in compliance with the installation method listed in this report and applicable code sections of FBC 9th Edition (2026). The installation method described herein is in accordance with the scope of this evaluation report. Refer to manufacturer's installation instructions as a supplemental guide for attachment.

TABLE "A" ALLOWABLE LOADS "Reveal Series, 24 GA. (min.) ATTACHED TO STEEL GIRTS"						
#	**Reveal Panel Model**	**Panel Width** (max.)	**Support Spacing** (max.)	**# Fasteners Per Attachment**	**Span Condition**	**Design Pressure (PSF)**
1.	**RS-725**	7-1/4"	48" (4'- 0")	2	3 or more	**- 41.6**
2.	**RS-725**	7-1/4"	24" (2'- 0")	2	3 or more	**- 136.6**
3.	**RS-9**	8-7/8"	48" (4'- 0")	2	3 or more	**- 54.35**
4.	**RS-9**	8-7/8"	24" (2'- 0")	2	3 or more	**- 161.3**
5.	**RS-11-5**	10-7/8"	48" (4'- 0")	2	3 or more	**- 41.6**
6.	**RS-11-5**	10-7/8"	24" (2'- 0")	2	3 or more	**- 136.6**
7.	**RS-11**	10-7/8"	48" (4'- 0")	2	3 or more	**- 54.35**
8.	**RS-11**	10-7/8"	24" (2'- 0")	2	3 or more	**- 161.3**
9.	**RS-145**	14-1/2"	48" (4'- 0")	2	3 or more	**- 41.6**
10.	**RS-145**	14-1/2"	24" (2'- 0")	2	3 or more	**- 136.6**

NOTES:

- Negative Pressure Outward/Positive Pressure Inward
- Allowable design pressure(s) for allowable stress design (ASD).
- Fastener Attachment to Steel Supports May Be Designed By A Qualified Design Professional As Required By The Florida Building Code For Site Specific Projects.
- Diaphragm and axial load capacity are not included in this evaluation

Referenced Data:

1. TAS 125-03 Uplift Test (per ASTM E 1592-05)
   By Force Engineering & Testing Inc., Inc. (FBC Organization #TST ID:5328)
   Report # 49-0085T-22A-D, Report Date: 12/4/22
2. Engineering Analysis
   By James L. Buckner, P.E. @ CBUCK Engineering (FBC Organization #ANE 1916)
3. Quality Assurance
   UL, LLC (FBC Organization #: QUA 9625)
4. Certification of Independence
   By James L. Buckner, P.E. @ CBUCK Engineering
   (FBC Organization # ANE 1916)

Installation Method
Berridge Manufacturing Company
"Reveal Series" Steel Wall Panel"

Profile Drawings

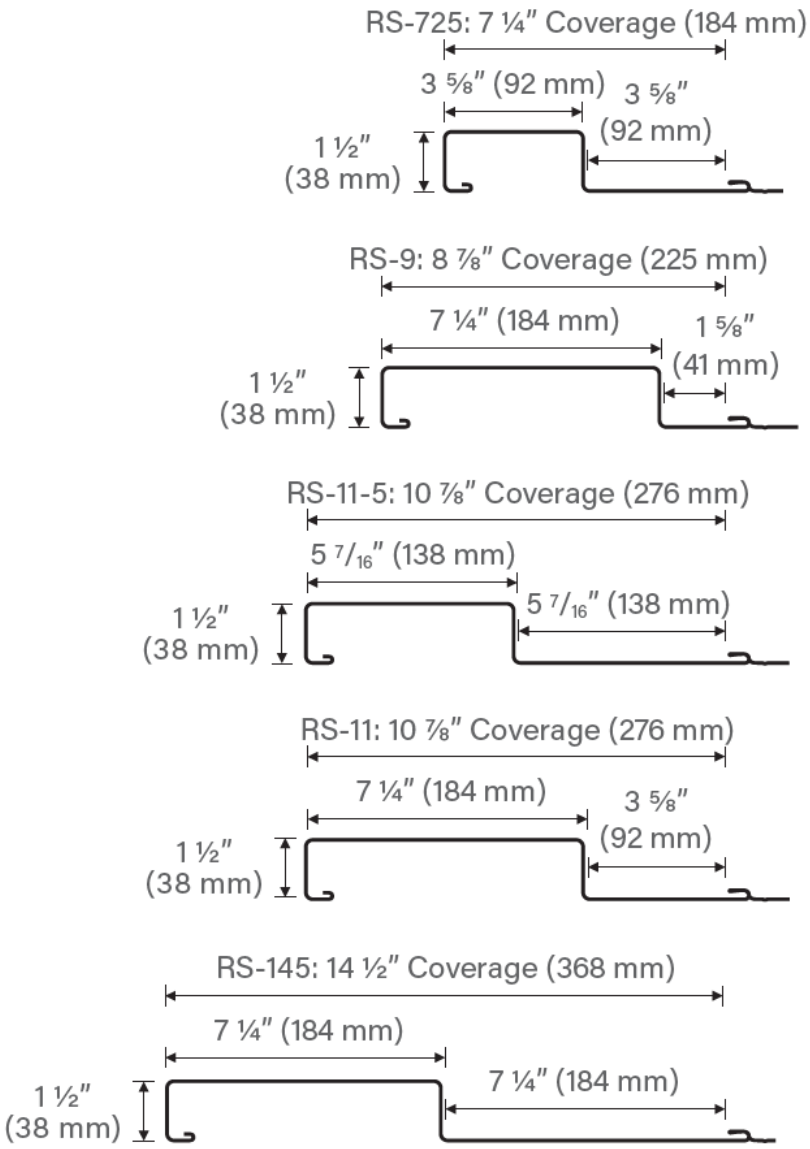

Typical "Reveal Series" Panels
Profile View

Installation Method
Berridge Manufacturing Company
"Reveal Series" Steel Wall Panel"

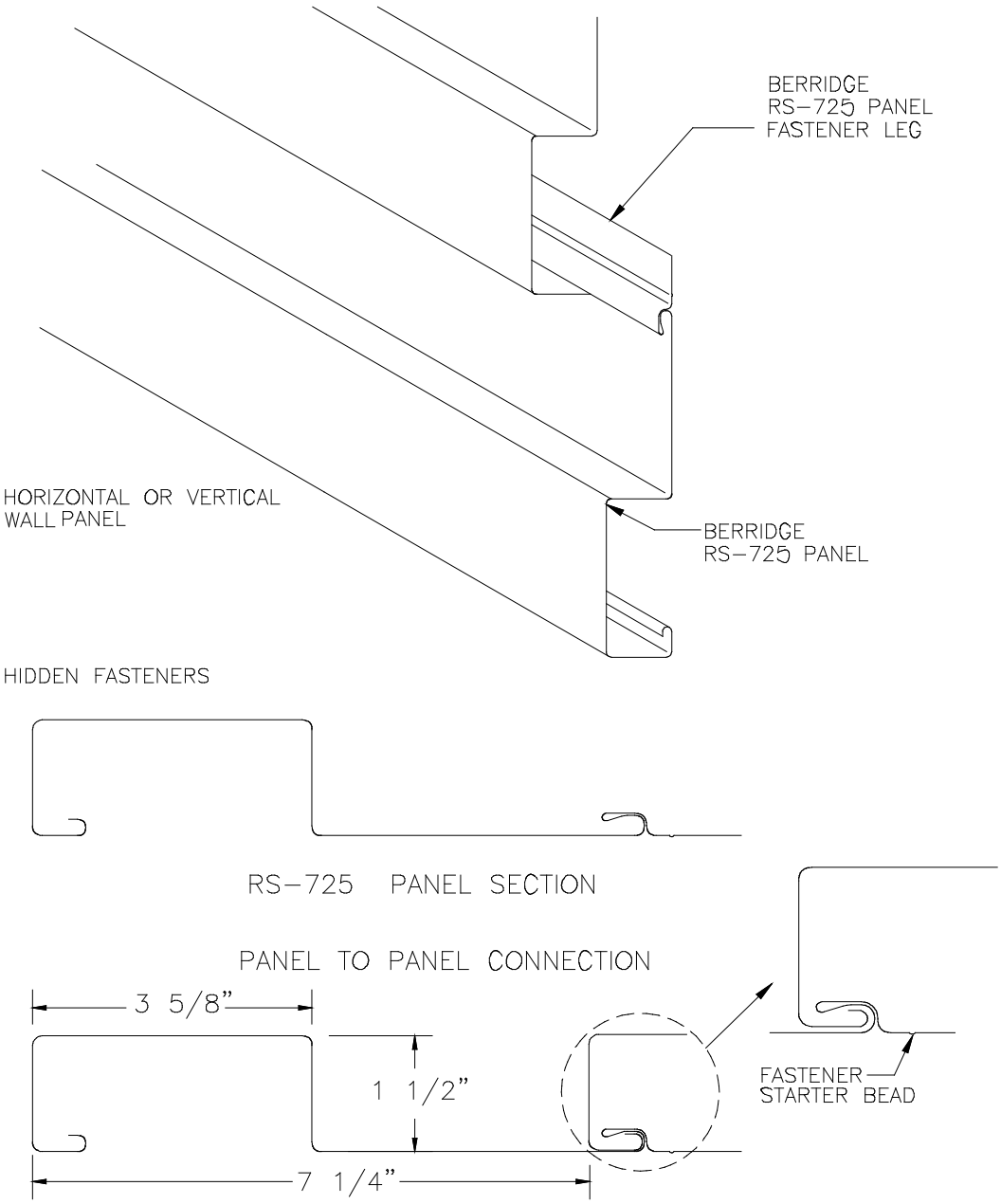

"Reveal Series RS-725"
Typical Panel Assembly Section View

Installation Method
Berridge Manufacturing Company
"Reveal Series" Steel Wall Panel"

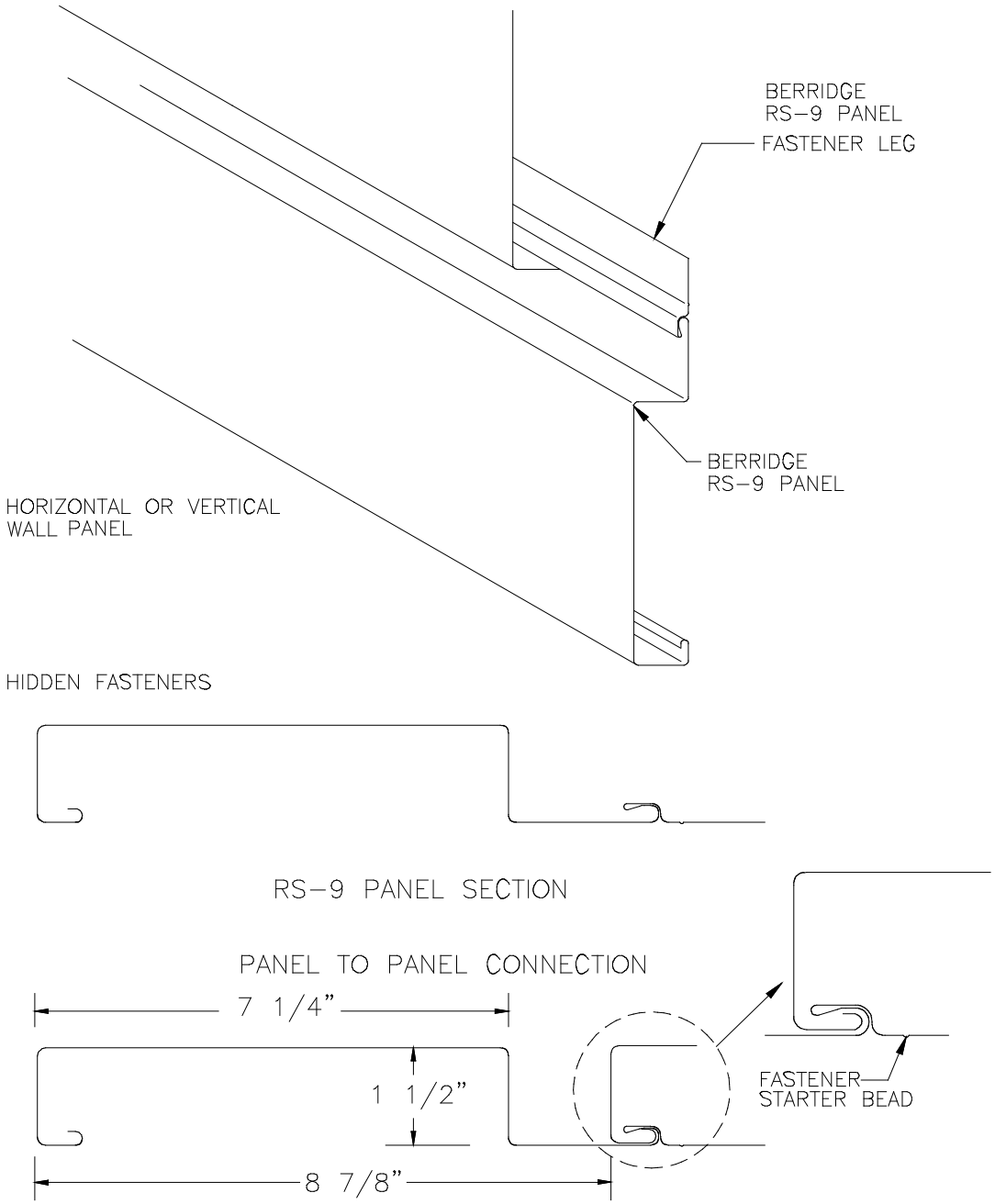

"Reveal Series RS-9"
Typical Panel Assembly Section View

Installation Method
Berridge Manufacturing Company
"Reveal Series" Steel Wall Panel"

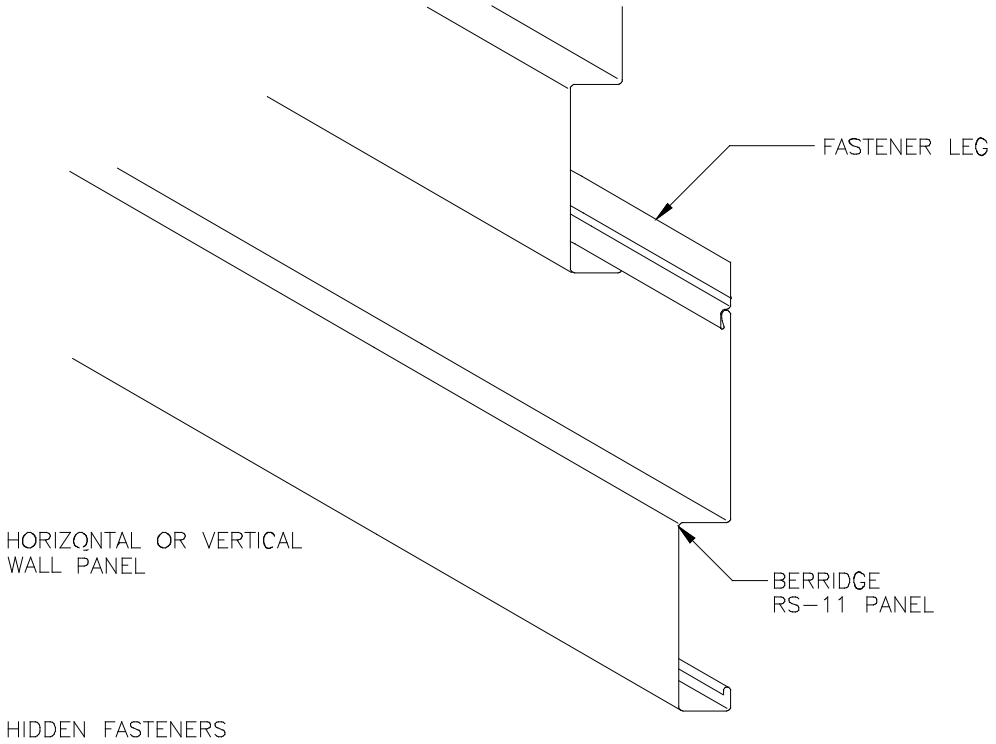

RS-11-5 PANEL SECTION

PANEL TO PANEL CONNECTION

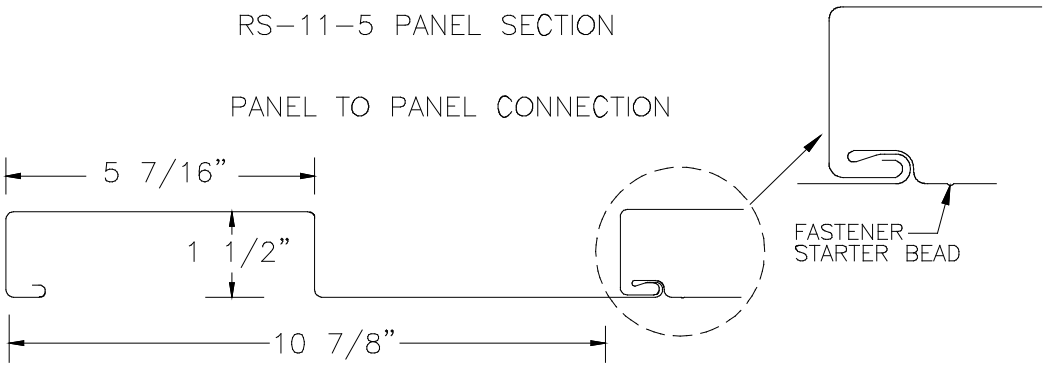

"Reveal Series RS-11-5"
Typical Panel Assembly Section View

Installation Method
Berridge Manufacturing Company
"Reveal Series" Steel Wall Panel"

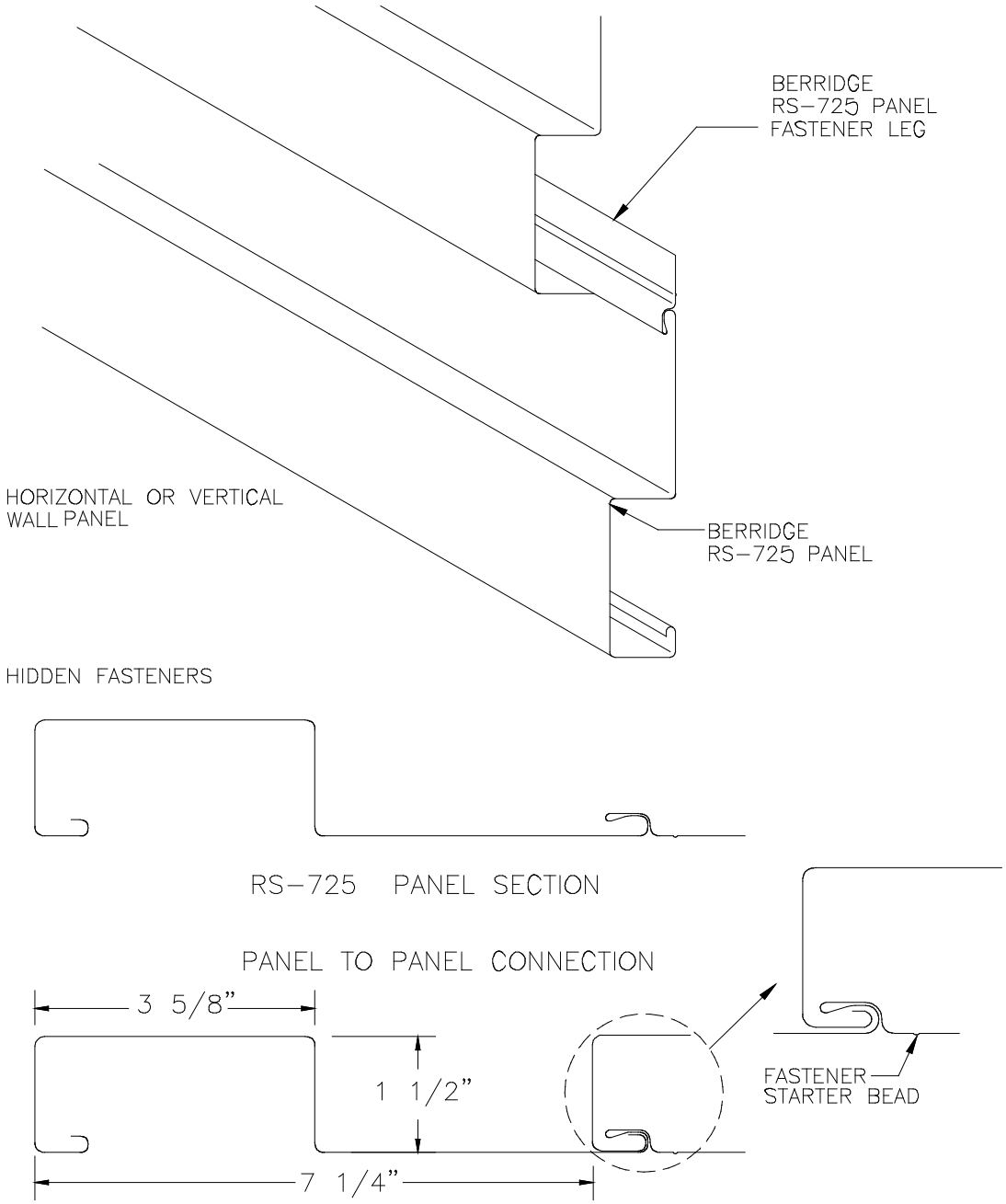

"Reveal Series RS-725"
Typical Panel Assembly Section View

Installation Method
Berridge Manufacturing Company
"Reveal Series" Steel Wall Panel"

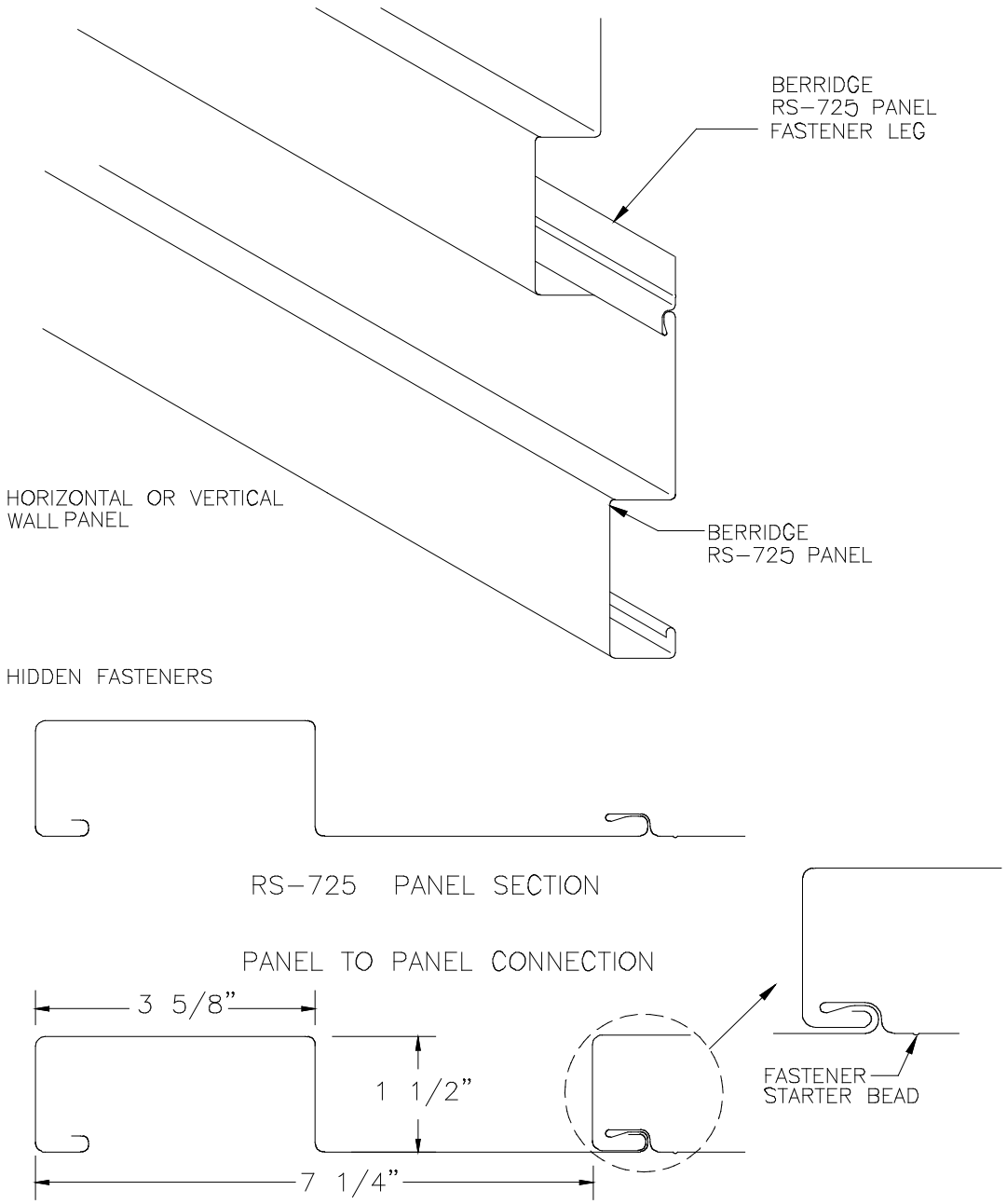

"Reveal Series RS-725"
Typical Panel Assembly Section View

Installation Method
Berridge Manufacturing Company
"Reveal Series" Steel Wall Panel"

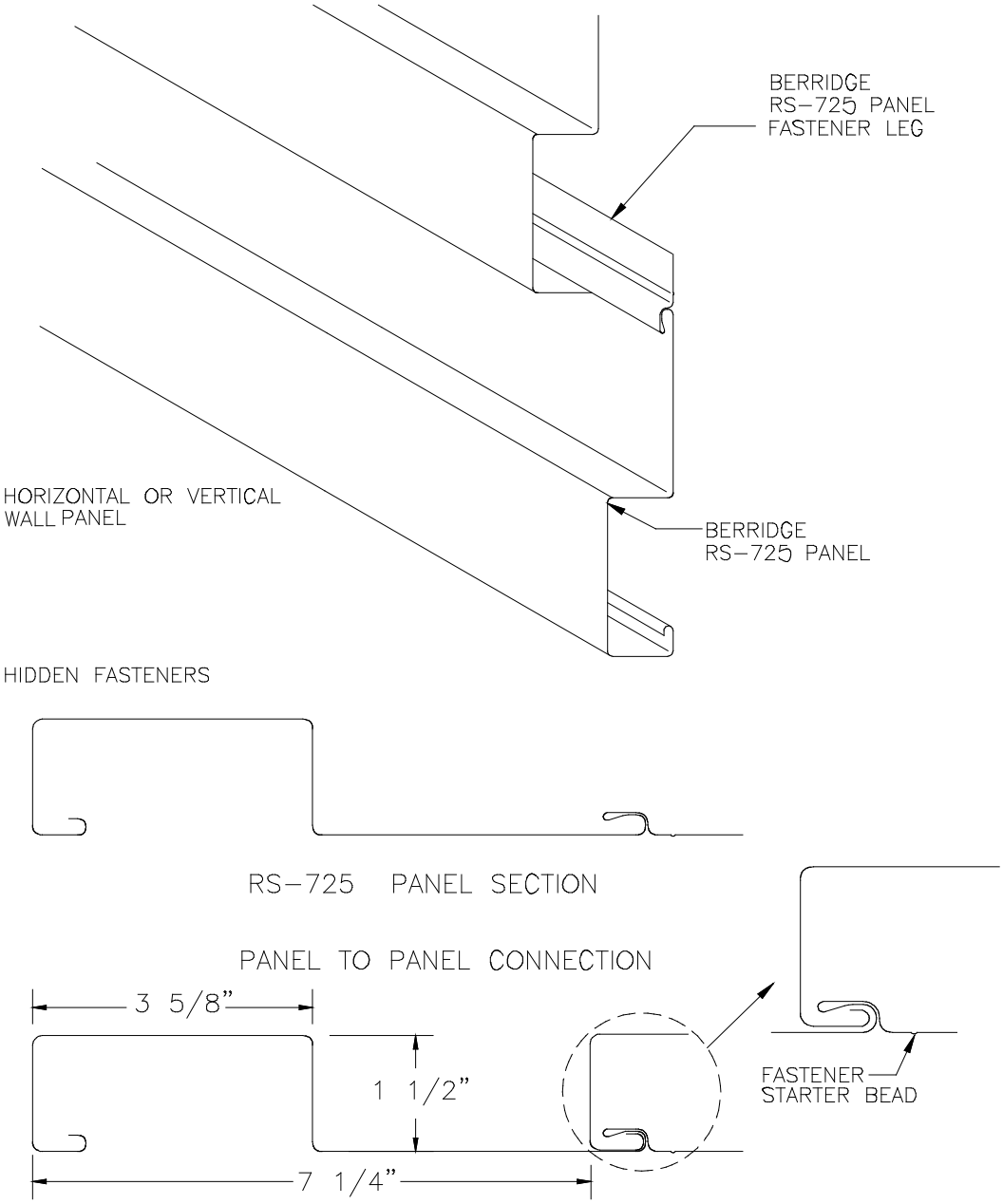

"Reveal Series RS-725"
Typical Panel Assembly Section View

TABLE "A" ALLOWABLE LOADS "Reveal Series, 24 GA. (min.) ATTACHED TO STEEL GIRTS"						
#	**Reveal Panel Model**	**Panel Width** (max.)	**Support Spacing** (max.)	**# Fasteners Per Attachment**	**Span Condition**	**Design Pressure (PSF)**
1.	**RS-725**	7-1/4"	48" (4'- 0")	2	3 or more	**- 41.6**
2.	**RS-725**	7-1/4"	24" (2'- 0")	2	3 or more	**- 136.6**
3.	**RS-9**	8-7/8"	48" (4'- 0")	2	3 or more	**- 54.35**
4.	**RS-9**	8-7/8"	24" (2'- 0")	2	3 or more	**- 161.3**
5.	**RS-11-5**	10-7/8"	48" (4'- 0")	2	3 or more	**- 41.6**
6.	**RS-11-5**	10-7/8"	24" (2'- 0")	2	3 or more	**- 136.6**
7.	**RS-11**	10-7/8"	48" (4'- 0")	2	3 or more	**- 54.35**
8.	**RS-11**	10-7/8"	24" (2'- 0")	2	3 or more	**- 161.3**
9.	**RS-145**	14-1/2"	48" (4'- 0")	2	3 or more	**- 41.6**
10.	**RS-145**	14-1/2"	24" (2'- 0")	2	3 or more	**- 136.6**