MIAMI-DADE COUNTY
PRODUCT CONTROL SECTION
11805 SW 26 Street, Room 208
Miami, Florida 33175-2474
T (786) 315-2590 F (786) 315-2599
www.miamidade.gov/economy

DEPARTMENT OF REGULATORY AND ECONOMIC RESOURCES (RER)
BOARD AND CODE ADMINISTRATION DIVISION

NOTICE OF ACCEPTANCE (NOA)

Greenheck Fan Corporation
P.O. Box 410
Schofield, WI 54476

SCOPE:

This NOA is being issued under the applicable rules and regulations governing the use of construction materials. The documentation submitted has been reviewed and accepted by Miami-Dade County RER-Product Control Section to be used in Miami Dade County and other areas where allowed by the Authority Having Jurisdiction (AHJ).

This NOA shall not be valid after the expiration date stated below. The Miami-Dade County Product Control Section (In Miami Dade County) and/or the AHJ (in areas other than Miami Dade County) reserve the right to have this product or material tested for quality assurance purposes. If this product or material fails to perform in the accepted manner, the manufacturer will incur the expense of such testing and the AHJ may immediately revoke, modify, or suspend the use of such product or material within their jurisdiction. RER reserves the right to revoke this acceptance if it is determined by Miami-Dade County Product Control Section that this product or material fails to meet the requirements of the applicable building code.

This product is approved as described herein and has been designed to comply with the Florida Building Code, including the High Velocity Hurricane Zone.

DESCRIPTION: Series R, FGI and FGR Steel/Aluminum Rooftop Fans

APPROVAL DOCUMENT: Drawing No. **HR2001** to **HR2009**, titled "R, FGI and FGR Series", sheets 1 through 9 of 9, dated 05/22/2019, prepared by Greenheck Fan Corporation, signed and sealed by Wayne K. Helmila, P.E. on 10/23/2023, bearing the Miami-Dade County Product Control revision stamp with the Notice of Acceptance number and expiration date by the Miami-Dade County Product Control Section.

MISSILE IMPACT RATING: Large and Small Missile Impact Resistant (Steel Fans Only)

LABELING: A permanent label with the manufacturer's name or logo, Schofield, WI or Saltillo, Coahuila, Mexico, model/series, and following statement: "Miami-Dade County Product Control Approved", is to be located on each unit.

RENEWAL of this NOA shall be considered after a renewal application has been filed and there has been no change in the applicable building code negatively affecting the performance of this product.

TERMINATION of this NOA will occur after the expiration date or if there has been a revision or change in the materials, use, and/or manufacture of the product or process. Misuse of this NOA as an endorsement of any product, for sales, advertising or any other purposes shall automatically terminate this NOA. Failure to comply with any section of this NOA shall be cause for termination and removal of NOA.

ADVERTISEMENT: The NOA number preceded by the words Miami-Dade County, Florida, and followed by the expiration date may be displayed in advertising literature. If any portion of the NOA is displayed, then it shall be done in its entirety.

INSPECTION: A copy of this entire NOA shall be provided to the user by the manufacturer or its distributors and shall be available for inspection at the job site at the request of the Building Official.

This NOA **renews** and **revises NOA # 22-0606.01** and consists of this page 1 and evidence pages E-1, E-2, E-3 and E-4, as well as approval document mentioned above.

The submitted documentation was reviewed by **Carlos M. Utrera, P.E.**

MIAMI-DADE COUNTY APPROVED

01/09/24

NOTICE OF ACCEPTANCE: EVIDENCE SUBMITTED

1. Evidence submitted under previous NOA's

A. DRAWINGS "***Submitted under NOA #09-0511.03"***

1. Drawing No. **HR2001** to **HR2007**, titled "R Series Units, FGI and FGR", sheets 1 through 7 of 7, dated 02/24/2009, 02/03/09, 02/05/2009 and 03/09/2009, prepared by Greenheck Fan Corporation, signed and sealed by L. David Rice, P.E.

B. TESTS "***Submitted under NOA# 09-0511.03"***

1. Test report on 1) Uniform Static Air Pressure Test per FBC, TAS 202-94
2) Large Missile Impact Test per FBC, TAS 201-94,
3) Cyclic Wind Pressure Test per FBC, TAS 203-94,
along with marked-up drawings and installation diagram of Galvanized Steel R-Series Hooded Rooftop Ventilating Fans, prepared by Architectural Testing, Inc., Test Report No. **88031.01-602-18**, dated 03/20/2009, signed and sealed by Joseph A. Reed, P.E.

2. Test report on 1) Uniform Static Air Pressure Test per FBC, TAS 202-94
2) Large Missile Impact Test per FBC, TAS 201-94,
3) Cyclic Wind Pressure Test per FBC, TAS 203-94,
along with marked-up drawings and installation diagram of Aluminum R-Series Hooded Rooftop Ventilating Fans, prepared by Architectural Testing, Inc., Test Report No. **88800.01-602-18**, dated 03/20/2009, signed and sealed by Joseph A. Reed, P.E.

C. CALCULATIONS "***Submitted under NOA #09-0511.03"***

1. Anchoring verification calculations, prepared by Rice Engineering, dated 04/30/2009, signed and sealed by L. David Rice, P.E.

D. QUALITY ASSURANCE

1. Miami-Dade Department of Regulatory and Economic Resources (RER)

E. MATERIAL CERTIFICATIONS

1. None.

F. STATEMENTS ***"Submitted under NOA #16-0209.03"***

1. Statement letter of code conformance to 5th edition (2014) FBC issued by Rice Engineering, dated 01/04/2016, signed and sealed by L. David Rice, P.E.

"Submitted under NOA #14-0513.10"

2. Statement letter of code conformance to 2010 FBC issued by Rice Engineering, dated 04/30/2014, signed and sealed by L. David Rice, P.E.

"***Submitted under NOA #09-0511.03"***

3. No financial interest letter issued by Rice Engineering, dated 04/28/2009, signed and sealed by L. David Rice, P.E.

Carlos M. Utrera, P.E.
Product Control Examiner
NOA No. 23-1122.03
Expiration Date: July 8, 2029
Approval Date: January 18, 2024

NOTICE OF ACCEPTANCE: EVIDENCE SUBMITTED

2. Evidence submitted under NOA # 19-0808.02

A. DRAWINGS

1. Drawing No. **HR2001** to **HR2008**, titled "R, FGI and FGR Series", sheets 1 through 8 of 8, dated 02/24/2009, 02/03/2009, 02/05/2009 and 03/09/2009 and 05/22/2019, prepared by Greenheck Fan Corporation, signed and sealed by Wayne K. Helmila, P.E. on 08/28/2019.

B. TESTS

1. Test report on 1) Uniform Static Air Pressure Test per FBC, TAS 202-94
2) Large Missile Impact Test per FBC, TAS 201-94,
3) Cyclic Wind Pressure Test per FBC, TAS 203-94,
along with marked-up drawings and installation diagram of a RBE-2H48 Galvanized Steel Rooftop Hooded Ventilating Fan with a GPF Curb, prepared by Quast Consulting & Testing, Inc., Test Report No. **QCT19-5300.01-R1**, dated 08/26/2019, signed and sealed by Brian M. Sasman, P.E.

2. Test report on 1) Uniform Static Air Pressure Test per FBC, TAS 202-94
2) Cyclic Wind Pressure Test per FBC, TAS 203-94,
along with marked-up drawings and installation diagram of a RBE-2H48 Aluminum Rooftop Hooded Ventilating Fan with a GPF Curb, prepared by Quast Consulting & Testing, Inc., Test Report No. **QCT19-5300.02-R1**, dated 08/26/2019, signed and sealed by Brian M. Sasman, P.E.

C. CALCULATIONS

1. Anchoring verification calculations prepared by Rice Engineering, dated 07/22/2019, signed and sealed by Wayne K. Helmila, P.E.

D. QUALITY ASSURANCE

1. Miami-Dade Department of Regulatory and Economic Resources (RER).

E. MATERIAL CERTIFICATIONS

1. None.

F. STATEMENTS

1. Statement letter of code conformance to 6th edition (2017) FBC issued by Rice Engineering, dated 07/26/2019, signed and sealed by Wayne K. Helmila, P.E.

2. No financial interest letter issued by Rice Engineering, dated 08/28/2019, signed and sealed by Wayne K. Helmila, P.E.

3. Distributor agreement dated 08/28/2019.

Carlos M. Utrera, P.E.
Product Control Examiner
NOA No. 23-1122.03
Expiration Date: July 8, 2029
Approval Date: January 18, 2024

NOTICE OF ACCEPTANCE: EVIDENCE SUBMITTED

3. Evidence submitted under NOA # 21-1122.09

A. DRAWINGS

1. Drawing No. **HR2001** to **HR2008**, titled "R, FGI and FGR Series", sheets 1 through 8 of 8, dated 01/10/2022, prepared by Greenheck Fan Corporation, signed and sealed by Wayne K. Helmila, P.E.

B. TESTS

1. None.

C. CALCULATIONS

1. Anchoring verification calculations prepared by Rice Engineering, dated 10/18/2021, signed and sealed by Wayne K. Helmila, P.E.

D. QUALITY ASSURANCE

1. Miami-Dade Department of Regulatory and Economic Resources (RER).

E. MATERIAL CERTIFICATIONS

1. None.

F. STATEMENTS

1. Statement letter of code conformance to 7th edition (2020) of the FBC, issued by Rice Engineering, dated 10/25/2021, signed and sealed by Wayne K. Helmila, P.E.

Carlos M. Utrera, P.E.
Product Control Examiner
NOA No. 23-1122.03
Expiration Date: July 8, 2029
Approval Date: January 18, 2024

NOTICE OF ACCEPTANCE: EVIDENCE SUBMITTED

4. Evidence submitted under NOA # 22-0606.01 and new

A. DRAWINGS

1. Drawing No. **HR2001** to **HR2009**, titled "R, FGI and FGR Series", sheets 1 through 9 of 9, dated 05/22/2019, prepared by Greenheck Fan Corporation, signed and sealed by Wayne K. Helmila, P.E. on 10/23/2023.

B. TESTS

1. None.

C. CALCULATIONS *"Submitted under NOA # 22-0606.01"*

1. Anchoring verification calculations prepared by Rice Engineering, dated 07/08/2022, signed and sealed by Wayne K. Helmila, P.E.

D. QUALITY ASSURANCE

1. Miami-Dade Department of Regulatory and Economic Resources (RER).

E. MATERIAL CERTIFICATIONS

1. None.

F. STATEMENTS

1. Statement letter of code conformance to 8th edition (2023) of the FBC, issued by Rice Engineering, dated 10/24/2023, signed and sealed by Wayne K. Helmila, P.E.

2. Statement letter of no financial interest, issued by Rice Engineering, dated 10/24/2023, signed and sealed by Wayne K. Helmila, P.E.

"Submitted under NOA # 22-0606.01"

3. Statement letter of code conformance to 7th edition (2020) of the FBC, issued by Rice Engineering, dated 07/08/2022, signed and sealed by Wayne K. Helmila, P.E.

Carlos M. Utrera, P.E.
Product Control Examiner
NOA No. 23-1122.03
Expiration Date: July 8, 2029
Approval Date: January 18, 2024

REVISION	DCR	BY	DATE	SYM
UPDATE SHEET NO. IN TITLE BLOCK		DFY	8/17 2022	1

PRODUCT REVISED
as complying with the Florida Building Code
NOA-No. 23-1122.03
Expiration Date 07/08/2029
By
Miami-Dade Product Control

NOTES:

1. GALVANIZED INSTANCES OF MODELS RE, RS, RCE, RCS, RBE, RBS, RBF, RBCE, RBCS, AND RBCF HAVE BEEN SUCCESSFULLY TESTED IN ACCORDANCE WITH MIAMI-DADE TEST PROTOCOLS TAS-201 (LARGE MISSILE IMPACT), TAS-202 (STATIC LOADING), AND TAS-203 (CYCLIC WIND LOADING). ALUMINUM INSTANCE OF ABOVE STATED MODELS HAVE SUCCESSFULLY TESTED IN ACCORDANCE WITH MIAMI-DADE TEST PROTOCOLS TAS-202 (STATIC PRESSURE) AND TAS-203 (CYCLIC WIND LOADING).
2. ROOF STRUCTURE MUST BE DESIGNED TO WITHSTAND THE WEIGHT AND LOADING TRANSMITTED BY ROOF TOP FANS. FASTENERS SHALL BE AS SPECIFIED AND INSTALLED AS DETAILED.
3. DESIGN, TESTING, AND INSTALLATION CONFORMS TO FLORIDA BUILDING CODE.
4. DESIGN PRESSURE = ±70 PSF FOR STEEL (LARGE MISSILE IMPACT RESISTANT) AND ±40 PSF FOR ALUMINUM.
5. TESTED FOR AREAS INCLUDING HIGH VELOCITY HURRICANE ZONES.
6. THESE FANS HAVE NOT BEEN TESTED FOR WIND-DRIVEN RAIN TESTING PER FLORIDA BUILDING CODE, TAS-100(A)-95.
7. THIS APPROVAL IS FOR THE STRUCTURAL CAPACITY AND IMPACT RATING OF THE EXTERIOR HOUSING ONLY, IT DOES NOT INCLUDE ANY INTERIOR MECHANISM OR ELECTRICAL COMPONENT.

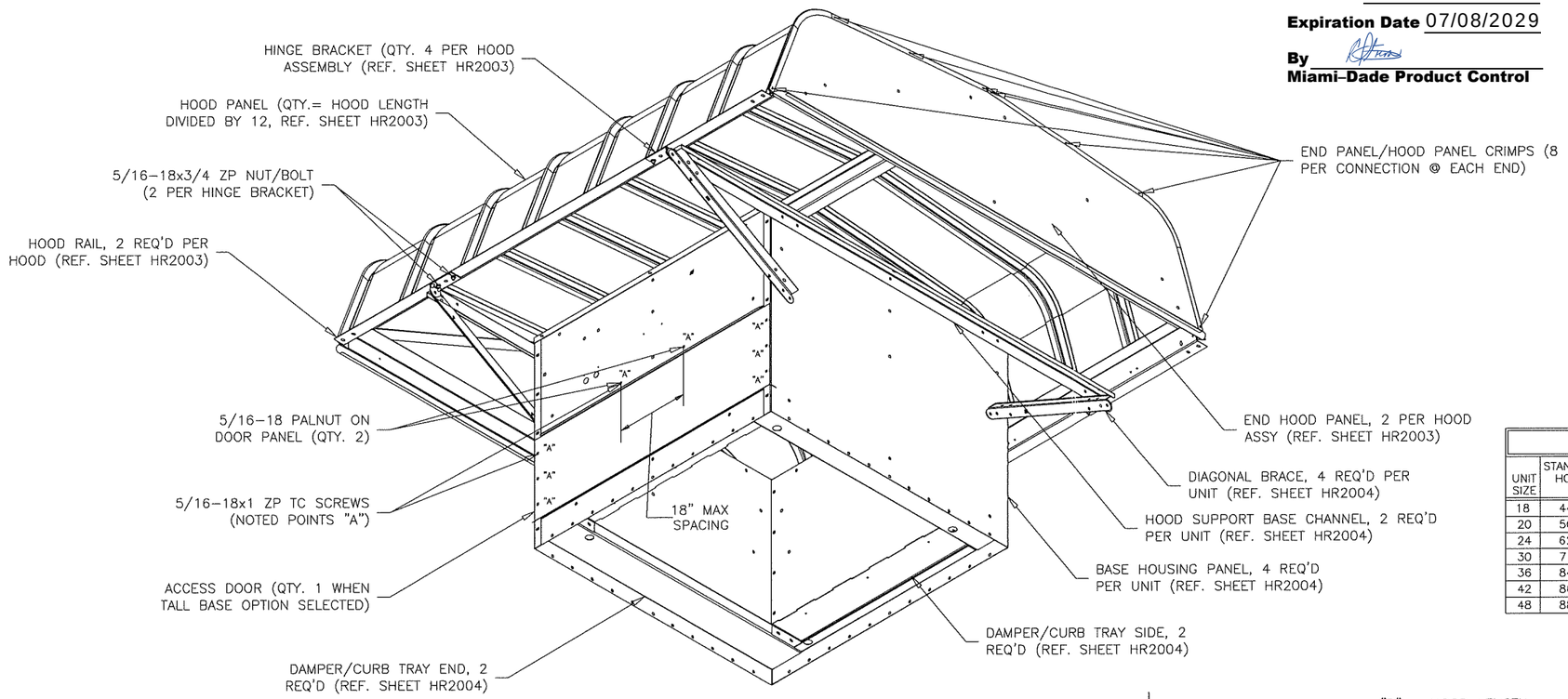

EXHAUST/SUPPLY RE, RS, RCE, RCS, RBE, RBS, RBF, RBCE, RBCS, RBCF										
UNIT SIZE	STANDARD HOOD A	FILTERED HOOD A	STANDARD HOOD B	FILTERED HOOD B	C	D	E	F	APPROX. WEIGHT (LBS.) STEEL	APPROX. WEIGHT (LBS.) ALUMINUM
18	44.00		48.00		28.25	28.25	13.00	10.00	185	160
20	50.00	50.00	48.00	48.00	30.25	30.25	16.00	11.00	220	190
24	62.00	62.00	60.00	60.00	34.25	34.25	18.00	11.00	260	225
30	71.00	74.00	72.00	84.00	40.25	40.25	20.00	14.00	295	250
36	84.00	90.00	84.00	84.00	46.25	46.25	22.00	17.50	340	290
42	86.00	93.00	96.00	96.00	52.25	52.25	24.00	18.50	465	395
48	88.00	---	120.00	---	58.25	58.25	24.00	22.00	866	551

RICE
ENGINEERING
105 School Creek Trail
Luxemburg, WI 54217
Phone: (920) 617-1042
Fax: (920) 617-1100
www.rice-inc.com

Florida Firm No: F-01000005061
Certificate of Authorization: #9090
Wayne K. Helmila
Registration No: 59092

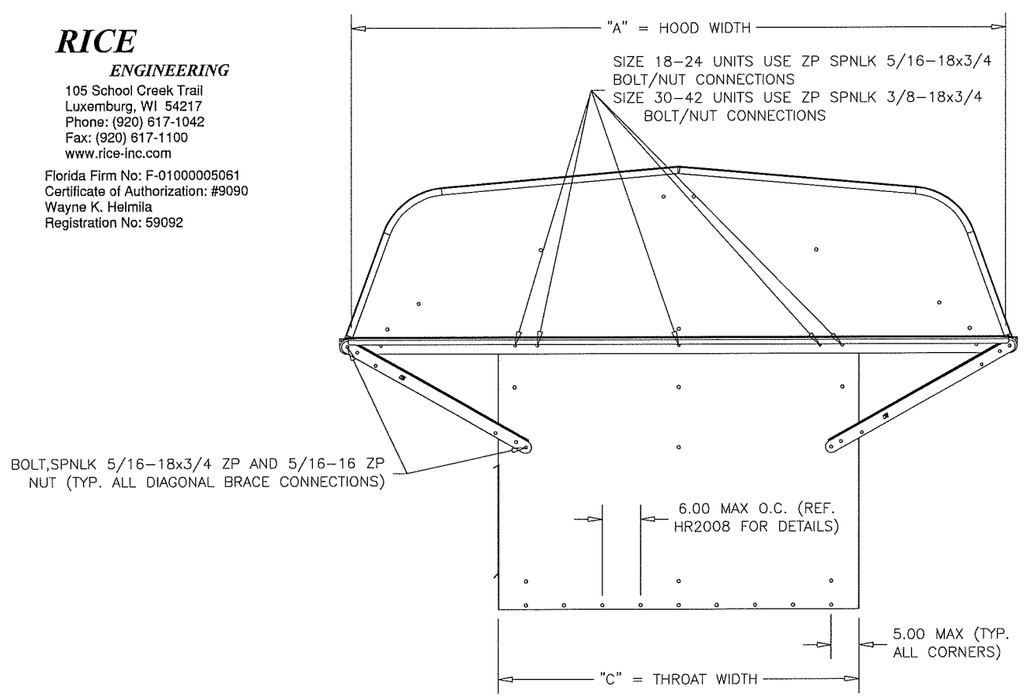

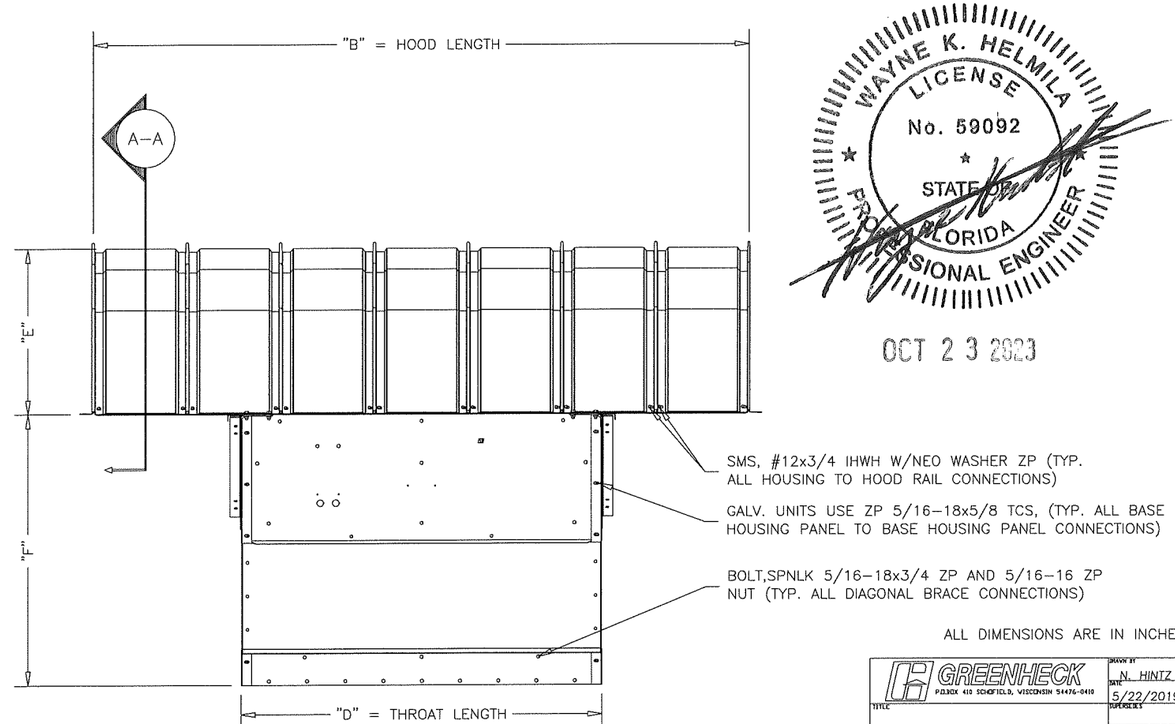

WAYNE K. HELMILA
LICENSE
No. 59092
STATE OF FLORIDA
PROFESSIONAL ENGINEER

OCT 2 3 2023

ALL DIMENSIONS ARE IN INCHES

GREENHECK
P.O.BOX 410 SCHOFIELD, WISCONSIN 54476-0410

DRAWN BY	N. HINTZ
DATE	5/22/2019
SUPERSEDES	
SCALE	1/4.5
CAD DRAWING NO.	HR2001
CCD	
ENG. REF.	

TITLE: R SERIES UNITS SHEET 1 OF 9

D

REVISION	DCR	BY	DATE	SYM
UPDATE SHEET NO. IN TITLE BLOCK		DFY	8/17 2022	1

PRODUCT REVISED
as complying with the Florida Building Code
NOA-No. 23-1122.03
Expiration Date 07/08/2029
By [signature]
Miami-Dade Product Control

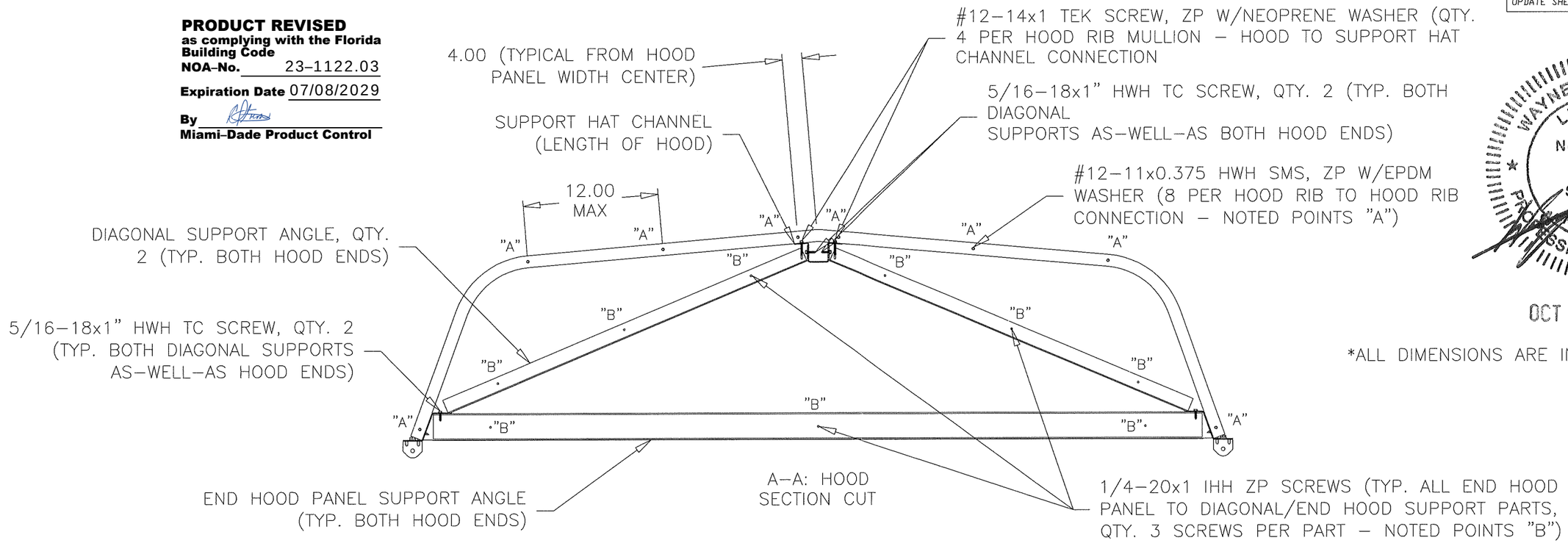

A-A: HOOD SECTION CUT

WAYNE K. HELMILA LICENSE No. 59092 STATE OF FLORIDA PROFESSIONAL ENGINEER

OCT 2 3 2023

*ALL DIMENSIONS ARE IN INCHES

RICE
ENGINEERING
105 School Creek Trail
Luxemburg, WI 54217
Phone: (920) 617-1042
Fax: (920) 617-1100
www.rice-inc.com
Florida Firm No: F-01000005061
Certificate of Authorization: #9090
Wayne K. Helmila
Registration No: 59092

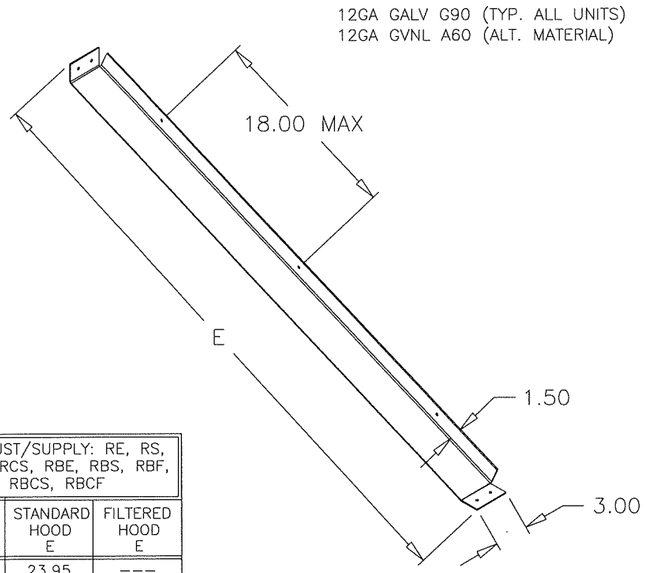

DIAGONAL SUPPORT ANGLE

EXHAUST/SUPPLY: RE, RS, RCE, RCS, RBE, RBS, RBF, RBCE, RBCS, RBCF		
UNIT SIZE	STANDARD HOOD E	FILTERED HOOD E
18	23.95	---
20	28.06	28.06
24	34.25	
30	39.16	40.48
36	45.84	48.53
42	45.91	48.98
48	48.98	57.56

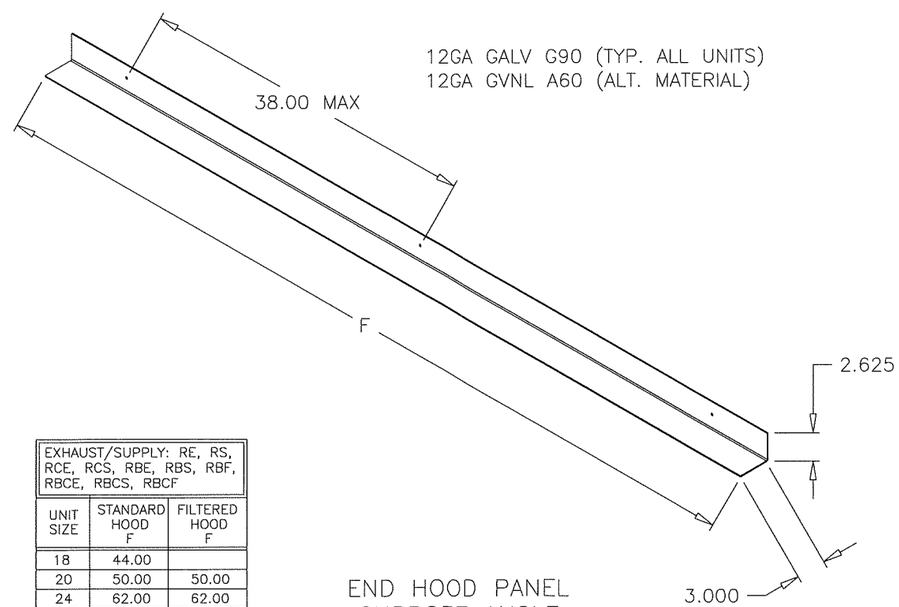

END HOOD PANEL SUPPORT ANGLE

EXHAUST/SUPPLY: RE, RS, RCE, RCS, RBE, RBS, RBF, RBCE, RBCS, RBCF		
UNIT SIZE	STANDARD HOOD F	FILTERED HOOD F
18	44.00	
20	50.00	50.00
24	62.00	62.00
30	71.00	71.00
36	84.00	84.00
42	82.00	82.00
48	87.00	87.00

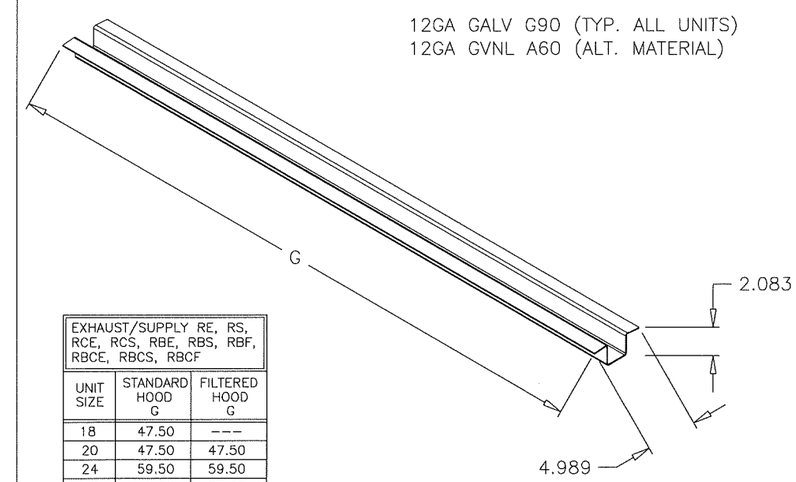

SUPPORT HAT CHANNEL

EXHAUST/SUPPLY RE, RS, RCE, RCS, RBE, RBS, RBF, RBCE, RBCS, RBCF		
UNIT SIZE	STANDARD HOOD G	FILTERED HOOD G
18	47.50	---
20	47.50	47.50
24	59.50	59.50
30	71.50	83.50
36	83.5	83.50
42	95.50	95.50
48	119.50	---

GREENHECK
PIELBOX 410 SCHOFIELD, WISCONSIN 54476-0410

TITLE: R/FG SERIES UNITS INTERNAL STRUCTURE SHEET 2 OF 9

DRAWN BY: N. HINTZ
DATE: 5/22/2019
SCALE: 1/6
CAD DRAWING NO.: HR2002

REVISION	DCR	BY	DATE	SYM
UPDATE SHEET NO. IN TITLE BLOCK		DFY	8/17 2022	1

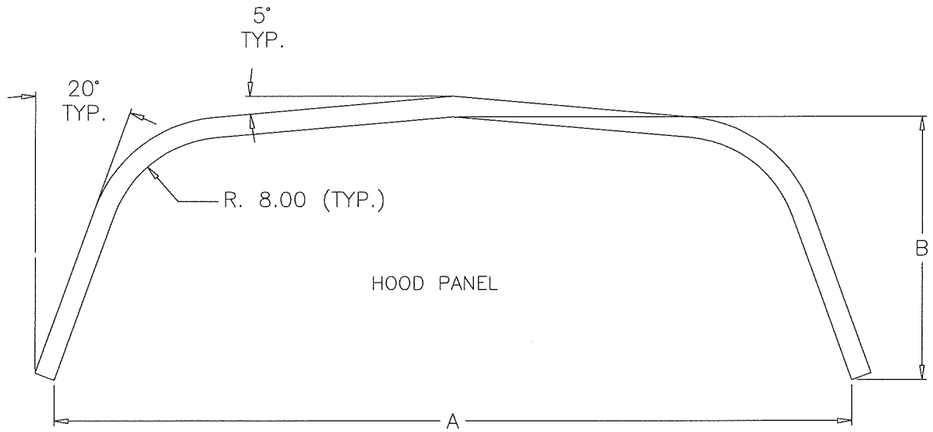

EXHAUST/SUPPLY RE, RS, RCE, RCS, RBE, RBS, RBF, RBCE, RBCS, RBCF				
UNIT SIZE	STANDARD HOOD A	FILTERED HOOD A	STANDARD HOOD B	FILTERED HOOD B
18	44.00		13.00	
20	50.00	50.00	16.00	16.00
24	62.00	62.00	18.00	18.00
30	71.00	74.00	20.00	20.00
36	84.00	90.00	22.00	22.00
42	82.00	89.00	24.00	24.00
48	87.00	---	26.50	---

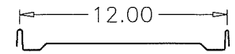

HOOD PANEL PROFILE

HOOD PANEL MATERIAL

22 GA. GALV. G90
22 GA. GVNL. A60
0.040 AL. 1100–H14

RICE
ENGINEERING
105 School Creek Trail
Luxemburg, WI 54217
Phone: (920) 617-1042
Fax: (920) 617-1100
www.rice-inc.com

Florida Firm No: F-01000005061
Certificate of Authorization: #9090
Wayne K. Helmila
Registration No: 59092

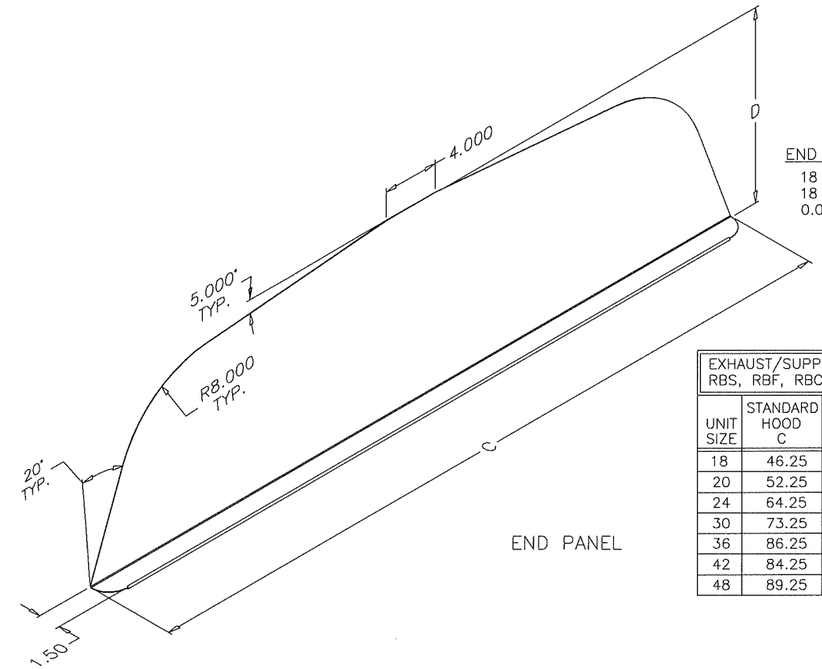

END PANEL MATERIAL

18 GA. GALV. G90
18 GA. GVNL. A60
0.063 AL. 1100–H14

END PANEL

EXHAUST/SUPPLY RE, RS, RCE, RCS, RBE, RBS, RBF, RBCE, RBCS, RBCF				
UNIT SIZE	STANDARD HOOD C	FILTERED HOOD C	STANDARD HOOD D	FILTERED HOOD D
18	46.25		13.75	
20	52.25	52.25	16.75	16.75
24	64.25	64.25	18.75	18.75
30	73.25	76.25	20.75	20.75
36	86.25	92.25	22.75	22.75
42	84.25	91.25	24.75	24.75
48	89.25	---	27.50	---

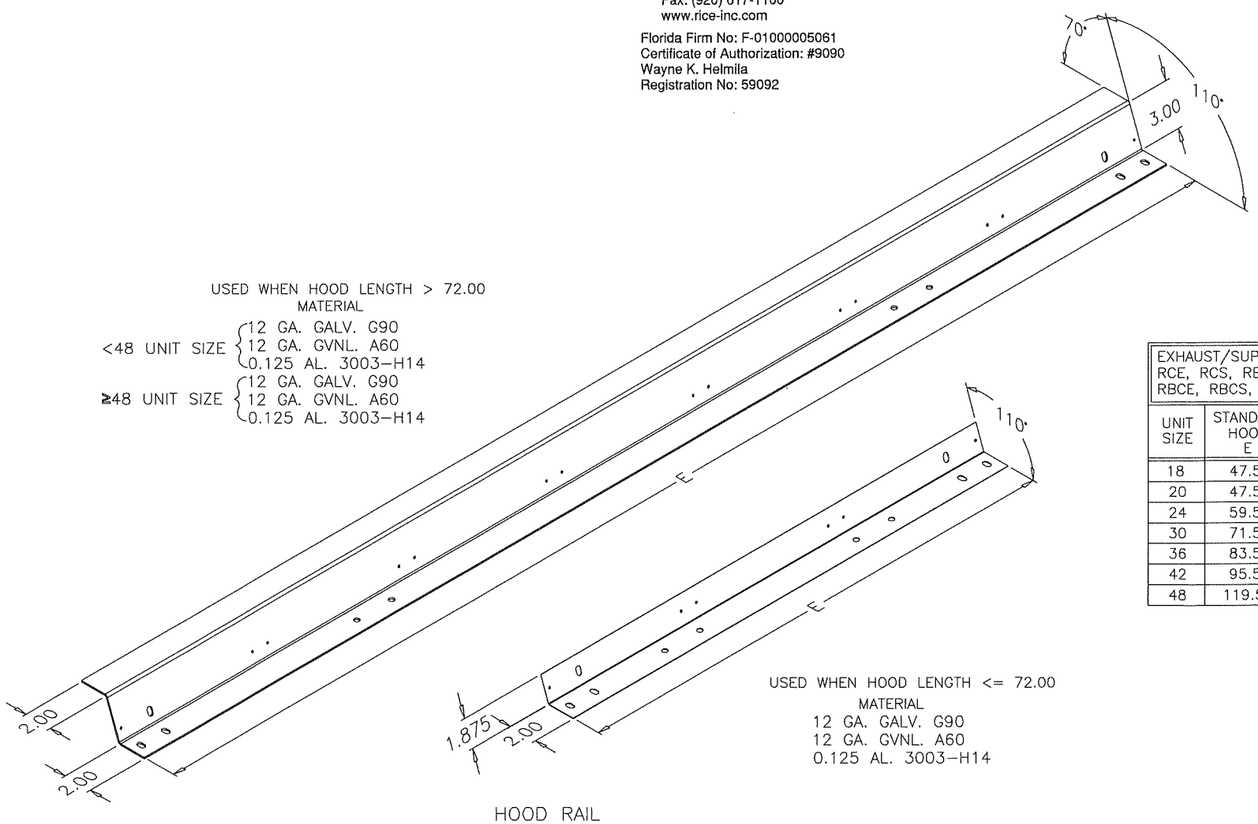

USED WHEN HOOD LENGTH > 72.00
MATERIAL
<48 UNIT SIZE { 12 GA. GALV. G90, 12 GA. GVNL. A60, 0.125 AL. 3003–H14
≥48 UNIT SIZE { 12 GA. GALV. G90, 12 GA. GVNL. A60, 0.125 AL. 3003–H14

HOOD RAIL

USED WHEN HOOD LENGTH <= 72.00
MATERIAL
12 GA. GALV. G90
12 GA. GVNL. A60
0.125 AL. 3003–H14

EXHAUST/SUPPLY RE, RS, RCE, RCS, RBE, RBS, RBF, RBCE, RBCS, RBCF		
UNIT SIZE	STANDARD HOOD E	FILTERED HOOD E
18	47.50	---
20	47.50	47.50
24	59.50	59.50
30	71.50	83.50
36	83.5	83.50
42	95.50	95.50
48	119.50	---

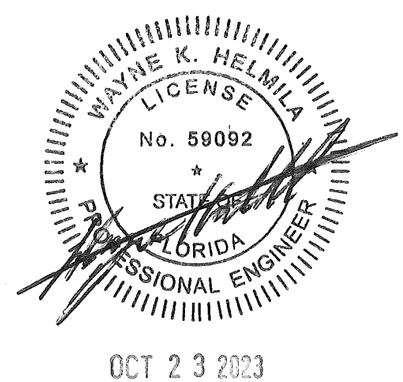

OCT 2 3 2023

HINGE BRACKET MATERIAL

11 GA. GALV. G90

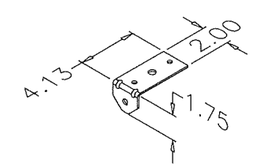

HINGE BRACKET

PRODUCT REVISED
as complying with the Florida Building Code
NOA-No. 23-1122.03
Expiration Date 07/08/2029
By
Miami-Dade Product Control

ALL DIMENSIONS ARE IN INCHES

GREENHECK
P.O.BOX 410 SCHOFIELD, WISCONSIN 54476-0410

DRAWN BY	N. HINTZ
DATE	5/22/2019
SCALE	1/4.5
CAD DRAWING NO.	HR2003
TITLE	R SERIES UNITS SHEET 3 OF 9

REVISION	DCR	BY	DATE	SYM
UPDATE SHEET NO. IN TITLE BLOCK		DFY	8/17 2022	1

HOOD SUPPORT BASE CHANNEL

HOOD SUPPORT BASE CHANNEL MATERIAL

10 GA. GALV. G90
10 GA. GVNL. A60

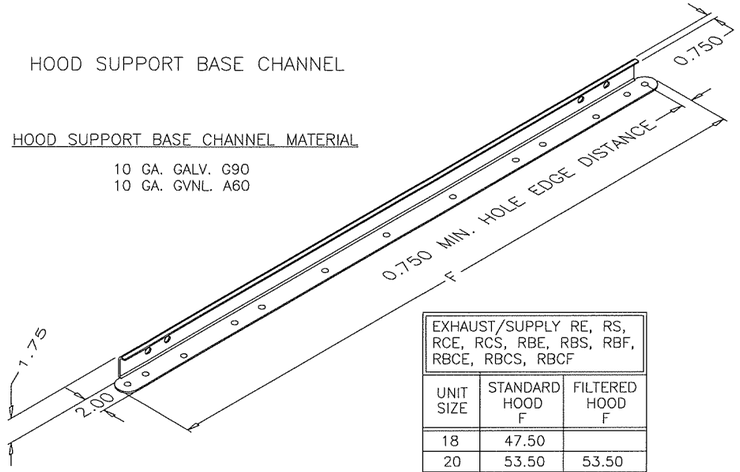

EXHAUST/SUPPLY RE, RS, RCE, RCS, RBE, RBS, RBF, RBCE, RBCS, RBCF		
UNIT SIZE	STANDARD HOOD F	FILTERED HOOD F
18	47.50	
20	53.50	53.50
24	65.50	65.50
30	74.50	77.50
36	87.50	93.50
42	85.50	92.50
48	90.50	---

BASE HOUSING PANEL MATERIAL

18 GA. GALV. G90
18 GA. GVNL. A60
0.063 AL. 1100-H12
0.080 AL. 1100-H12 IF G >46.00

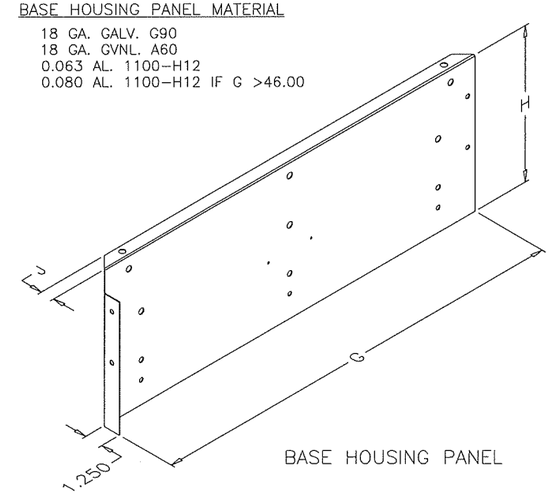

BASE HOUSING PANEL

EXHAUST/SUPPLY RE, RS, RCE, RCS, RBE, RBS, RBF, RBCE, RBCS, RBCF			
UNIT SIZE	G	H	J
18	28.19	10.00	1.00
20	30.25	11.00	0.94
24	34.25	11.00	0.94
30	40.25	14.00	0.94
36	46.25	17.50	0.94
42	52.19	18.50	0.94
48	58.68	36.74	0.94

RICE
ENGINEERING
105 School Creek Trail
Luxemburg, WI 54217
Phone: (920) 617-1042
Fax: (920) 617-1100
www.rice-inc.com

Florida Firm No: F-01000005061
Certificate of Authorization: #9090
Wayne K. Helmila
Registration No: 59092

WAYNE K. HELMILA
LICENSE
No. 59092
STATE OF FLORIDA
PROFESSIONAL ENGINEER

OCT 2 3 2023

DIAGONAL BRACE MATERIAL

10 GA. GALV. G90
10 GA. GVNL. A60

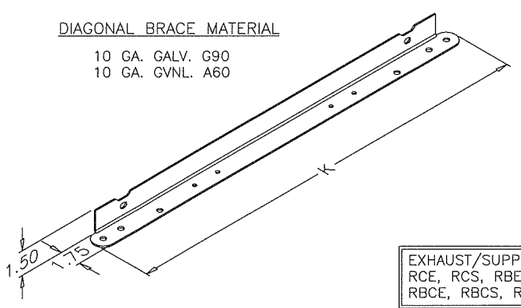

DIAGONAL BRACE

EXHAUST/SUPPLY RE, RS, RCE, RCS, RBE, RBS, RBF, RBCE, RBCS, RBCF		
UNIT SIZE	STANDARD HOOD K	FILTERED HOOD K
18		
20		
24		
30		23.27
36	25.27	27.81
42	26.62	27.08
48	27.75	---

DAMPER/CURB TRAY (END)

12 GA. GALV. G90
12 GA. GVNL. A60

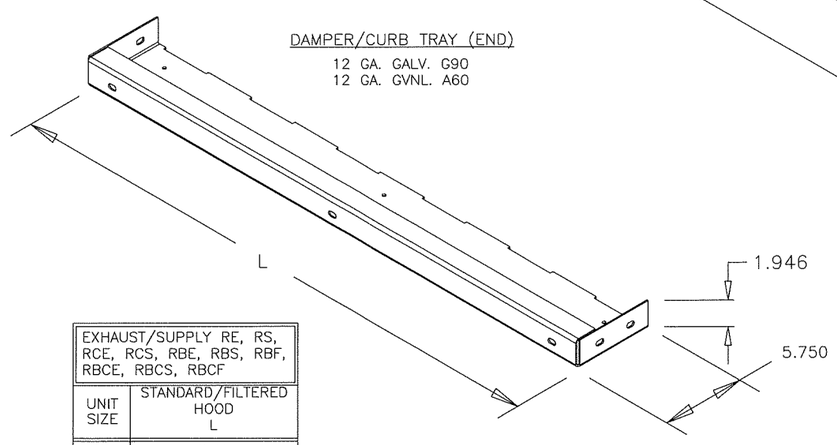

EXHAUST/SUPPLY RE, RS, RCE, RCS, RBE, RBS, RBF, RBCE, RBCS, RBCF	
UNIT SIZE	STANDARD/FILTERED HOOD L
18	16.11
20	18.11
24	22.11
30	28.11
36	34.11
42	40.11
48	46.11

DAMPER/CURB TRAY (SIDE)

12 GA. GALV. G90
12 GA. GVNL. A60

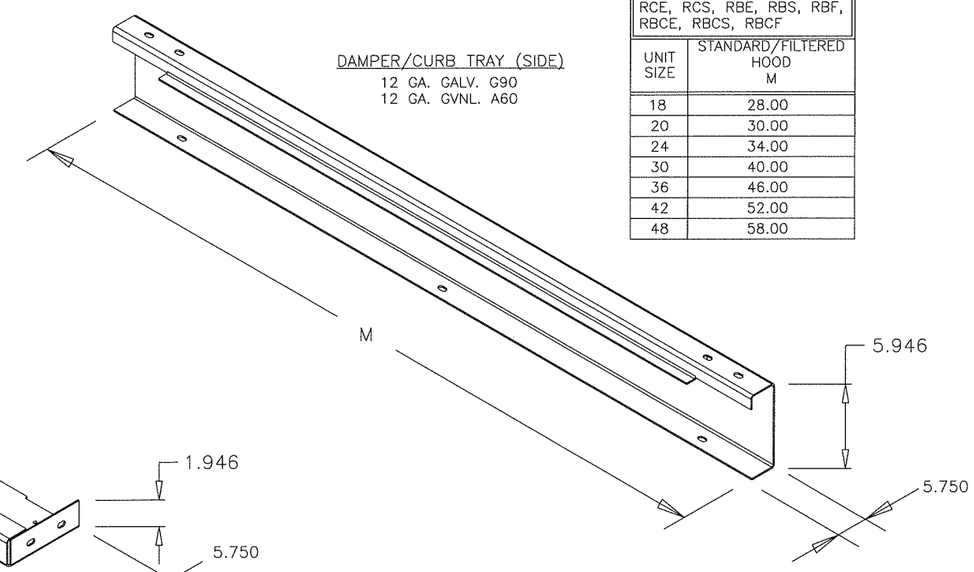

EXHAUST/SUPPLY RE, RS, RCE, RCS, RBE, RBS, RBF, RBCE, RBCS, RBCF	
UNIT SIZE	STANDARD/FILTERED HOOD M
18	28.00
20	30.00
24	34.00
30	40.00
36	46.00
42	52.00
48	58.00

PRODUCT REVISED
as complying with the Florida Building Code
NOA-No. 23-1122.03
Expiration Date 07/08/2029
By [signature]
Miami-Dade Product Control

ALL DIMENSIONS ARE IN INCHES

GREENHECK
P.O. BOX 410 SCHOFIELD, WISCONSIN 54476-0410

TITLE: R SERIES UNITS SHEET 4 OF 9

DRAWN BY | ECO
DATE: 5/22/2019
SUPERSEDES
SCALE: 1/4.5
CAD DRAWING NO.: HR2004
D

REVISION	DCR	BY	DATE	SYM
UPDATE SHEET NO. IN TITLE BLOCK		DFY	8/17 2022	1

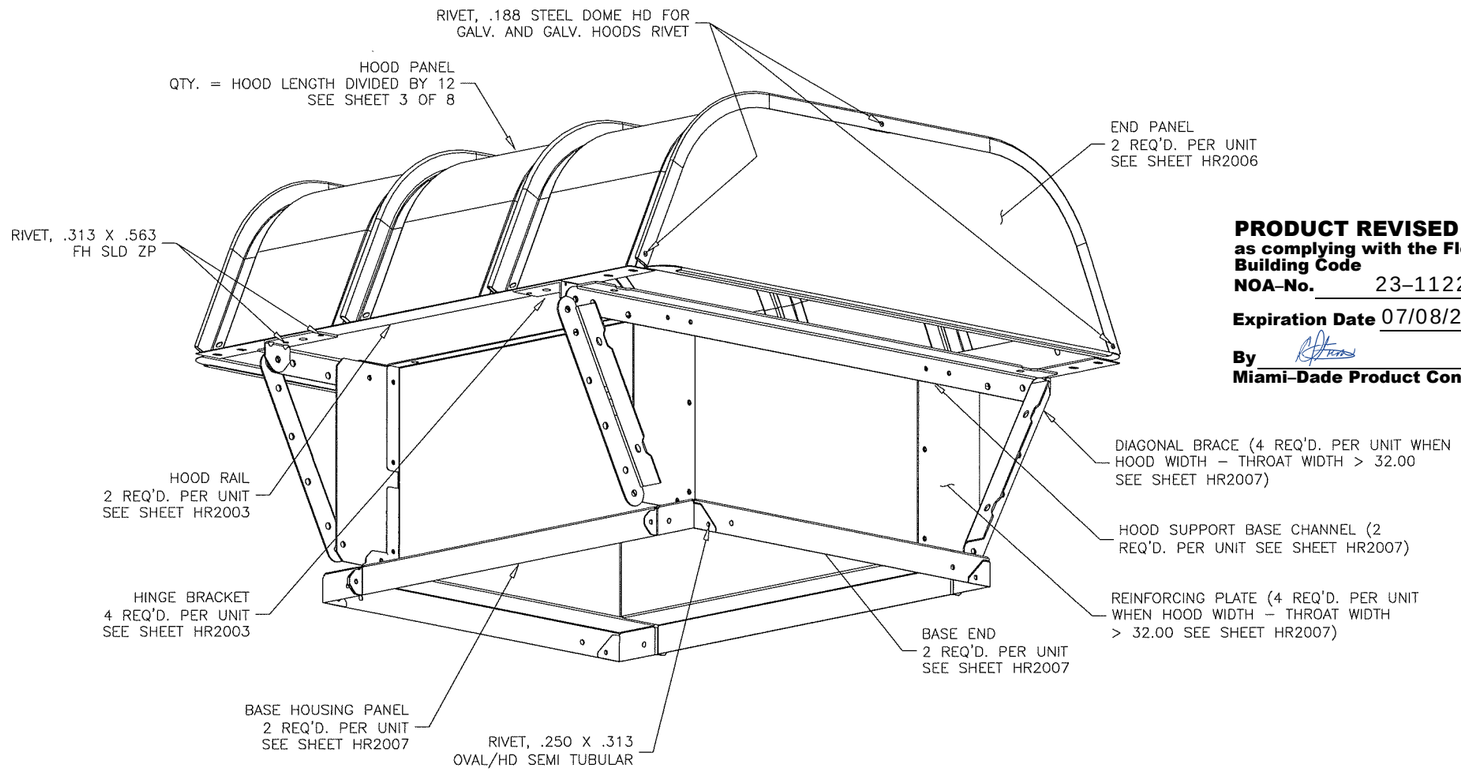

PRODUCT REVISED
as complying with the Florida Building Code
NOA-No. 23-1122.03
Expiration Date 07/08/2029
By
Miami-Dade Product Control

NOTES:

1. GALVANIZED INSTANCES OF MODELS FGI AND FGR HAVE BEEN SUCCESSFULLY TESTED IN ACCORDANCE WITH MIAMI–DADE TEST PROTOCOLS TAS–201 (LARGE MISSILE IMPACT), TAS–202 (STATIC LOADING), AND TAS–203 (CYCLIC WIND LOADING). ALUMINUM INSTANCES OF THE ABOVE STATED MODELS HAVE BEEN SUCCESSFULLY TESTED IN ACCORDANCE WITH MIAMI–DADE TEST PROTOCOLS TAS–202 (STATIC LOADING) AND TAS–203 (CYCLIC WIND LOADING).
2. ROOF STRUCTURE MUST BE DESIGNED TO WITHSTAND THE WEIGHT AND LOADING TRANSMITTED BY ROOF TOP FANS. FASTENERS SHALL BE AS SPECIFIED AND INSTALLED AS DETAILED.
3. DESIGN, TESTING, AND INSTALLATION CONFORMS TO FLORIDA BUILDING CODE.
4. DESIGN PRESSURES = ±70 PSF FOR STEEL (LARGE MISSILE IMPACT RESISTANT) AND ±40 PSF FOR ALUMINUM.
5. TESTED FOR AREAS INCLUDING HIGH VELOCITY HURRIANCE ZONES.
6. THESE FANS HAVE NOT BEEN TESTED FOR WIND–DRIVEN RAIN TESTING PER FLORIDA BUILDING CODE TAS–100(A)–95.
7. THIS APPROVAL IS FOR THE STRUCTURAL CAPACITY AND IMPACT RATING OF THE EXTERIOR HOUSING ONLY, IT DOES NOT INCLUDE ANY INTERIOR MECHANISM OR ELECTRICAL COMPONENTS.
8. FGI THROAT = MIN. 8.00x8.00 AND MAX. 54.00x54.00
   FGR THROAT = MIN. 8.00x8.00 AND MAX. 66.00x66.00

RICE
ENGINEERING
105 School Creek Trail
Luxemburg, WI 54217
Phone: (920) 617-1042
Fax: (920) 617-1100
www.rice-inc.com

Florida Firm No: F-01000005061
Certificate of Authorization: #9090
Wayne K. Helmila
Registration No: 59092

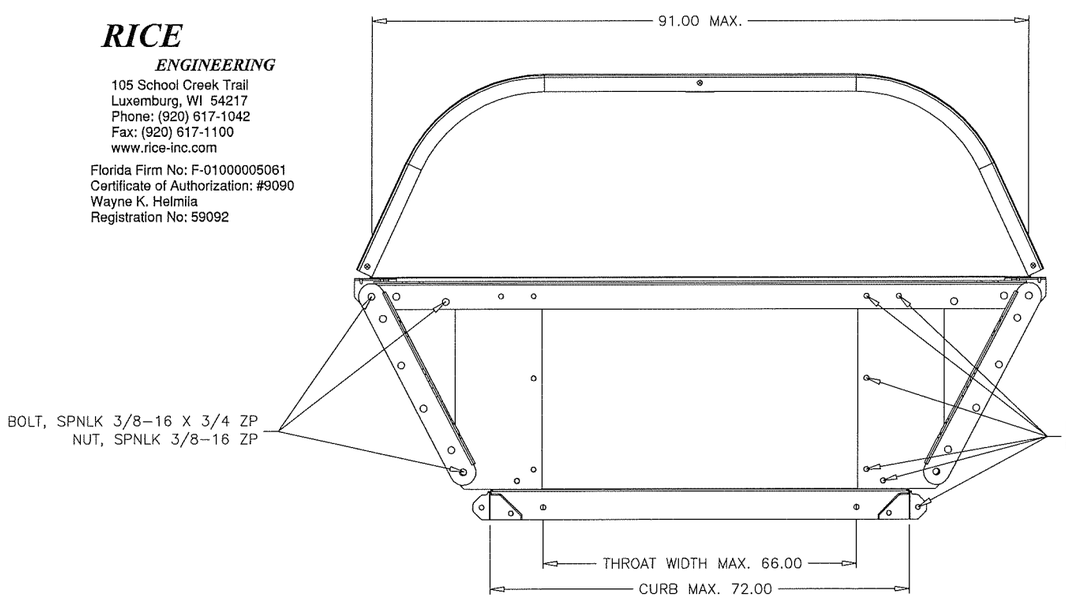

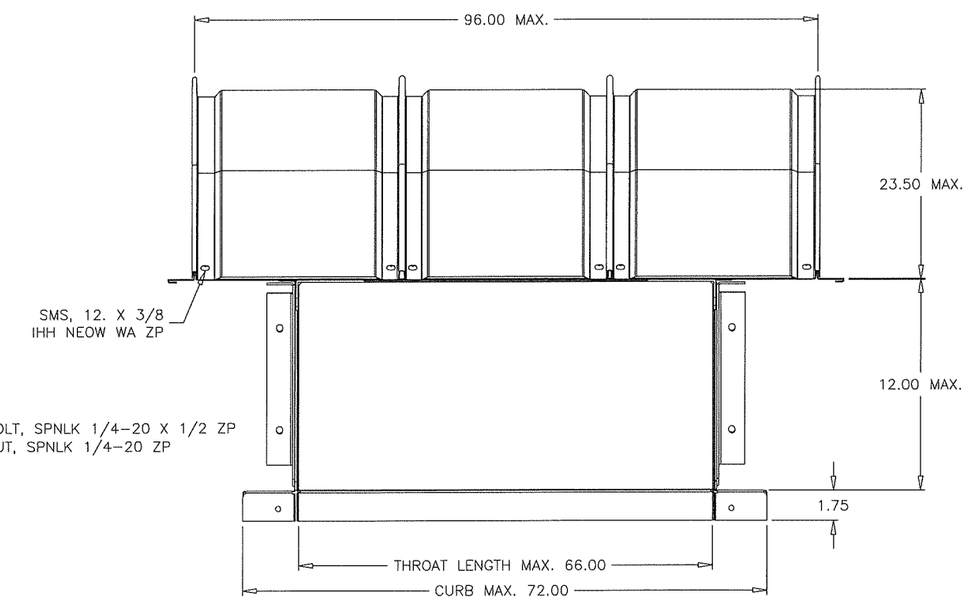

WAYNE K. HELMILA
LICENSE
No. 59092
STATE OF FLORIDA
PROFESSIONAL ENGINEER
OCT 2 3 2023

ALL DIMENSIONS ARE IN INCHES

GREENHECK P.O.BOX 410 SCHOFIELD, WISCONSIN 54476-0410	DRAWN BY YAKLOVICH	ECO
	DATE 02/03/2009	CHG. REF.
TITLE FGI & FGR SERIES SHEET 5 OF 9	SUPERSEDES	
	SCALE 1/4.5	
	CAD DRAWING NO. HR2005	D

REVISION	DCR	BY	DATE	SYM
UPDATE SHEET NO. IN TITLE BLOCK		DFY	8/17 2022	1

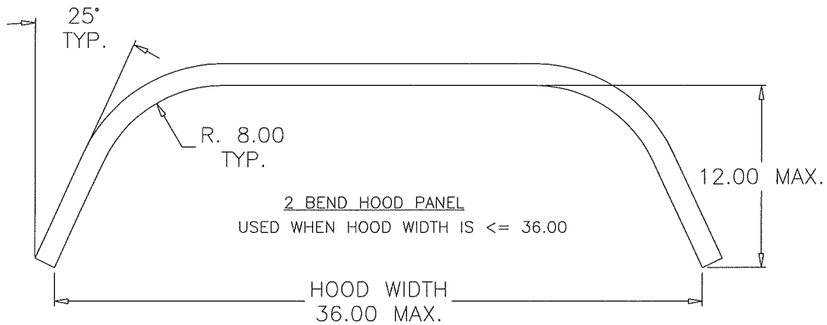

2 BEND HOOD PANEL
USED WHEN HOOD WIDTH IS <= 36.00

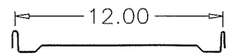

HOOD PANEL PROFILE

HOOD PANEL MATERIAL

22 GA. GALV. G90
22 GA. GVNL. A60
0.040 AL. 1100-H14

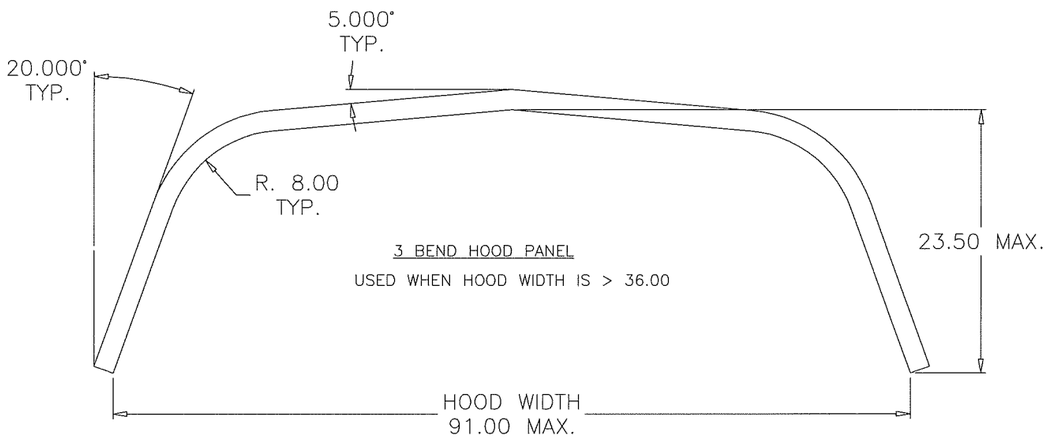

3 BEND HOOD PANEL
USED WHEN HOOD WIDTH IS > 36.00

HOOD PANEL

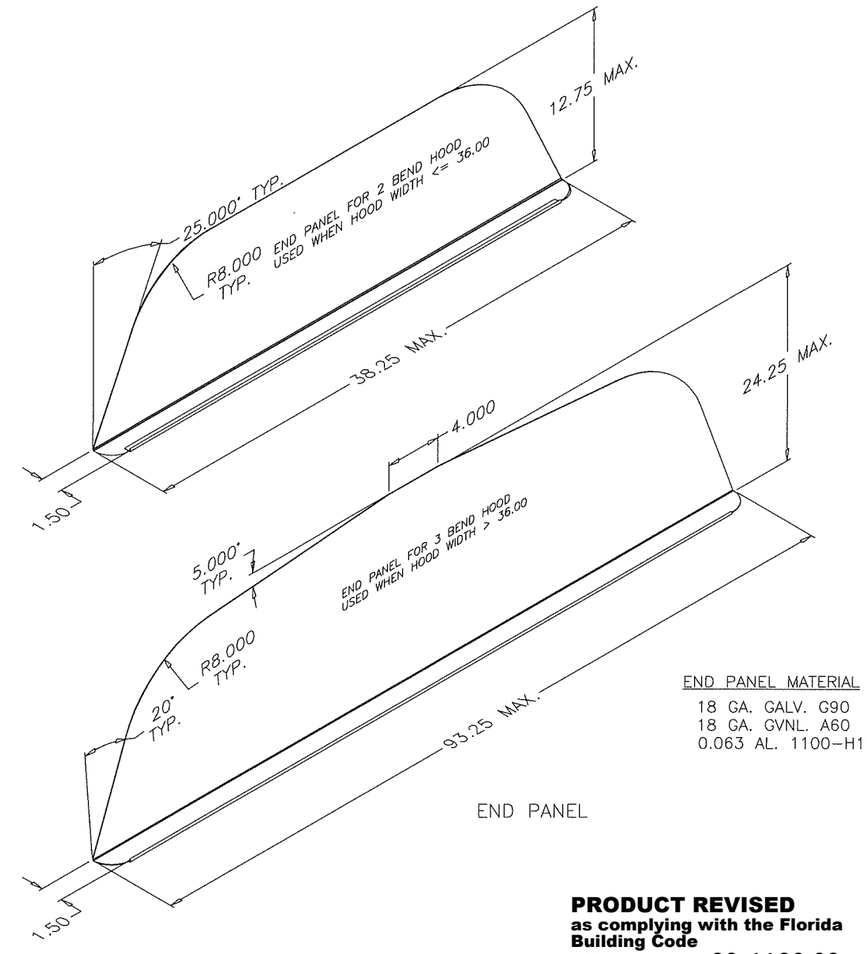

END PANEL MATERIAL

18 GA. GALV. G90
18 GA. GVNL. A60
0.063 AL. 1100-H14

END PANEL

RICE
ENGINEERING
105 School Creek Trail
Luxemburg, WI 54217
Phone: (920) 617-1042
Fax: (920) 617-1100
www.rice-inc.com

Florida Firm No: F-01000005061
Certificate of Authorization: #9090
Wayne K. Helmila
Registration No: 59092

PRODUCT REVISED
as complying with the Florida Building Code
NOA-No. 23-1122.03
Expiration Date 07/08/2029
By
Miami-Dade Product Control

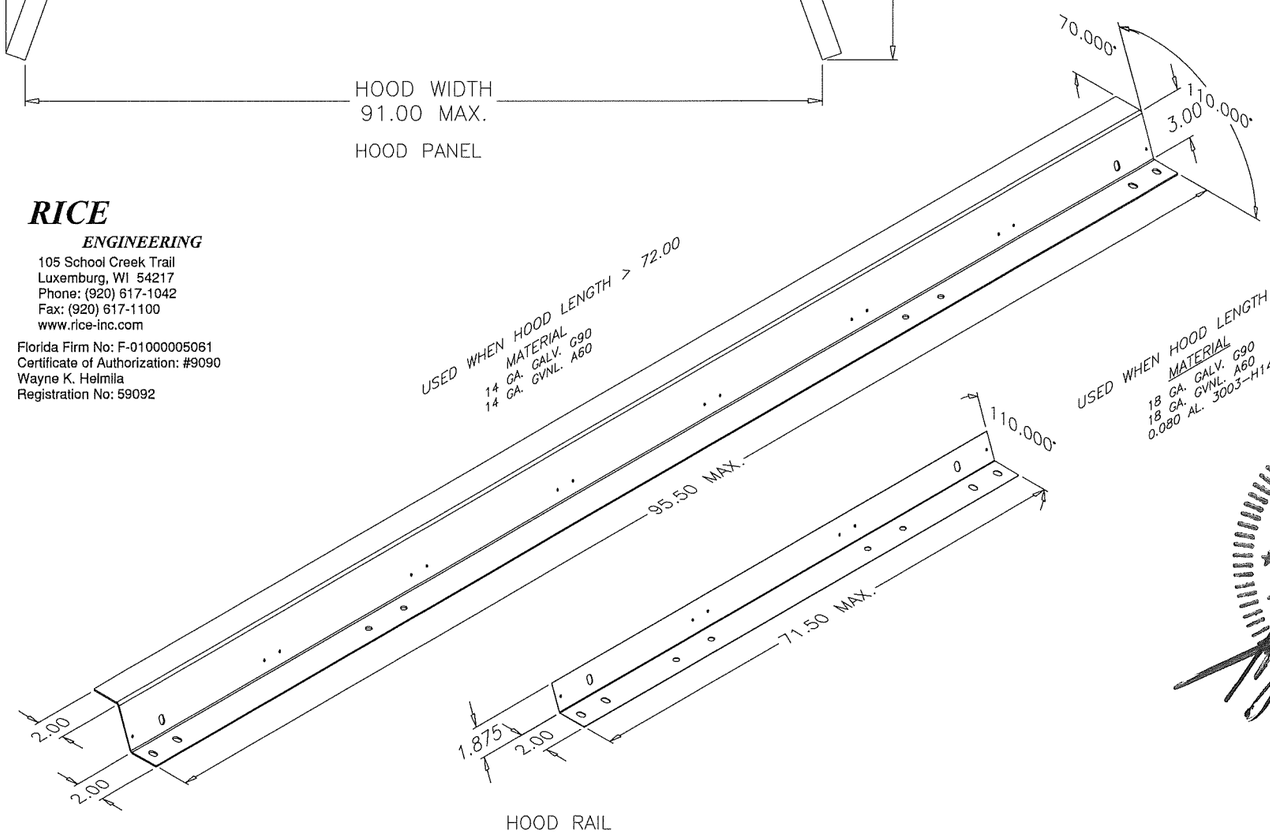

HOOD RAIL

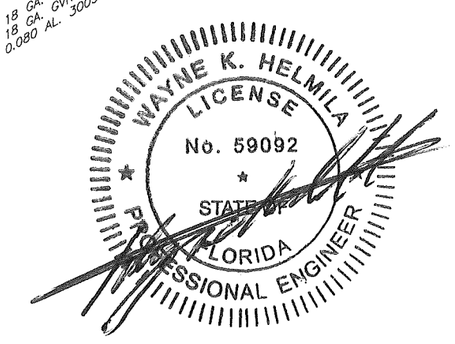

OCT 23 2023

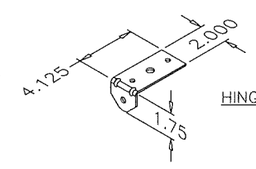

HINGE BRACKET MATERIAL

11 GA. GALV. G90

HINGE BRACKET

ALL DIMENSIONS ARE IN INCHES

GREENHECK P.O. BOX 410 SCHOFIELD, WISCONSIN 54476-0410	DRAWN BY YAKLOVICH	ECO
	DATE 02/03/2009	CHG. REF.
TITLE FGI & FGR SHEET 6 OF 9	SUPERSEDES	
	SCALE 1/4.5	
	CAD DRAWING NO. HR2006	D

REVISION	DCR	BY	DATE	SYM
UPDATE SHEET NO. IN TITLE BLOCK		DFY	8/17 2022	1

HOOD SUPPORT BASE CHANNEL

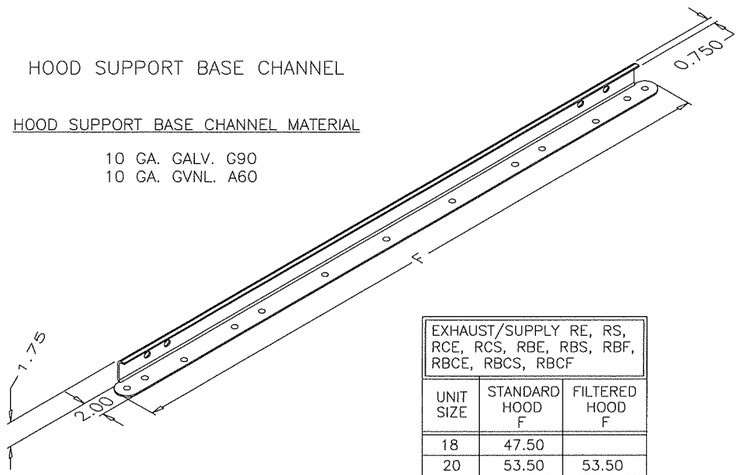

HOOD SUPPORT BASE CHANNEL MATERIAL

10 GA. GALV. G90
10 GA. GVNL. A60

EXHAUST/SUPPLY RE, RS, RCE, RCS, RBE, RBS, RBF, RBCE, RBCS, RBCF		
UNIT SIZE	STANDARD HOOD F	FILTERED HOOD F
18	47.50	
20	53.50	53.50
24	65.50	65.50
30	74.50	77.50
36	87.50	93.50
42	85.50	92.50
48	90.50	---

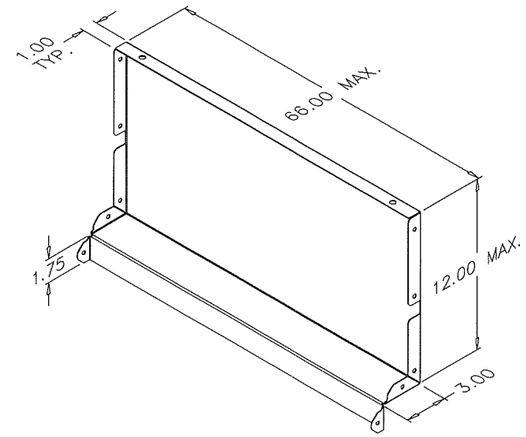

BASE HOUSING MATERIAL

18 GA. GALV. G90
16 GA. GVNL. A60
0.063 AL. 1100-H14

BASE SIDE

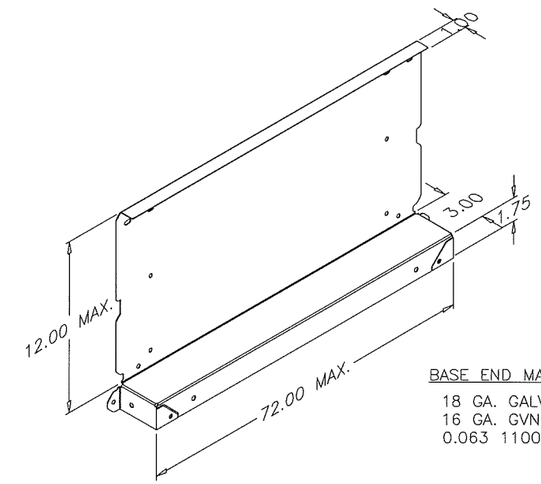

BASE END MATERIAL

18 GA. GALV. G90
16 GA. GVNL. A60
0.063 1100-H14

BASE END

DIAGONAL BRACE MATERIAL

10 GA. GALV. G90
10 GA. GVNL. A60

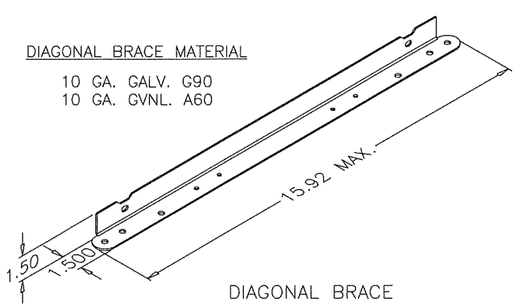

DIAGONAL BRACE

USED WHEN HOOD WIDTH – THROAT WIDTH > 32.00

RICE
ENGINEERING
105 School Creek Trail
Luxemburg, WI 54217
Phone: (920) 617-1042
Fax: (920) 617-1100
www.rice-inc.com

Florida Firm No: F-01000005061
Certificate of Authorization: #9090
Wayne K. Helmila
Registration No: 59092

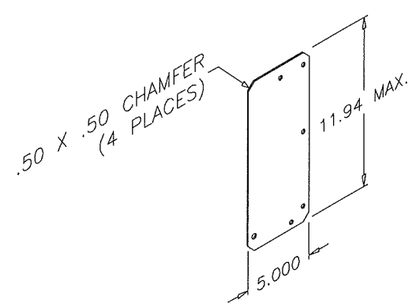

REINFFORCING PLATE MATERIAL

12 GA. GALV. G90
12 GA. GVNL. A60

REINFORCING PLATE

USED WHEN HOOD WIDTH – THROAT WIDTH > 32.00

WAYNE K. HELMILA
LICENSE
No. 59092
STATE OF FLORIDA
PROFESSIONAL ENGINEER

OCT 23 2023

PRODUCT REVISED
as complying with the Florida Building Code
NOA-No. 23-1122.03
Expiration Date 07/08/2029
By
Miami-Dade Product Control

ALL DIMENSIONS ARE IN INCHES

GREENHECK
P.O. BOX 410 SCHOFIELD, WISCONSIN 54476-0410

TITLE	FGI & FGR SHEET 7 OF 9
DRAWN BY	YAKLOVICH
DATE	02/05/2009
SUPERSEDES	
SCALE	1/4.5
CAD DRAWING NO.	HR2007
ECO	
ENG. REF.	
D	

REVISION	DCR	BY	DATE	SYM
UPDATED CHART FORMAT TO EXCEL		NAH	10/4 2023	5

- R-SERIES SHOWN BELOW. FGI/FGR MODELS ARE SIMILAR.
- SECTION CUTS SHOW MULTIPLE OPTIONS FOR ILLUSTRATIVE PURPOSES.
- DETAILS ARE NOT DRAWN TO SCALE.

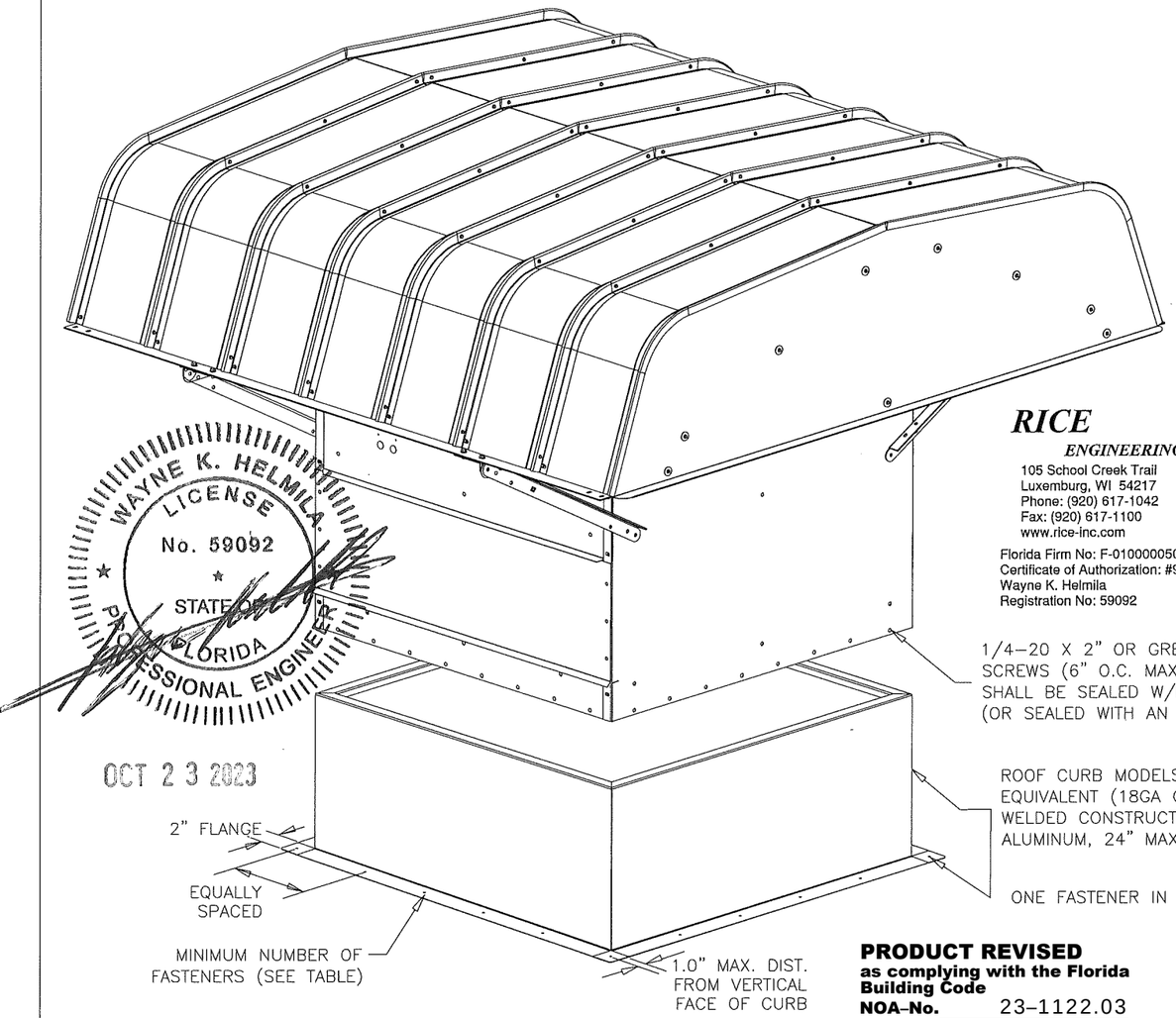

WAYNE K. HELMILA
LICENSE
No. 59092
STATE OF FLORIDA
PROFESSIONAL ENGINEER

OCT 23 2023

RICE
ENGINEERING
105 School Creek Trail
Luxemburg, WI 54217
Phone: (920) 617-1042
Fax: (920) 617-1100
www.rice-inc.com

Florida Firm No: F-01000005061
Certificate of Authorization: #9090
Wayne K. Helmila
Registration No: 59092

PRODUCT REVISED
as complying with the Florida Building Code
NOA-No. 23-1122.03
Expiration Date 07/08/2029
By
Miami-Dade Product Control

GALVANIZED — R-SERIES UNITS

UNIT SIZE	TIMBER: OPTION #1 (LAG SCREWS) PER SIDE (4)	TIMBER: OPTION #1 (LAG SCREWS) TOTAL (5)	TIMBER: OPTION #2 (THRU BOLTS) PER SIDE (4)	TIMBER: OPTION #2 (THRU BOLTS) TOTAL (5)	STEEL DECK: OPTION #3 (SELF-DRILL SCREWS) PER SIDE (4)	STEEL DECK: OPTION #3 (SELF-DRILL SCREWS) TOTAL (5)	STEEL DECK: OPTION #4 (THRU BOLTS) PER SIDE (4)	STEEL DECK: OPTION #4 (THRU BOLTS) TOTAL (5)	CONCRETE: OPTION #5 (SCREW ANCHORS) PER SIDE (4)	CONCRETE: OPTION #5 (SCREW ANCHORS) TOTAL (5)	CONCRETE: OPTION #6 (THRU BOLTS) PER SIDE (4)	CONCRETE: OPTION #6 (THRU BOLTS) TOTAL (5)
18	1	8	0	4	0	4	0	4	0	4	0	4
20	1	8	1	8	1	8	1	8	1	8	1	8
24	1	8	1	8	1	8	1	8	1	8	1	8
30	2	12	2	12	2	12	2	12	2	12	2	12
36	2	12	2	12	2	12	3	16	2	12	3	16
42	3	16	3	16	3	16	3	16	3	16	3	16
48	4	20	4	20	4	20	4	20	4	20	4	20

GALVANIZED — FGR

THROAT SIZE (A GIVEN SIDE)	TIMBER: OPTION #1 (LAG SCREWS) PER SIDE (4)	TIMBER: OPTION #1 (LAG SCREWS) TOTAL (5)	TIMBER: OPTION #2 (THRU BOLTS) PER SIDE (4)	TIMBER: OPTION #2 (THRU BOLTS) TOTAL (5)	STEEL DECK: OPTION #3 (SELF-DRILL SCREWS) PER SIDE (4)	STEEL DECK: OPTION #3 (SELF-DRILL SCREWS) TOTAL (5)	STEEL DECK: OPTION #4 (THRU BOLTS) PER SIDE (4)	STEEL DECK: OPTION #4 (THRU BOLTS) TOTAL (5)	CONCRETE: OPTION #5 (SCREW ANCHORS) PER SIDE (4)	CONCRETE: OPTION #5 (SCREW ANCHORS) TOTAL (5)	CONCRETE: OPTION #6 (THRU BOLTS) PER SIDE (4)	CONCRETE: OPTION #6 (THRU BOLTS) TOTAL (5)
FGI ≤24"	1	8	1	8	1	8	1	8	1	8	1	8
FGI ≤48"	2	12	2	12	3	16	2	12	2	12	2	12
FGI ≤54"	2	12	3	16	3	16	2	12	2	12	2	12
≤66"	2	12	3	16	4	20	2	12	2	12	2	12

TABLE NOTES:

1) UNLESS NOTED, ANCHORS ARE TO BE 300 SERIES S.S. COND. CW (Fy=65ksi MIN.) OR ZINC-PLATED GRADE-2 STEEL (Fy=57ksi MIN.). ZINC PLATED ANCHORS SHALL BE SEALED W/LIQUID PROSCO FLASHING (OR SEALED WITH AN EQUAL PRODUCT) UNLESS FLASHING CAN BE PROVIDED.
2) ALL ANCHORS TO BE INSTALLED PER THE MANUFACTURER RECOMMENDATIONS.
3) ALL ANCHOR SUBSTRATES BY OTHERS
4) CORNER FASTENERS ARE EXCLUDED FROM PER-SIDE QUANTITIES
5) EACH INSTALL TO UTILIZE FOUR (4) CORNER FASTENERS
6) TABULATED DATA GENERATED FROM 70psf FOR GALVANIZED (40psf FOR ALUMINUM); UPLIFT AND LATERAL LOADS APPLIED INDEPENDENTLY

NOTES:

1. GALVANIZED ROOF CURB SUCCESSFULLY TESTED IN ACCORDANCE WITH MIAMI-DADE TEST PROTOCOLS TAS-201 (LARGE MISSILE IMPACT), TAS-202 (STATIC LOADING), AND TAS-203 (CYCLIC WIND LOADING). ALUMINUM ROOF CURB SUCCESSFULLY TESTED IN ACCORDANCE WITH MIAMI-DADE TAS-202 (STATIC LOADING) AND TAS-203 (CYCLIC WIND LOADING).
2. ROOF STRUCTURE MUST BE DESIGNED TO WITHSTAND THE WEIGHT AND LOADING TRANSMITTED BY ROOF TOP FANS. FASTENERS SHALL BE SPECIFIED AND INSTALLED AS DETAILED.
3. DESIGN PRESSURE = ±70 PSF FOR STEEL (LARGE MISSILE IMPACT RESISTANT) AND ±40 PSF FOR ALUMINUM.
4. TESTED FOR AREAS INCLUDING HIGH VELOCITY HURRICANE ZONES.
5. AS WITH THE FANS, THE ROOF CURB HAS NOT BEEN TESTED FOR WIND-DRIVEN RAIN TESTING PER FLORIDA BUILDING CODE TAS-100(A)-95.

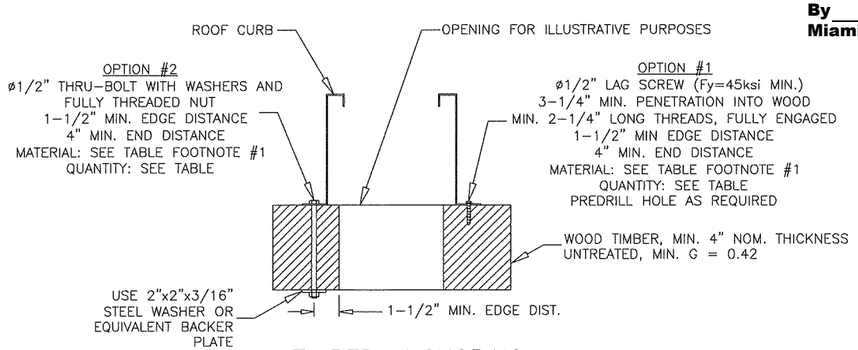

TIMBER ANCHORING

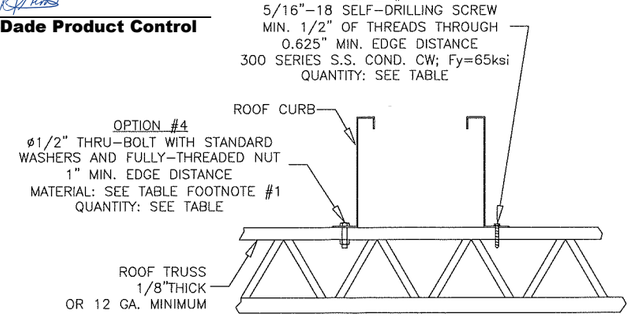

STEEL ANCHORING

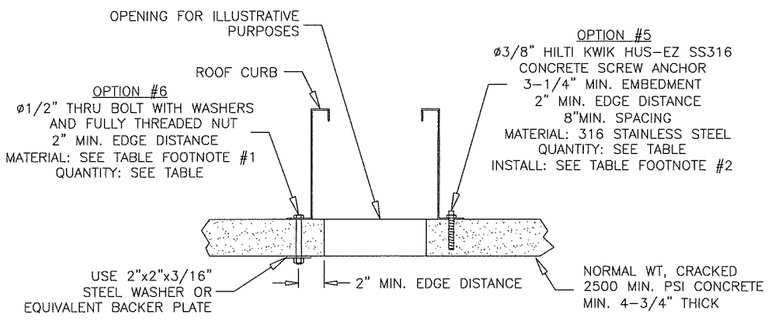

CONCRETE DECK ANCHORING

GREENHECK
P.O.BOX 410 SCHOFIELD, WISCONSIN 54476-0410

DRAWN BY	N. HINTZ
DATE	10/4/2023
SUPERSEDES	
SCALE	1/7.7
CAD DRAWING NO.	HR2008
CCO	
CHG. NO.	
D	

TITLE: R-SERIES, FGI/FGR CURB MOUNTING SHEET 8 OF 9

- R-SERIES SHOWN BELOW. FGI/FGR MODELS ARE SIMILAR.
- SECTION CUTS SHOW MULTIPLE OPTIONS FOR ILLUSTRATIVE PURPOSES.
- DETAILS ARE NOT DRAWN TO SCALE.

PRODUCT REVISED
as complying with the Florida Building Code
NOA-No. 23-1122.03
Expiration Date 07/08/2029
By
Miami-Dade Product Control

REVISION	DCR	BY	DATE	SYM
UPDATED CHART FORMAT TO EXCEL		NAH	10/9 2023	5

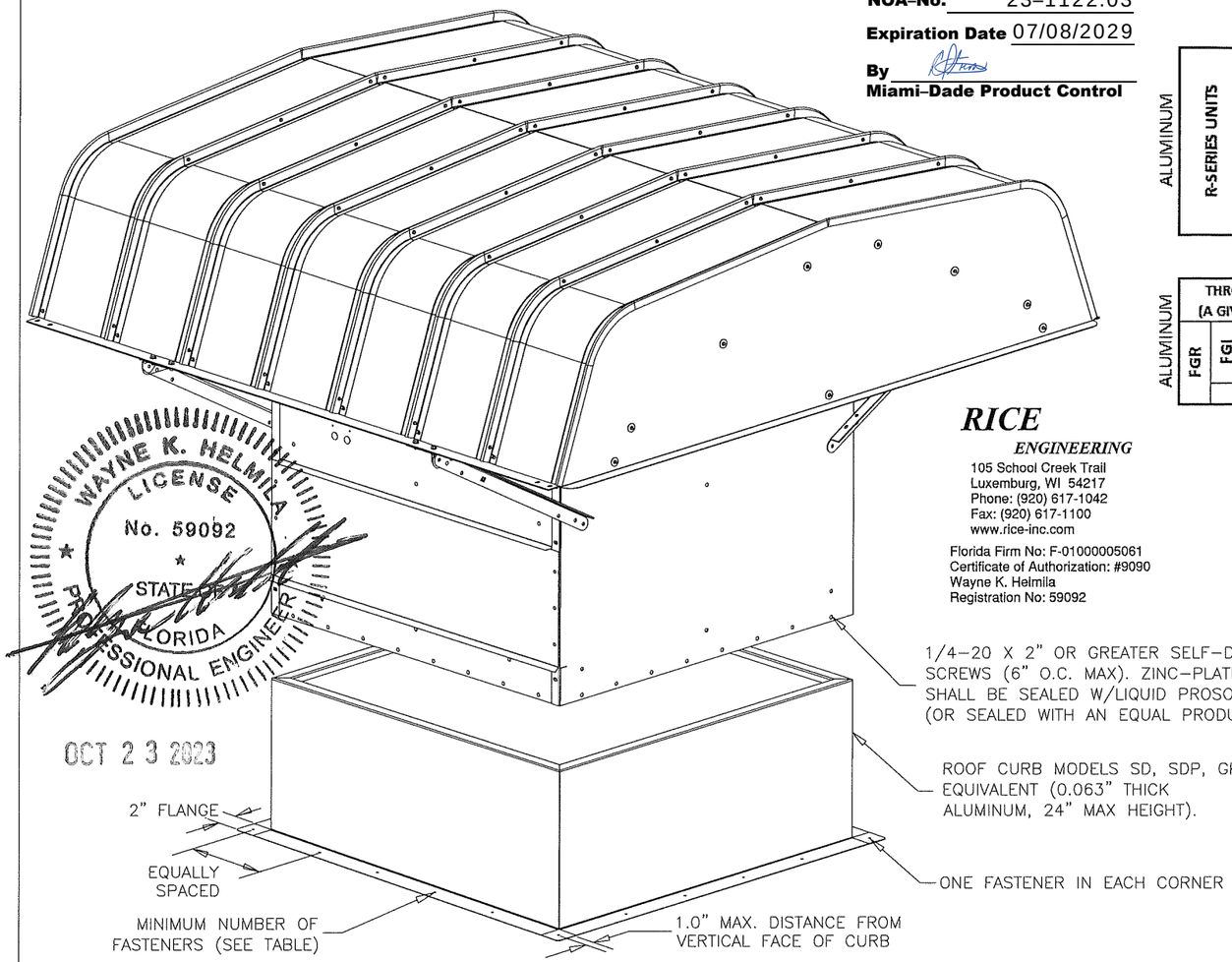

RICE
ENGINEERING
105 School Creek Trail
Luxemburg, WI 54217
Phone: (920) 617-1042
Fax: (920) 617-1100
www.rice-inc.com
Florida Firm No: F-01000005061
Certificate of Authorization: #9090
Wayne K. Helmila
Registration No: 59092

WAYNE K. HELMILA LICENSE No. 59092 STATE OF FLORIDA PROFESSIONAL ENGINEER

OCT 23 2023

ALUMINUM CURB-TO-DECK MOUNTING: SYSTEM MINIMUM NUMBER OF ANCHORS TO ATTACH CURB TO STRUCTURE

		TIMBER				STEEL DECK				CONCRETE			
	UNIT SIZE	OPTION #1 (LAG SCREWS)		OPTION #2 (THRU BOLTS)		OPTION #3 (SELF-DRILL SCREWS)		OPTION #4 (THRU BOLTS)		OPTION #5 (SCREW ANCHORS)		OPTION #6 (THRU BOLTS)	
		PER SIDE (4)	TOTAL (5)	PER SIDE (4)	TOTAL (5)	PER SIDE (4)	TOTAL (5)	PER SIDE (4)	TOTAL (5)	PER SIDE (4)	TOTAL (5)	PER SIDE (4)	TOTAL (5)
ALUMINUM R-SERIES UNITS	18	0	4	0	4	0	4	0	4	0	4	0	4
	20	0	4	0	4	0	4	0	4	0	4	0	4
	24	1	8	1	8	1	8	1	8	1	8	1	8
	30	1	8	1	8	1	8	1	8	1	8	1	8
	36	2	12	2	12	2	12	2	12	2	12	2	12
	42	2	12	2	12	2	12	2	12	2	12	2	12
	48	3	16	3	16	3	16	3	16	3	16	3	16

			TIMBER				STEEL DECK				CONCRETE			
	THROAT SIZE (A GIVEN SIDE)		OPTION #1 (LAG SCREWS)		OPTION #2 (THRU BOLTS)		OPTION #3 (SELF-DRILL SCREWS)		OPTION #4 (THRU BOLTS)		OPTION #5 (SCREW ANCHORS)		OPTION #6 (THRU BOLTS)	
			PER SIDE (4)	TOTAL (5)	PER SIDE (4)	TOTAL (5)	PER SIDE (4)	TOTAL (5)	PER SIDE (4)	TOTAL (5)	PER SIDE (4)	TOTAL (5)	PER SIDE (4)	TOTAL (5)
ALUMINUM FGR	FGI	≤24"	1	8	1	8	1	8	1	8	1	8	1	8
		≤48"	2	12	1	8	2	12	1	8	2	12	1	8
		≤54"	2	12	2	12	2	12	2	12	2	12	2	12
	≤66"		2	12	2	12	2	12	2	12	2	12	2	12

TABLE NOTES:

1) UNLESS NOTED, ANCHORS ARE TO BE 300 SERIES S.S. COND. CW (Fy=65ksi MIN.) OR ZINC-PLATED GRADE-2 STEEL (Fy=57ksi MIN.). ZINC PLATED ANCHORS SHALL BE SEALED W/LIQUID PROSCO FLASHING (OR SEALED WITH AN EQUAL PRODUCT) UNLESS FLASHING CAN BE PROVIDED.
2) ALL ANCHORS TO BE INSTALLED PER THE MANUFACTURER RECOMMENDATIONS.
3) ALL ANCHOR SUBSTRATES BY OTHERS
4) CORNER FASTENERS ARE EXCLUDED FROM PER-SIDE QUANTITIES
5) EACH INSTALL TO UTILIZE FOUR (4) CORNER FASTENERS
6) TABULATED DATA GENERATED FROM 70psf FOR GALVANIZED (40psf FOR ALUMINUM); UPLIFT AND LATERAL LOADS APPLIED INDEPENDENTLY

NOTES:

1. GALVANIZED ROOF CURB SUCCESSFULLY TESTED IN ACCORDANCE WITH MIAMI-DADE TEST PROTOCOLS TAS-201 (LARGE MISSILE IMPACT), TAS-202 (STATIC LOADING), AND TAS-203 (CYCLIC WIND LOADING). ALUMINUM ROOF CURB SUCCESSFULLY TESTED IN ACCORDANCE WITH MIAMI-DADE TAS-202 (STATIC LOADING) AND TAS-203 (CYCLIC WIND LOADING).
2. ROOF STRUCTURE MUST BE DESIGNED TO WITHSTAND THE WEIGHT AND LOADING TRANSMITTED BY ROOF TOP FANS. FASTENERS SHALL BE SPECIFIED AND INSTALLED AS DETAILED.
3. DESIGN PRESSURE = ±70 PSF FOR STEEL (LARGE MISSILE IMPACT RESISTANT) AND ±40 PSF FOR ALUMINUM.
4. TESTED FOR AREAS INCLUDING HIGH VELOCITY HURRICANE ZONES.
5. AS WITH THE FANS, THE ROOF CURB HAS NOT BEEN TESTED FOR WIND-DRIVEN RAIN TESTING PER FLORIDA BUILDING CODE TAS-100(A)-95.

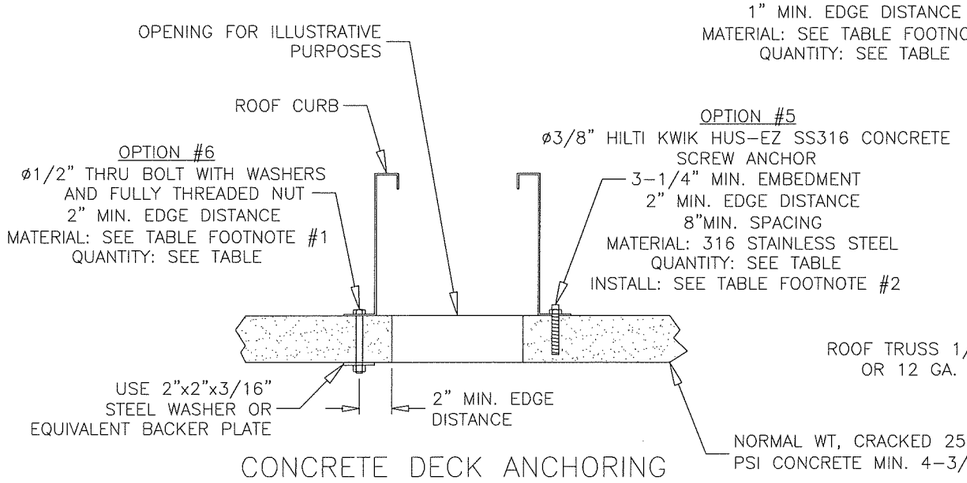

CONCRETE DECK ANCHORING

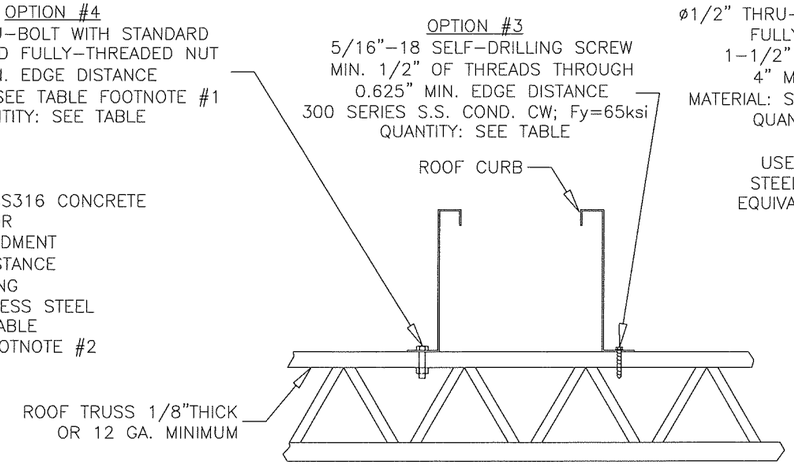

STEEL ANCHORING

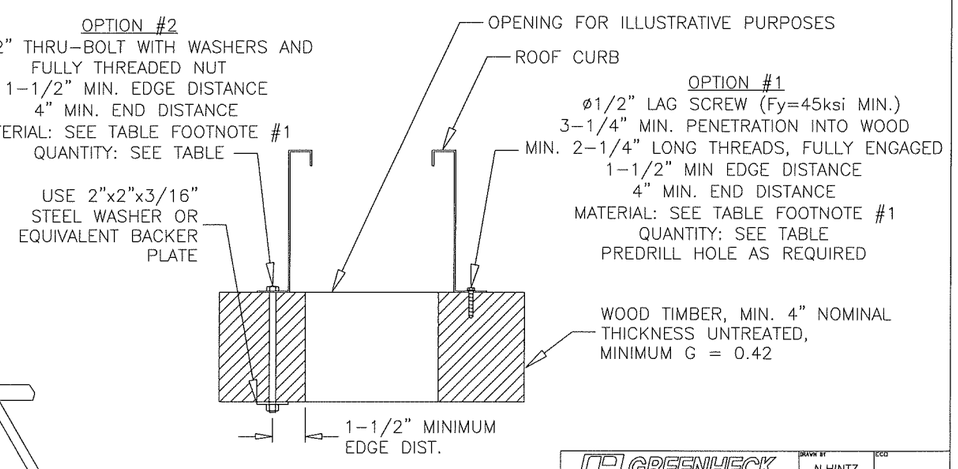

TIMBER ANCHORING

GREENHECK
P.O.BOX 410 SCHOFIELD, WISCONSIN 54476-0410

DRAWN BY N.HINTZ	CCO
DATE 10/9/2023	CHG. REF.
SUPERSEDES	
SCALE VARIES	
CAD DRAWING NO. HR2009	D

TITLE: R-SERIES, FGI/FGR CURB MOUNTING SHEET 9 OF 9