Evaluation Report

Stealth Off Ridge Vent
High Profile

Manufacturer:

Direct Metals, Inc. (DMI)
17600 East Street
N. Fort Myers, FL 33917
(239) 599-8527

For

Florida Product Approval
 # FL 41489.2 R1
Florida Building Code 8th Edition (2023)
Per Rule 61G20-3

Method:	**2 - B**
Category:	**Roofing**
Sub - Category:	**Roofing Accessories that are an Integral Part of the Roof System**

Product Name : **High Profile - Stealth ORV**
Support: Plywood *Deck*

This item has been digitally signed and sealed by James L. Buckner, P.E., on this date below. Printed copies of this document are not considered signed and sealed, and the signature must be verified on any electronic copies.

JAMES L. BUCKNER
LICENSE
No 31242
STATE OF FLORIDA
PROFESSIONAL ENGINEER

James L. Buckner, P.E.
FL31242

2023.12.26
16:29:54 -05'00'

Prepared by:
James L. Buckner, P.E., SECB
Florida Professional Engineer # 31242
Florida Evaluation ANE ID: 1916
Report No. 23-582.02_Hi_Stealth_ER
(Revises Report No. 21-448.02_Hi_Stealth_ER, FL41489.2 R0)
Date: 12/26/2023

Contents:
Evaluation Report Pages 1 – 5

Manufacturer:	**Direct Metals, Inc. (DMI)**
Product Name:	**High Profile Stealth Off Ridge Vent**
Product Category:	Roofing
Product Sub-Category	Roofing Accessories that are an Integral part of the Roofing System
Compliance Method:	State Product Approval Rule 61G20-3.005 (2) (b)
Product/System Description:	The Stealth Off Ridge Vent (ORV) - High Profile with diverter is designed for air flow. The Stealth ORV is to be installed with approved roof assembly.
Model:	High Profile
Product Assembly as Evaluated:	Refer to Page 4 of this report for product assembly components/materials & standards: 1. High Profile Stealth Off Ridge Vent 2. Fasteners Attached to Plywood Deck Support
Support:	**Type:** Wood Deck (Design of support system is outside the scope of this evaluation) **Description:** • 15/32" or greater Plywood, • or Wood plank deck (based on minimum density/specific gravity of 0.42)
Structural Rating:	33 Foot Mean Roof Height per FBC 8th-HVHZ Standard TAS 100(A)
Slope:	2 : 12 or greater

Performance Basis: The following test protocol was performed to demonstrate compliance with the intent of the code.
TAS-100(A) - HVHZ Testing Application Standard for wind resistance

Code Compliance: The product described herein has demonstrated compliance with:
Florida Building Code 8th Edition (2023), Section 1708.2

Evaluation Report Scope: This product evaluation is limited to compliance with the structural requirements of the Florida Building Code, as related to the scope section to Florida Product Approval Rule 61G20-3.001.

Limitations and Conditions of Use:

- The evaluation of this product is based on test standard with limit of use roof mean height of 33 feet. TAS100(A), section 11.1.2
- This product has been evaluated to roof slopes greater than or equal to 2 : 12, per TAS 100(A)
- Refer to applicable building code for ventilation requirements.
- <u>Scope of "Limitations and Conditions of Use" for this evaluation:</u>
  This evaluation report for "Optional Statewide Approval" contains technical documentation, specifications and installation method(s) which include "Limitations and Conditions of Use" throughout the report in accordance with Rule 61G20-3.005. Per Rule 61G20-3.004, the Florida Building Commission is the authority to approve products under "Optional Statewide Approval".
- <u>Option for application outside "Limitations and Conditions of Use"</u>
  Rule 61G20-3.005(1)(e) allows engineering analysis for "project specific approval by the local authorities having jurisdiction in accordance with the alternate methods and materials authorized in the Code". Any modification of the product as evaluated in this report and approved by the Florida Building Commission is outside the scope of this evaluation and will be the responsibility of others.
- Design of support system is outside the scope of this report.
- Fire Classification is outside the scope of Rule 61G20-3, and is therefore not included in this evaluation.
- This evaluation report only includes the High Velocity Hurricane Zone code section (Dade & Broward Counties) results from the TAS 100(A) test.

Quality Assurance:

The manufacturer has demonstrated compliance of roof panel products in accordance with the Florida Building Code and Rule 61G20-3.005 (3) for manufacturing under a quality assurance program audited by an approved quality assurance entity through **Keystone Certifications, Inc.**
(FBC Organization Number QUA1824)

Base Unit:

Material:	Heavy Duty Polypropylene Carbonate
Dimensions:	4.875" tall x 39" x 35" (triangular back shape)

Fastener:

Base Fastener:

Manufacturer:	Direct Metals Inc (DMI)
Type:	Pancake Head Screw
Size:	#10 × 1-1/2" (min.) DMI Panclip Fastener
Corrosion Resistance:	Per FBC Section 1506

Installation:

Installation Method:
(Refer to drawings on Page 5 of this report.)

Evaluation Referenced Data:

1. TAS 100(A) Test Procedure for Wind and Wind Driven Rain Resistance
   PRI Asphalt Technologies, Inc, FBC Organization Number TST1556
   Org Type Product Testing Laboratory
   Project No.: 2417T0003, Report Date: 11/ 11 / 21

2. Quality Assurance
   Keystone Certifications, Inc., FBC Organization Number QUA1824
   Org Type Product Quality Assurance Entity

3. Certification of Independence
   By James L. Buckner, P.E. @ CBUCK Engineering
   (FBC Organization # ANE 1916)

Installation Method
Direct Metal, Inc
High Profile Stealth Off Ridge Vent

Vent flange set in bed of ASTM D4586 roof cement
Diverter installed atop the front flange, fasteners placed 4 in o.c.

Stealth Off Ridge Vent

INSTALLATION:

FASTENERS: #10-9 DMI PANCLIP FASTENERS
#10-9 X 1" MINIMUM OR
3/16" MINIMUM PENETRATION THRU DECK

FASTENERS 5" O.C. 1-1/2" IN FROM THE EDGE OF THE PRODUCT
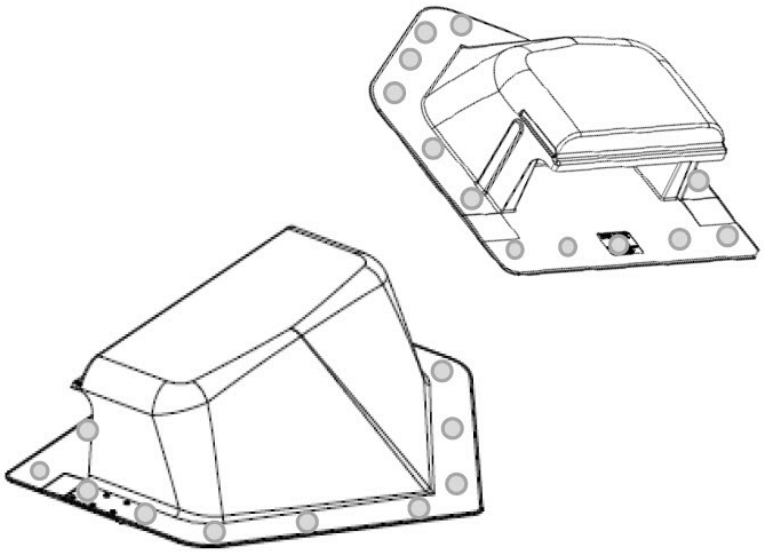
REPRESENTS FASTENER