EVALUATION REPORT OF
UNION CORRUGATING COMPANY
'NOM 0.032" THICK ALUMINUM ML200 PANEL'

FLORIDA BUILDING CODE 7TH EDITION (2020)
FLORIDA PRODUCT APPROVAL
FL 30502.1-R1
ROOFING
METAL ROOFING

Prepared For:
Union Corrugating Company
701 S. King St.
Fayetteville, NC 28301
Telephone: (910) 483-0479
Fax: (910) 483-1091

Prepared By:
Bala Sockalingam, Ph.D., P.E.
Florida Professional Engineer #62240
1216 N Lansing Ave., Suite C
Tulsa, OK 74106
Telephone: (918) 492-5992
FAX: (866) 366-1543

This report consists of
Evaluation Report (2 Pages including cover)
Installation Details (1 Page)
Load Span Table (1 Page)

Report No. C2407-4
Date: 10.13.2020

BALA SOCKALINGAM
LICENSE
No 62240
STATE OF FLORIDA
PROFESSIONAL ENGINEER

10.13.2020

Manufacturer:	Union Corrugating Company
Product Name:	ML200
Panel Description:	Standing seam panel with max. 18.25" wide coverage with 2" high ribs and double lock seam.
Materials:	Nom. 0.032" thick (min.) 3105-H14 Alloy (ASTM B209) as per FBC 2020 Section 1507.4.3.
Deck Description:	Min. 15/32" thick APA rated plywood or min. ¾" thick wood plank (min SG of 0.42) for new and existing constructions. Designed by others and installed as per FBC 2020.
Underlayment:	Minimum underlayment as per FBC 2020 Section 1507.4.5.1.
Slope:	1/4:12 or greater in accordance with FBC 2020 Section 1507.4.2
Design Uplift Pressure: (Factor of Safety = 2)	63.5 psf at clip spacing of 24" o.c. 146.4 psf at clip spacing of 6" o.c.
Panel Attachment:	4.3" long ML200 sliding clip or 3.25" long ML200 fixed clip with (2) #10-13 x 1.5" long pancake head wood screws per clip. Clips and fasteners are corrosion resistant as per FBC 2020 Section 1506.7 and 1507.4.4, respectively.
Test Standards:	Roof assembly tested in accordance with TAS 125-03 'Standard Requirements for Metal Roofing Systems'.
Code Compliance:	The product described herein has demonstrated compliance with FBC 2020 Section 1507.4.
Product Limitations:	Design wind loads shall be determined for each project in accordance with FBC 2020 Section 1609 or ASCE 7-16 using allowable stress design. Maximum clip spacing listed herein shall not be exceeded. The design pressure for reduced clip spacing may be computed using rational analysis prepared by a Florida Professional Engineer or based on Union load span table. This product is not approved for use in the High Velocity Hurricane Zone. Fire classification is not within scope of this Evaluation Report. Refer to FBC 2020 Section 1505 and current approved roofing materials directory or ASTM E108/UL790 report from an accredited laboratory for fire ratings of this product.
Supporting Documents:	TAS 125 Test Report Farabaugh Engineering and Testing Inc. Project No. T222-19, Reporting Date 8/2/19

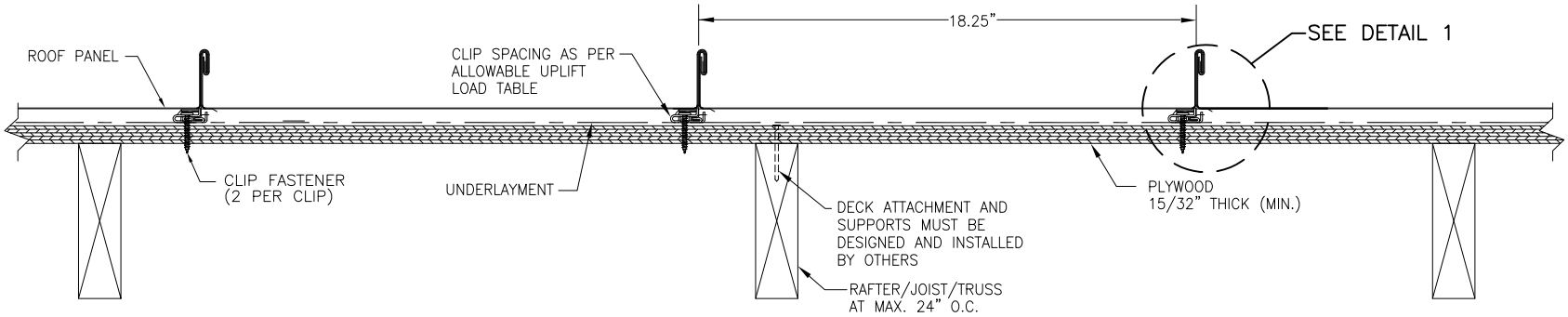

TYPICAL PANEL INSTALLATION X–SECTION

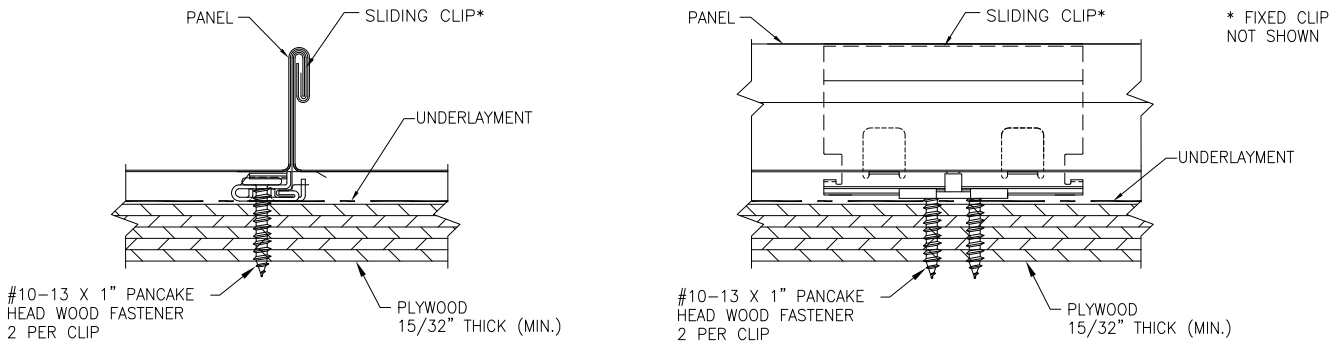

DETAIL 1

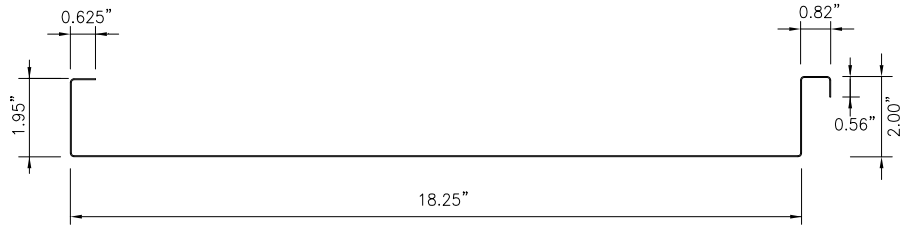

PANEL SECTION
(0.032" THICK ALUMINUM)

GENERAL NOTES:

1. ARCHITECTURAL STANDING SEAM ROOF PANEL HAS BEEN DESIGNED IN ACCORDANCE WITH THE FLORIDA BUILDING CODE (FBC).
2. ROOF PANELS ARE SHALL BE NOM. 0.032" THICK (MIN.) ALUMINUM. EFFECTIVE COVERING WIDTH OF PANEL = 18.25".
3. THE ROOF PANELS SHALL BE INSTALLED OVER STRUCTURE AS SPECIFIED ON THIS DRAWING.
4. REQUIRED DESIGN WIND LOADS SHALL BE DETERMINED FOR EACH PROJECT. THIS PANEL SYSTEM MAY NOT BE INSTALLED WHEN THE REQUIRED DESIGN WIND LOADS ARE GREATER THAN THE ALLOWABLE WIND LOAD TABLE.
5. CLIPS AND FASTENERS MUST BE IN ACCORDANCE WITH THIS DRAWING & FLORIDA BUILDING CODE. IF A DIFFERENCE OCCURS BETWEEN THE MINIMUM REQUIREMENTS OF THIS DRAWING & THE CODE, THE CODE SHALL CONTROL.
6. DECK AND SUPPORTS MUST BE DESIGNED TO WITHSTAND WIND LOADS AS REQUIRED FOR EACH APPLICATION AND ARE THE RESPONSIBILITY OF OTHERS.

DRAWN BY: B.S.	CHECKED BY: J.S.
PLOT:	DATE: 10/14/19

NO.	REVISION DESCRIPTION	BY	DATE

DRAWING TITLE
ML200 STANDING SEAM ALUMINUM ROOF PANEL

MANUFACTURER
UNION CORRUGATING COMPANY
P.O. BOX 229
FAYETTEVILLE, NC 28302
910–483–0479

CONSULTANTS
BALA SOCKALINGAM, PH.D., P.E.
1216 N LANSING AVE, SUITE C
TULSA, OK 74106
PHONE: 918–492–5992 FAX: 866–366–1543

DRAWING NO. 2407–4 REV.

PAGE NO. 1 OF 1

UNION CORRUGATING COMPANY
ML200 Panel Uplift Loads
(Nom. 0.032" Aluminum)

Description	Clip Spacing Along Panel Length (in)	Allowable Uplift Load (psf)
Max Coverage width: 18.25"	**6**	**146.4**
Seam: 180°	8	137.2
ML200 sliding clip	10	128.0
4.3" long, 22 ga. clip tab	12	118.8
2" long, 16 ga. clip base	14	108.9
Or ML200 Fixed clip	16	95.3
3.25" long, 22 ga.	18	84.7
Clip Fasteners:	20	76.2
(2) #10-13 x 1.5" long pancake	22	69.3
head screws	**24**	**63.5**

Notes:

1. The bold numbers indicate design loads calculated from test data with safety factor of 2.
2. Panels must be installed as per Evaluation Report FL 30502.1 and Union current installation procedure.

BALA SOCKALINGAM
LICENSE
No 62240
STATE OF FLORIDA
PROFESSIONAL ENGINEER

10.13.2020

1216 N Lansing Ave., Suite C
Tulsa, Ok 74106
918 492 5992

Bala Sockalingam, Ph.D., P.E.
FL 62240