EVALUATION REPORT OF
UNION CORRUGATING COMPANY
'NOM 0.032" THICK ALUMINUM SL175 PANEL'

FLORIDA BUILDING CODE 7TH EDITION (2020)
FLORIDA PRODUCT APPROVAL
FL 29467.4-R1
ROOFING
METAL ROOFING

Prepared For:
Union Corrugating Company
701 S. King St.
Fayetteville, NC 28301
Telephone: (910) 483-0479
Fax: (910) 483-1091

Prepared By:
Bala Sockalingam, Ph.D., P.E.
Florida Professional Engineer #62240
1216 N Lansing Ave., Suite C
Tulsa, OK 74106
Telephone: (918) 492-5992
FAX: (866) 366-1543

This report consists of
Evaluation Report (3 Pages including cover)
Installation Details (1 Page)

Report No. C2402-4
Date: 10.9.2020

BALA SOCKALINGAM
LICENSE
No 62240
STATE OF FLORIDA
PROFESSIONAL ENGINEER

10.9.2020

Manufacturer:	Union Corrugating Company
Product Name:	SL175
Panel Description:	Standing seam panel with max. 18" wide coverage, 1.75" high ribs and snap lock seam.
Materials:	Nom. 0.032" thick (min.) 3105-H14 Alloy (ASTM B209) as per FBC 2020 Section 1507.4.3.
Deck Description:	Min. 15/32" thick APA rated plywood or min. ¾" thick wood plank (min SG of 0.42) for new and existing constructions. Designed by others and installed as per FBC 2020.
Underlayment:	Minimum underlayment as per FBC 2020 Section 1507.4.5.1.
Slope:	1/4:12 or greater in accordance with FBC 2020 Section 1507.4.2
Design Uplift Pressure:	93.5 psf at clip spacing of 24" o.c.
Panel Attachment:	18 ga., 3.5" long SL175 clip with (2) #10-13 x 1" long pancake head wood screws per clip through underlayment into deck. Fastener shall be of sufficient length to penetrate through the deck a minimum of 1/4". Clips and fasteners are corrosion resistant as per FBC 2020 Section 1506.7 and 1507.4.4, respectively.
Test Standards:	Roof assembly tested in accordance with UL580-06 'Uplift Resistance of Roof Assemblies' & UL1897-15 'Uplift Tests for Roof Covering Systems'.
Test Equivalency:	The test procedure in UL 1897-15 comply with test procedures prescribed in UL 1897-12.
Code Compliance:	The product described herein has demonstrated compliance with FBC 2020 Section 1507.4.
Product Limitations:	Design wind loads shall be determined for each project in accordance with FBC 2020 Section 1609 or ASCE 7-16 using allowable stress design. Maximum clip spacing listed herein shall not be exceeded. The design pressure for reduced clip spacing may be computed using rational analysis prepared by a Florida Professional Engineer. This product is not approved for use in the High Velocity Hurricane Zone. Fire classification is not within scope of this Evaluation Report. Refer to FBC 2020 Section 1505 and current approved roofing materials directory or ASTM E108/UL790 report from an accredited laboratory for fire ratings of this product.

Supporting Documents: UL580 & UL1897 Test Reports
Intertek B&C
Project No. J8331.01-450-44 R0, Reporting Date 10/15/19

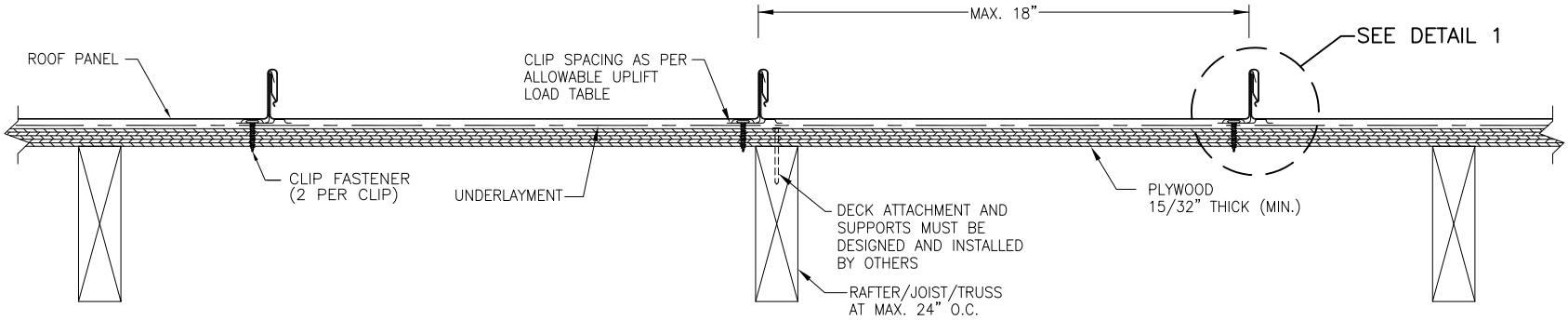

TYPICAL PANEL INSTALLATION X–SECTION

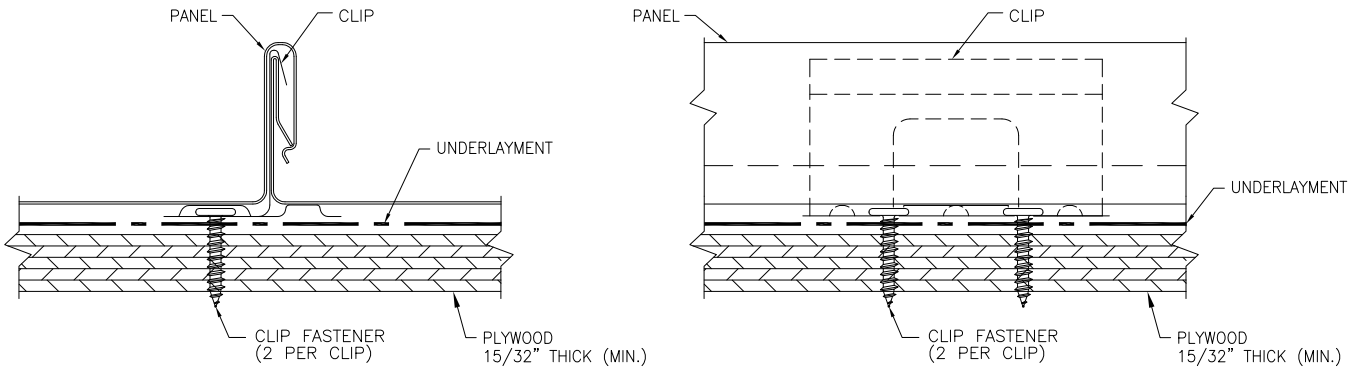

DETAIL 1

ALLOWABLE UPLIFT PRESSURE

CLIP SPACING (IN)	PRESSURE (PSF)
24	93.5

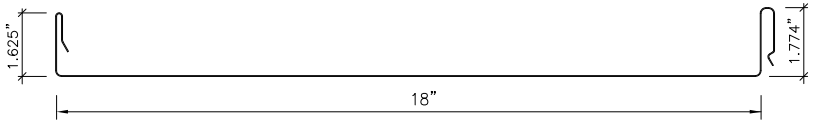

PANEL SECTION
(0.032" THICK ALUMINUM)

GENERAL NOTES:

1. ARCHITECTURAL STANDING SEAM ROOF PANEL HAS BEEN DESIGNED IN ACCORDANCE WITH THE FLORIDA BUILDING CODE (FBC).
2. ROOF PANELS ARE SHALL BE NOM. 0.032" THICK (MIN.) ALUMINUM. MAX. EFFECTIVE COVERING WIDTH OF PANEL = 18".
3. THE ROOF PANELS SHALL BE INSTALLED OVER STRUCTURE AS SPECIFIED ON THIS DRAWING.
4. REQUIRED DESIGN WIND LOADS SHALL BE DETERMINED FOR EACH PROJECT. THIS PANEL SYSTEM MAY NOT BE INSTALLED WHEN THE REQUIRED DESIGN WIND LOADS ARE GREATER THAN THE ALLOWABLE WIND LOAD TABLE.
5. CLIPS AND FASTENERS MUST BE IN ACCORDANCE WITH THIS DRAWING & FLORIDA BUILDING CODE. IF A DIFFERENCE OCCURS BETWEEN THE MINIMUM REQUIREMENTS OF THIS DRAWING & THE CODE, THE CODE SHALL CONTROL.
6. DECK AND SUPPORTS MUST BE DESIGNED TO WITHSTAND WIND LOADS AS REQUIRED FOR EACH APPLICATION AND ARE THE RESPONSIBILITY OF OTHERS.

DRAWN BY: B.S. | CHECKED BY: R.B.
PLOT: | DATE: 10/7/20

NO.	REVISION DESCRIPTION	BY	DATE

DRAWING TITLE: SL175 STANDING SEAM ALUMINUM ROOF PANEL

MANUFACTURER
UNION CORRUGATING COMPANY
P.O. BOX 229
FAYETTEVILLE, NC 28302
910-483-0479

CONSULTANTS
BALA SOCKALINGAM, PH.D., P.E.
1216 N LANSING AVE, SUITE C
TULSA, OK 74106
PHONE: 918-492-5992 FAX: 866-366-1543

DRAWING NO. D2402-4 | REV.