EVALUATION REPORT OF
UNION CORRUGATING COMPANY
'26 GA. 7/8" CORRUGATED PANEL'

FLORIDA BUILDING CODE 7TH EDITION (2020)
FLORIDA PRODUCT APPROVAL
FL 29467.1-R1
ROOFING
METAL ROOFING

Prepared For:
Union Corrugating Company
701 S. King St.
Fayetteville, NC 28301
Telephone: (910) 483-0479
Fax: (910) 483-1091

Prepared By:
Bala Sockalingam, Ph.D., P.E.
Florida Professional Engineer #62240
1216 N Lansing Ave., Suite C
Tulsa, OK 74106
Telephone: (918) 492-5992
FAX: (866) 366-1543

This report consists of
Evaluation Report (3 Pages including cover)
Installation Details (1 Page)
Load Span Table (1 Page)

BALA SOCKALINGAM
LICENSE
No 62240
STATE OF
FLORIDA
PROFESSIONAL ENGINEER

10.9.2020

Report No. C2402-1
Date: 10.9.2020

Manufacturer:	Union Corrugating Company
Product Name:	7/8" Corrugated Panel
Panel Description:	(13) 7/8" high ribs spaced at 2.67" o.c. with coverage width of 29.33"
Materials:	Minimum 26 ga., 50 ksi steel. Galvanized coated steel (ASTM A653) or Galvalume coated steel (ASTM A792) or painted steel (ASTM A755). Corrosion resistant as per FBC 2020 Section 1507.4.3.
Deck Description:	Min. 7/16" thick OSB or min. 15/32" thick APA rated plywood or min. ¾" thick wood plank (min SG of 0.42) for new and existing constructions. Designed by others and installed as per FBC 2020.
New Underlayment:	Minimum underlayment as per FBC 2020 Section 1507.4.5.1. Required for new construction.
Existing Underlayment: (Optional)	One layer of asphalt shingles over one layer of #30 felt. For reroofing construction only.
Slope:	1/2:12 or greater in accordance with FBC 2020 Section 1507.4.2.
Design Uplift Pressure: (Factor of Safety = 2)	41.6 psf @ fastener spacing of 24" o.c. 115.2 psf @ fastener spacing of 8" o.c.
Panel Attachment:	#10-14 wood screw with washer at max 8" o.c. across panel width through panel ridge or valley at all locations. Fasteners are corrosion resistant as per FBC 2020 Section 1507.4.4. For new construction, minimum fastener length through ridge is 2" and through valley is 1.5". For existing construction, fastener shall be of sufficient length to penetrate through the deck a minimum of 3/8".
Test Standards:	Roof assembly tested in accordance with TAS 125-03 'Standard Requirements for Metal Roofing Systems'.
Code Compliance:	The product described herein has demonstrated compliance with FBC 2020 Section 1507.4.
Product Limitations:	Design wind loads shall be determined for each project in accordance with FBC 2020 Section 1609 or ASCE 7-16 using allowable stress design. The maximum fastener spacing listed herein shall not be exceeded. The design pressure for reduced fastener spacing may be computed using rational analysis prepared by a Florida Professional Engineer or based on Union load span table. This evaluation report is not applicable in High Velocity Hurricane Zone. Fire classification is

not within scope of this Evaluation Report. Refer to FBC 2020 Section 1505 and current approved roofing materials directory or ASTM E108/UL790 report from an accredited laboratory for fire ratings of this product.

Supporting Documents: TAS 125-03 Test Report
Farabaugh Engineering and Testing Inc.
Project No. T165-19, Reporting Date 4/17/19

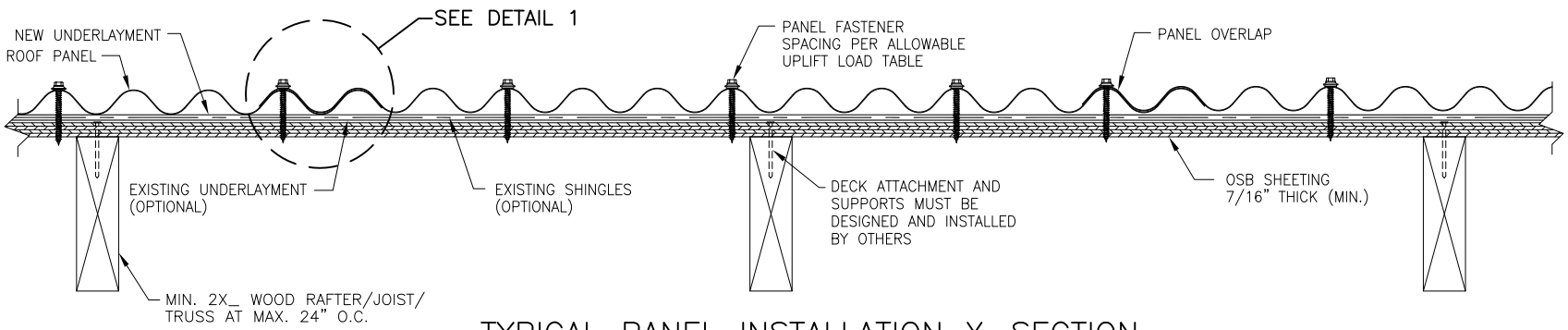

TYPICAL PANEL INSTALLATION X–SECTION

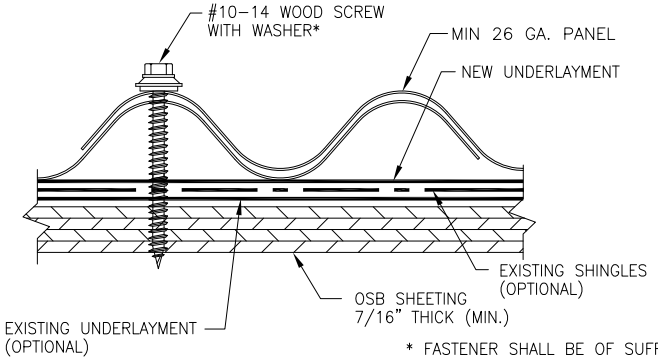

DETAIL 1

* FASTENER SHALL BE OF SUFFICIENT LENGTH TO PENETRATE THROUGH THE DECK A MINIMUM OF 3/8".

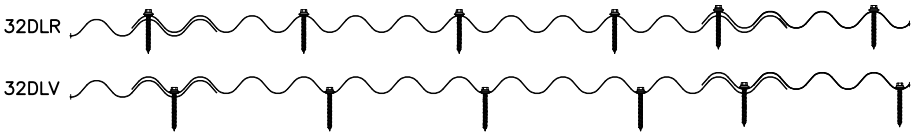

ALTERNATE FASTENING PATTERN

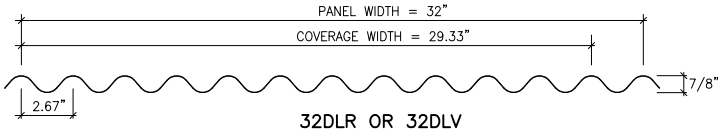

32DLR OR 32DLV

PANEL SECTION

(MIN 26 GA.)

GENERAL NOTES:

1. ARCHITECTURAL ROOF PANEL HAS BEEN DESIGNED IN ACCORDANCE WITH THE FLORIDA BUILDING CODE (FBC).
2. ROOF PANELS SHALL BE MINIMUM 26 GA. MAXIMUM COVERAGE WIDTH IS 29.33".
3. THE ROOF PANELS SHALL BE INSTALLED OVER SHEATHING & STRUCTURE AS SPECIFIED ON THIS DRAWING.
4. REQUIRED DESIGN WIND LOADS SHALL BE DETERMINED FOR EACH PROJECT. THIS PANEL SYSTEM MAY NOT BE INSTALLED WHEN THE REQUIRED DESIGN WIND LOADS ARE GREATER THAN THE ALLOWABLE WIND LOAD TABLE.
5. ALL FASTENERS MUST BE IN ACCORDANCE WITH THIS DRAWING & THE FLORIDA BUILDING CODE. IF A DIFFERENCE OCCURS BETWEEN THE MINIMUM REQUIREMENTS OF THIS DRAWING & THE CODE, THE CODE SHALL CONTROL.
6. RAFTERS/JOISTS/TRUSSES MUST BE DESIGNED TO WITHSTAND WIND LOADS AS REQUIRED FOR EACH APPLICATION AND ARE THE RESPONSIBILITY OF OTHERS.

DRAWN BY: B.S.	CHECKED BY: J.S
PLOT:	DATE: 4/19/19

NO.	REVISION DESCRIPTION	BY	DATE

DRAWING TITLE: 26 GA. 7/8" CORRUGATED PANEL

MANUFACTURER: UNION CORRUGATING CO.
701 S. KING STREET
FAYETTEVILLE, NC 28301
910-483-2195

CONSULTANTS: BALA SOCKALINGAM, PH.D., P.E.
1216 N LANSING AVE, SUITE C
TULSA, OK 74106
PHONE: 918-492-5992 FAX: 866-366-1543

DRAWING NO. 2402-1 REV.

UNION CORRUGATING COMPANY
7/8" Corrugated Panel Uplift Loads
(Min 26 ga.)

Description	Fastener Spacing along Panel Length (in)	Allowable Uplift Load (psf)
Max Coverage width: 29.33"	**8**	**115.2**
	10	99.7
Panel Fasteners #10-14 hex head wood screws with sealed washer	12	83.1
	14	71.2
	16	62.3
	18	55.4
Panel fasteners spaced at max. 8" o.c. across panel width through ridge or valley	20	49.9
	22	45.3
	24	**41.6**

Notes:

1. The bold numbers indicate design loads calculated from test data with safety factor of 2.
2. Panels must be installed as per Evaluation Report FL 29467.1 and Union current installation procedure.

BALA SOCKALINGAM
LICENSE
No 62240
STATE OF FLORIDA
PROFESSIONAL ENGINEER

10.9.2020

1216 N Lansing Ave., Suite C
Tulsa, Ok 74106
918 492 5992

Bala Sockalingam, Ph.D., P.E.
FL 62240