DrJ™ CERTIFICATION

ANAB
ANSI National Accreditation Board
ACCREDITED
ISO/IEC 17065
PRODUCT CERTIFICATION BODY

MEMBER OF MULTILATERAL RECOGNITION ARRANGEMENT IAF

Approved. Sealed. Code Compliant.

Technical Evaluation Report

TER 1306-02

Ox ISO RED CI®, ISO RED CI XS, ISO RED MAX®, ISO RED MAX® WF, ISO RED MAX® GF, ISO RED MAX® LD, & ISO RED MAX® HD Foam Plastic Insulating Sheathing

Ox Engineered Products, LLC

Products:

ISO RED Polyiso Foam Insulated Sheathing Products

KIRK H. GRUNDAHL
LICENSE
No 73618
STATE OF
FLORIDA
PROFESSIONAL ENGINEER

02/11/2021

Kirk Grundahl

Digitally signed by Kirk Grundahl
Date: 2021.02.11 13:43:22 -06'00'

Issue Date:
June 24, 2013
Revision Date:
February 11, 2021
Subject to Renewal:
August 1, 2022

COMPANY
INFORMATION:

Ox Engineered Products, LLC

1255 N 5th St
Charleston, IL 61920-1175

269-435-2425

oxengineeredproducts.com

DIVISION: 07 00 00 - THERMAL AND MOISTURE PROTECTION

SECTION: 07 20 00 - Thermal Protection

SECTION: 07 21 00 - Thermal Insulation

SECTION: 07 22 00 - Roof and Deck Insulation

SECTION: 07 25 00 - Water-Resistive Barriers/Weather Barriers

SECTION: 07 27 00 - Air Barriers

1 PRODUCTS EVALUATED[1]

1.1 ISO RED Polyiso Foam Insulated Sheathing Products

1.1.1 ISO RED CI® Polyiso Foam Insulated Sheathing

1.1.2 ISO RED CI XS Polyiso Foam Insulated Sheathing

1.1.3 ISO RED MAX® Polyiso Foam Insulated Sheathing

1.1.4 ISO RED MAX® WF Polyiso Foam Insulated Sheathing

1.1.5 ISO RED MAX® GF Polyiso Foam Insulated Sheathing

1.1.6 ISO RED MAX® LD Polyiso Foam Insulated Sheathing

1.1.7 ISO RED MAX® HD Polyiso Foam Insulated Sheathing

[1] Building codes require data from valid research reports be obtained from *approved sources*. Agencies who are accredited through ISO/IEC 17065 have met the code requirements for approval by the *building official*. DrJ is an ISO/IEC 17065 ANAB-Accredited Product Certification Body – Accreditation #1131.

Through ANAB accreditation and the IAF MLA, DrJ certification can be used to obtain product approval in any *jurisdiction* or country that has IAF MLA Members & Signatories to meet the Purpose of the MLA – "certified once, accepted everywhere."

Building official approval of a licensed *registered design professional* (RDP) is performed by verifying the RDP and/or their business entity complies with all professional engineering laws of the relevant *jurisdiction*. Therefore, the work of licensed RDPs is accepted by *building officials*, except when plan (i.e., peer) review finds an error with respect to a specific section of the code. Where this TER is not approved, the *building official* responds in writing stating the reasons for disapproval.

For more information on any of these topics or our mission, product evaluation policies, product approval process, and engineering law, visit drjcertification.org or call us at 608-310-6748.

© 2021 DRJ ENGINEERING, LLC

2 Applicable Codes and Standards[2,3]

2.1 *Codes*

2.1.1 *IBC—12, 15, 18: International Building Code®*

2.1.2 *IRC—12, 15, 18: International Residential Code®*

2.1.3 *FBC-B—17, 20: Florida Building Code – Building[4] (FL 28290)*

2.1.4 *FBC-R—17, 20: Florida Building Code – Residential[5] (FL 28290)*

2.2 *Standards and Referenced Documents*

2.2.1 *ASTM C1289: Standard Specification for Faced Rigid Cellular Polyisocyanurate Thermal Insulation Board*

2.2.2 *ASTM C203: Standard Test Methods for Breaking Load and Flexural Properties of Block-Type Thermal Insulation*

2.2.3 *ASTM C209: Standard Test Methods for Cellulosic Fiber Insulating Board*

2.2.4 *ASTM C518: Standard Test Method for Steady-State Thermal Transmission Properties by Means of the Heat Flow Meter Apparatus*

2.2.5 *ASTM D2126: Standard Test Method for Response of Rigid Cellular Plastics to Thermal and Humid Aging*

2.2.6 *ASTM E119: Standard Test Methods for Fire Tests of Building Construction and Materials*

2.2.7 *ASTM E1354: Standard Test Method for Heat and Visible Smoke Release Rates for Materials and Products Using an Oxygen Consumption Calorimeter*

2.2.8 *ASTM E2178: Standard Test Method for Air Permeance of Building Materials*

2.2.9 *ASTM E330: Standard Test Method for Structural Performance of Exterior Windows, Doors, Skylights and Curtain Walls by Uniform Static Air Pressure Difference*

2.2.10 *ASTM E331: Standard Test Method for Water Penetration of Exterior Windows, Skylights, Doors, and Curtain*

2.2.11 *ASTM E84: Standard Test Method for Surface Burning Characteristics of Building Materials*

2.2.12 *NFPA 259: Standard Test Method for Potential Heat of Building Materials*

2.2.13 *NFPA 285: Standard Fire Test Method for the Evaluation of Fire Propagation Characteristics of Exterior Nonload-bearing Wall Assemblies Containing Combustible Components*

2.2.14 *NFPA 286: Standard Methods of Fire Test for Evaluating Contribution of Wall and Ceiling Interior Finish to Room Fire Growth*

2.2.15 *SBCA ANSI/FS 100: Standard Requirements for Wind Pressure Resistance of Foam Plastic Insulating Sheathing Used in Exterior Wall Covering Assemblies*

3 Performance Evaluation

3.1 ISO RED CI® and ISO RED CI XS have been evaluated to determine:

3.1.1 Wind pressure resistance performance for use as part of an exterior wall covering assembly in accordance with *IBC* Section 1403.8,[6] *IRC* Section R703.3, and *ANSI/FS100*.

3.1.2 Performance in accordance with the foam plastic requirements of *IBC* Section 2603 and *IRC* Section R316.

---

[2] Unless otherwise noted, all references in this TER are from the 2018 version of the codes and the standards referenced therein (e.g., *ASCE 7, NDS, ASTM*). This material, design, or method of construction also complies with the 2000-2015 versions of the referenced codes and the standards referenced therein.

[3] All terms defined in the applicable building codes are italicized.

[4] All references to *FBC-B* are the same as the *2018 IBC* unless otherwise noted.

[5] All references to *FBC-R* are the same as the *2018 IRC* unless otherwise noted.

[6] 2015 *IBC* Section 1404.8

© 2021 DRJ ENGINEERING, LLC

3.1.3 Performance for use as continuous insulating sheathing in accordance with *IRC* Section N1102 and *IECC* Section C402.

3.1.4 Performance for use as a water-resistive barrier (WRB) in accordance with *IBC* Section 1403.2[7] and *IRC* Section R703.2.

3.1.5 Performance for use as a vapor retarder in accordance with *IBC* Section 202 and 1404.3[8] and *IRC* Section R202 and R702.7.

3.1.6 Performance for use as an air barrier in accordance with *IECC* Section C402.

3.1.7 Performance of ISO RED CI® and ISO RED CI XS for vertical and lateral fire propagation is outside the scope of this TER.

3.2 ISO RED MAX®, ISO RED MAX® WF, ISO RED MAX® GF, ISO RED MAX® LD, and ISO RED MAX® HD have been evaluated to determine:

3.2.1 Performance in accordance with the foam plastic requirements of *IBC* Section 2603 and *IRC* Section R316.

3.2.2 Performance for use as continuous insulating sheathing in accordance with *IRC* Section N1102 and *IECC* Section C402.

3.2.3 Performance for use as a vapor retarder in accordance with *IBC* Section 202 and 1404.3[9] and *IRC* Section R202 and R702.7.

3.2.4 Performance for use as an air barrier in accordance with *IECC* Section C402.

3.2.5 Performance for use without a thermal barrier in accordance with *NFPA 286* and the acceptance criteria of *IBC* Section 803.1.1[10].

3.2.6 Performance for vertical and lateral fire propagation in accordance with *NFPA* 285 and *IBC* Section 2603.5.5.

3.2.7 Performance for use as a WRB in accordance with *IBC* Section 1403.2[11] and *IRC* Section R703.2.

3.2.8 Performance of ISO RED MAX®, ISO RED MAX® WF, ISO RED MAX® GF, ISO RED MAX® LD, and ISO RED MAX® HD for wind pressure resistance is outside the scope of this TER.

3.3 When used as over-sheathing[12] on light-frame, masonry, or concrete exterior walls, ISO RED is not required to meet the wind pressure resistance requirements of this TER.

3.4 This TER does not address wind pressure resistance requirements for ISO RED CI® or ISO RED CI XS used as part of an Exterior Insulation Finish System (EIFS). Refer to the EIFS manufacturer's installation instructions for building code compliance.

3.5 These products shall comply with the material standards listed in Section 4 and shall be applied to exterior wall construction in accordance with the general requirements of Section 6. ISO RED CI® and ISO RED CI XS shall also comply with the prescriptive wind pressure resistance requirements of Section 5.1.5.

3.6 ISO RED CI® and ISO RED CI XS used in accordance with this TER that is required to resist wind pressure in exterior wall covering assemblies shall also comply with the product marking requirements of Section 10, and the conditions of use listed in Section 9.

3.7 Any code compliance issues not specifically addressed in this section are outside the scope of this TER.

---

[7] 2015 *IBC* Section 1404.2

[8] 2015 *IBC* Section 1405.3

[9] 2015 *IBC* Section 1405.3

[10] 2015 *IBC* Section 803.1.2

[11] 2015 *IBC* Section 1404.2

[12] As used in this TER, *over-sheathing* refers to the application of foam sheathing over and directly on the surface of wall sheathing material or solid wall construction, such as masonry or concrete, whereby the substrate is capable of resisting the full design transverse wind load required by the applicable building code or latest edition of the *ASCE 7* standard. In addition, cladding is separately installed over foam sheathing in accordance with Section 5.1.5. An over-sheathing application of foam sheathing does not require that the foam sheathing resist wind pressure in accordance with this TER.

© 2021 DRJ ENGINEERING, LLC

3.8 Any engineering evaluation conducted for this TER was performed on the dates provided in this TER and within DrJ's professional scope of work.

4 Product Description and Materials

4.1 *ISO RED CI® and ISO RED CI XS*

4.1.1 ISO RED CI® and ISO RED CI XS are Type I, Class 1 Dual Faced Rigid Cellular Polyisocyanurate Insulation Board products as defined in *ASTM C1289*.

4.1.2 ISO RED CI® and ISO RED CI XS consist of a proprietary polyisocyanurate rigid board with facers on both sides. The facers are designed with a base foil layer combined with layers of other material(s).

4.2 *ISO RED MAX®, ISO RED MAX® WF, ISO RED MAX® GF, ISO RED MAX® LD, ISO RED MAX® HD*

4.2.1 These products are Type I, Class 2 Dual Faced Rigid Cellular Polyisocyanurate Insulation Board products as defined in *ASTM C1289*.

4.2.2 These products consist of a proprietary polyisocyanurate rigid board with facers on both sides. The facers are designed with a base foil layer. Facer material thicknesses vary by product.

4.2.3 The products evaluated in this TER are shown in Figure 1, Figure 2, and Figure 3.

FIGURE 1. ISO RED CI®

FIGURE 2. ISO RED CI XS

FIGURE 3. ISO RED MAX®

© 2021 DRJ ENGINEERING, LLC

4.3 *Material Availability*

4.3.1 *Thickness*:

4.3.1.1 ISO RED CI® and ISO RED CI XS – range from 0.5" (12.7 mm) up to 2.0" (50.8 mm)

4.3.1.2 ISO RED MAX® (including WF, GF, LD, and HD) – up to 4.0" (102 mm)

4.3.2 Standard product width: 48" (1219 mm)

4.3.3 Standard lengths: 96", 108", and 120" (2438 mm, 2743 mm, and 3048 mm)

5 APPLICATIONS

5.1 *General*

5.1.1 ISO RED CI® and ISO RED CI XS are foam plastic insulating sheathing (FPIS) used as wall sheathing in accordance with *IBC* Section 2603 and *IRC* Section R316 for Type V construction.

5.1.2 ISO RED MAX®, ISO RED MAX® WF, ISO RED MAX® GF, ISO RED MAX® LD, and ISO RED MAX® HD are foam plastic insulating sheathing (FPIS) used as wall sheathing in accordance with *IBC* Section 2603 for Types I, II, III, IV, and V construction.

5.1.3 Except as provided for in Section 5.6, ISO RED CI® and ISO RED CI XS must be used with full protection from the interior of the building by an approved thermal barrier in accordance with *IBC* Section 2603.4 and *IRC* Section R316.4.

5.1.4 ISO RED MAX®, ISO RED MAX® WF, ISO RED MAX® GF, ISO RED MAX® LD, and ISO RED MAX® HD are approved for use without the protection of a thermal barrier in accordance with *IBC* Section 2603.10 and *IRC* Section R316.6, when applied to walls or ceilings.

5.1.5 Where the application exceeds the limitations set forth herein, design shall be permitted in accordance with accepted engineering procedures, experience, and technical judgment.

5.2 *Transverse Loads*

5.2.1 ISO RED CI® and ISO RED CI XS may be used to resist wind loads transverse to the face of the wall, as shown in Table 1.

5.2.2 Required component and cladding loads to be resisted are found in *IBC* Section 1609.1.1 and *IRC* Table R301.2(2) and R301.2(3).

5.2.3 As stated in Section 3.2.8, performance of ISO RED MAX®, ISO RED MAX® WF, ISO RED MAX® GF, ISO RED MAX® LD, and ISO RED MAX® HD for wind pressure resistance is outside the scope of this TER.

TABLE 1. SUMMARY OF TRANSVERSE WIND LOAD RESISTANCE OF ISO RED CI® AND ISO RED CI XS[1]

ISO RED CI®/ISO RED CI XS Nominal Thickness (in)	Maximum Allowable Design Value (psf)	Maximum Allowable Wind Speed (mph)	
		Per *ASCE 7-05* (V_{asd})	Per *ASCE 7-10* and *7-16* (V_{ult})
1	38.1	125	160

SI: 1 in = 25.4 mm, 1 psf = 0.0479 kN/m², 1 mph = 1.61 km/h

1. Allowable wind speeds are based on the following: components and cladding loads, Exposure B, wall zone 5 (corner), 10 sq. ft.
2. Any required adjustments to these loads for other site conditions shall be in accordance with the applicable building code.
3. Allowable design wind pressures are determined in accordance with *SBCA ANSI/FS100* with studs spaced a maximum of 16" o.c.

5.3 *Thermal Resistance*

5.3.1 ISO RED CI®, ISO RED CI XS, ISO RED MAX®, ISO RED MAX® WF, ISO RED MAX® GF, ISO RED MAX® LD, and ISO RED MAX® HD are FPIS panels used as thermal insulation in wall, roof, and ceiling assemblies.

5.3.2 These products meet the continuous insulating sheathing requirements complying with the provisions of *IRC* Section N1102 and *IECC* Section C402.

5.3.3 These products have the thermal properties shown in Table 2.

© 2021 DRJ ENGINEERING, LLC

TABLE 2. THERMAL RESISTANCES OF ISO RED POLYISO FOAM INSULATED SHEATHING PRODUCTS

Product	Thickness (in)	R-Value[1]
ISO RED CI® and ISO RED CI XS	2.0	13.0
	1.55	10.0
	1.0	6.5
	0.5	3.3
ISO RED MAX®, ISO RED MAX® WF, ISO RED MAX® GF, ISO RED MAX® LD, and ISO RED MAX® HD	4.0	25.2
	3.5	22.1
	3.0	19.0
	2.5	16.0
	2.0	13.0
	1.55	10.0
	1.0	6.5
	0.75	5.0
	0.5	3.3

SI: 1 in = 25.4 mm

1. Thermal values are determined using the *ASTM C518* test method at 75°F mean temperature on material conditioned according to *ASTM C1289* Section 11.1 (F*ft²*hr/Btu)

5.4 *Air Barrier*

5.4.1 Wall and ceiling assemblies constructed with ISO RED CI®, ISO RED CI XS, ISO RED MAX®, ISO RED MAX® WF, ISO RED MAX® GF, ISO RED MAX® LD, and ISO RED MAX® HD are used to meet air barrier requirements in accordance with *IECC* Section C402.

5.4.2 All penetrations shall be flashed and sealed in accordance with the flashing manufacturer's installation instructions. Self-adhered flashing tape shall meet *AAMA 711* (FortiFlash Butyl or equivalent).

5.4.3 These products are defined as air barrier materials having an air permeance of less than 0.02 L/m*ft^2, in accordance with *IECC* Section C402.5.[13]

5.5 *Water Resistive Barrier*

5.5.1 ISO RED CI®, ISO RED CI XS, ISO RED MAX®, ISO RED MAX® WF, ISO RED MAX® GF, ISO RED MAX® LD, and ISO RED MAX® HD are approved WRBs in accordance with *IBC* Section 1403.2[14] and *IRC* Section R703.2 when installed with 2½"-wide 3M (8087), White 3M Venture 1558 HT, Venture 1520 CW Aluminum Foil Sheathing Tape, or equivalent on all sheathing seams. Four inch (4") wide self-adhered flashing tape meeting *AAMA 711* (FortiFlash Butyl or equivalent) with release liner may be required for effective taping of inside and outside corners. See the manufacturer's product information for further details.

5.5.2 ISO RED CI® and ISO RED CI XS shall be installed with board joints placed directly over exterior framing spaced a maximum of 24" (610 mm) o.c. The fasteners used to attach the board shall be installed in accordance with Section 6.

5.5.3 A separate WRB may also be provided. If a separate WRB method is used, taping of the sheathing joints is not required.

[13] 2012 *IECC* Section C402.4

[14] 2015 *IBC* Section 1404.2

© 2021 DRJ ENGINEERING, LLC

5.5.4 Flashing of penetrations shall comply with the applicable code and must be installed at all sheathing penetrations. Use qualified flashing material such as self-adhered flashing tape meeting *AAMA 711* (3M All Weather Flashing Tape 8067 or equivalent). See Figure 4, Figure 5, and Figure 6 for typical penetration flashing details.

5.5.5 Flashing Details – Typical Flanged (Figure 4) and Unflanged (Figure 5) Penetration and Flanged Window (Figure 6).

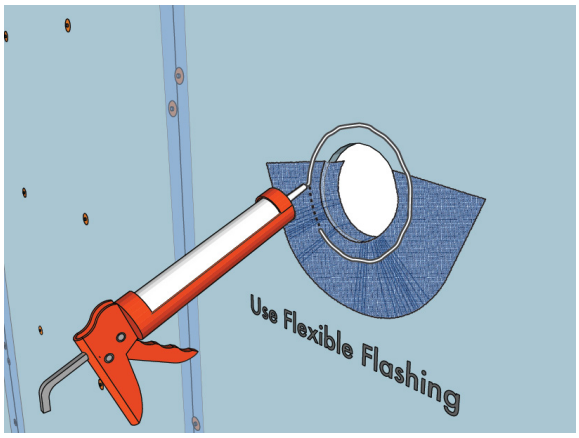

STEP 1

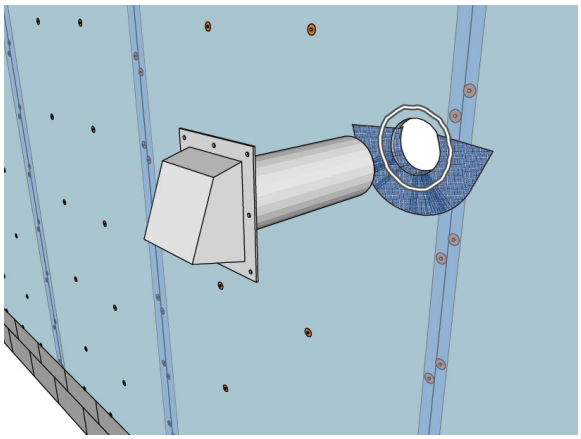

STEP 2

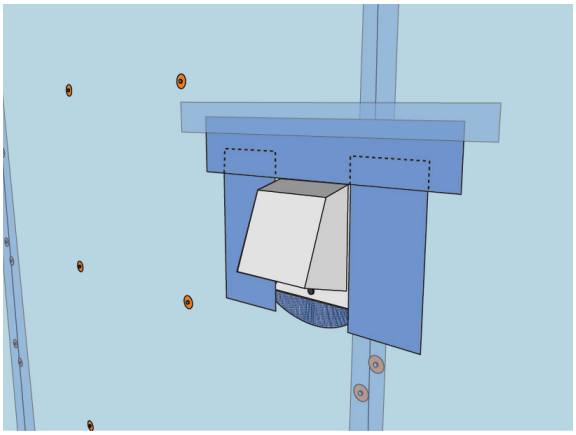

STEP 3

FIGURE 4. TYPICAL PENETRATION FLASHING DETAIL – FLANGED

© 2021 DRJ ENGINEERING, LLC

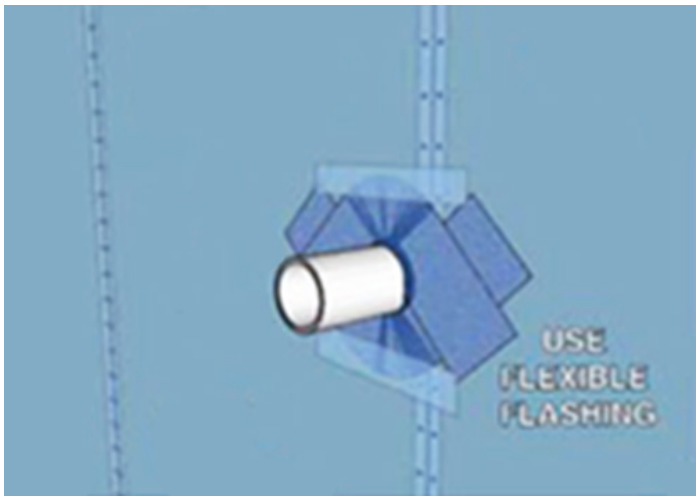

FIGURE 5. TYPICAL PENETRATION FLASHING DETAIL – UNFLANGED

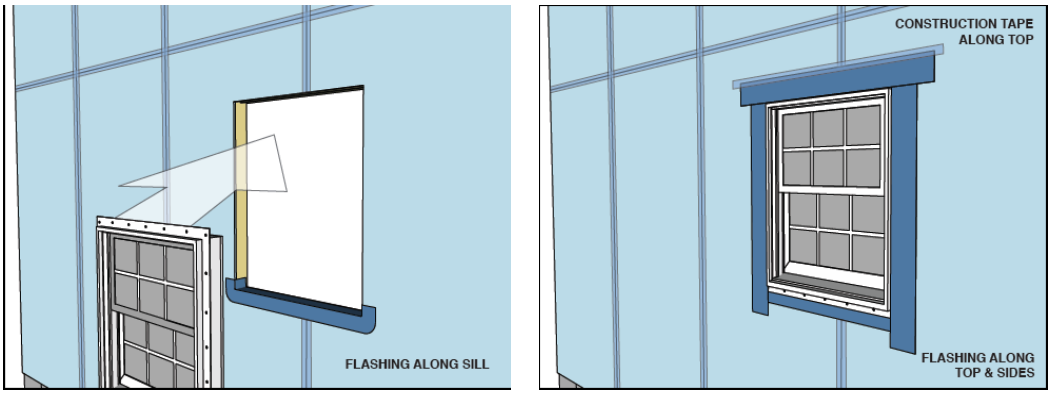

STEP 1 **STEP 2**

FIGURE 6. TYPICAL WINDOW FLASHING DETAIL

5.6 *Fire Safety Performance*

5.6.1 *Surface Burn Characteristics:*

5.6.1.1 ISO RED CI®, ISO RED CI XS, ISO RED MAX®, ISO RED MAX® WF, ISO RED MAX® GF, ISO RED MAX® LD, and ISO RED MAX® HD have the flame spread and smoke developed ratings as shown in Table 3 when tested in accordance with *ASTM E84* per *IBC* Section 2603.3 and *IRC* Section R316.3.

TABLE 3. FIRE PERFORMANCE OF ISO RED CI®, ISO RED CI XS, ISO RED MAX®, ISO RED MAX® WF, ISO RED MAX® GF, ISO RED MAX® LD AND ISO RED MAX®HD

Product	Flame Spread	Smoke Developed
ISO RED CI® and ISO RED CI XS[1]	< 75	< 450
ISO RED MAX®, ISO RED MAX® WF, ISO RED MAX® GF, ISO RED MAX® LD, and ISO RED MAX® HD[2]	< 25	< 450

1. Tested in accordance with *ASTM E84*, with maximum foam thickness of 2".
2. Tested in accordance with *ASTM E84*, with maximum foam thickness of 4".

5.6.2 *Vertical and Lateral Fire Propagation:*

5.6.2.1 ISO RED MAX®, ISO RED MAX® WF, ISO RED MAX® GF, ISO RED MAX® LD, and ISO RED MAX® HD were tested to assess performance with regard to vertical and lateral fire propagation in accordance with *NFPA 285* and *IBC* Section 2603.5.5.

© 2021 DRJ ENGINEERING, LLC

5.6.2.2 Engineering analysis has also been conducted to assess substitution of other products within the approved wall assemblies.

5.6.2.3 The wall assemblies listed in Table 4 and Table 5 are approved for use in buildings of Type I-IV construction.

TABLE 4. APPROVED *NFPA 285* WALL ASSEMBLIES – BRICK CLADDING[1]

Wall Component	Materials
Base Wall System Use either 1, 2, 3 or 4 Note: May use 4 optionally when FRTW framing is allowed by code.	1. Cast Concrete Wall 2. Concrete Masonry Wall 3. 20-gauge (min.) 3⅝" (min.) steel studs spaced 24" o.c. (max) a. 1 layer – ⅝"-thick Type X gypsum wallboard on interior b. Lateral bracing every 4' 4. Where allowed in Types I-IV construction, FRTW (Fire Retardant Treated Wood) studs complying with *IBC* Section 2303.2, minimum nominal 2x4 spaced at a maximum 16" o.c. a. ⅝" (min.) Type X gypsum wallboard interior. b. Wall braced at mid-height and fire-stopped at top and bottom.
Fire-Stopping in Stud Cavities at Floor Lines. Use 2 with FRTW framing.	1. Any approved 4 pcf mineral fiber based safing insulation in each stud cavity at floor line. Safing thickness must match stud cavity depth. 2. Solid FRTW fire blocking at floor line when Base Wall System, Item 4 is used.
Cavity Insulation Use any option 1-13	1. None 2. 1½" (min.) BASF Wallite™ 2 pcf SPF (or equivalent) up to full cavity fill. 3. 1½" (min.) Premium Spray Products Foamsulate 20 up to full cavity fill. 4. Any noncombustible insulation per *ASTM E136.* 5. Any mineral fiber (Batt or board type Class A *ASTM E84* faced or unfaced). 6. Any fiberglass (Batt type Class A *ASTM E84* faced or unfaced). 7. Icynene Classic, Classic Plus, Classic Ultra or Classic Ultra Select; MD-R-210; MD-C-200; or Proseal. Partial cavity fill with a max. air space of 2" or full cavity fill not exceeding 7⅝". Use with ½" exterior gypsum sheathing (min.). 8. NCFI Polyurethanes, full cavity depth or less of InsulBloc, InsulStar, InsulStar Plus or ThermalStop™ closed cell (2.0 lb/ft^3) spray polyurethane foam applied using sheathing as substrate and covering the width of the cavity. Use with ½" exterior gypsum sheathing (min.). 9. SWD Urethane Quik-Shield 112 spray polyurethane foam applied using ⅝" Type X sheathing as substrate. Air gap must not exceed 2½". 10. Demilec Sealection 500 or HeatLok Soy 200, up to full cavity fill. Use with ⅝" Type X exterior gypsum sheathing. 11. Accella Polyurethane Bayseal® OC and OCX or Bayseal® CC, up to full cavity fill using minimum ½" exterior gypsum sheathing. 12. Lapolla™ Foam-Lok™ FL 2000 with ⅝" Type X exterior sheathing in 3⅝" studs (max.) 13. Any cavity insulation which has been tested per *ASTM E1354* (at a min. of 20 kw/m^2 heat flux) and shown by analysis to be of equivalent or lesser flammability (based on T_{ign}, Pk. HRR) than the foam tested in Item 2 or 3 above.
Exterior Sheathing Use either 1, 2 or 3 (with limitations noted in Cavity Insulation Allowances) Note: Exterior FRTW sheathing or gypsum wallboard is optional for Base Walls 1 and 2.	1. None 2. Minimum ½" exterior gypsum sheathing (unless ⅝" Type X exterior sheathing is otherwise specified with cavity insulations). 3. ½" (min.) FRTW structural panels complying with *IBC* Section 2303.2 and installed in accordance with the code requirements for Types I-IV construction.

© 2021 DRJ ENGINEERING, LLC

Wall Component	Materials
Water-Resistive Barrier Over Base Wall Use either 1, 2, or 3 Note: Item 3 applies when exterior gypsum sheathing is used.	1. None 2. WRB's over Steel Framing: a. Kingspan GreenGuard® Max Building Wrap b. Dupont Tyvek (Various per ESR 2375) c. Dow Weathermate™ d. Dow Weathermate™ Plus e. Ox ThermoPly 3. WRBs over exterior sheathing: a. Henry Air Bloc 32MR b. Henry Foilskin c. Henry MetalClad d. CCW 705 FR-A e. Kingspan GreenGuard® Max Building Wrap f. Dupont Tyvek (various per ESR-2375) g. Dow Weathermate™ h. Dow Weathermate™ Plus i. Any WRB that has been tested per *ASTM E1354* (at a min. of 20 kw/m^2 heat flux) and shown by analysis to be of equivalent or lesser flammability (based on T_{ign}, Pk. HRR) than the exterior insulation foam core or baseline Item 3a above.
Exterior Insulation	Up to 4"-thick OX ISO RED MAX®, consisting of a single panel or multiple thinner panels
WRB Over Exterior Insulation Use either 1 or 2	1. Aluminum construction tape as tested (or equivalent), max. 6" wide over staggered insulation joints. 2. For use with all Exterior Cladding options as written below: a. Henry Foilskin b. Henry MetalClad c. CCW 705 FR-A d. Kingspan GreenGuard® Max Building Wrap e. Dupont Tyvek (various per ESR-2375) f. Dow Weathermate™ g. Dow Weathermate™ Plus h. Any WRB which has been tester per *ASTM E1354* (at a min. of 20 kw/m2 heat flux) and shown by analysis to be of equivalent or lesser flammability (based on Tign, Pk. HRR) than those listed above.
Exterior Cladding Use 1 through 6 Note: Masonry cladding items 2-6 do not employ an air gap or open joints.	1. Brick – Nominal 4" clay brick or veneer with max. 2" air gap behind the brick. Brick ties/anchors 24" o.c. (max.). 2. Stucco – Minimum $^3/_4$"-thick exterior cement plaster and lath with approved WRB over insulation. 3. Limestone – Minimum 2" thick, using any standard non-open joint installation technique such as shiplap. 4. Natural Stone Veneer – Minimum 2" thick using any standard non-open joint installation technique. 5. Terracotta Cladding – Minimum 1$^1/_4$" thick (solid or equivalent by weight) using any standard non-open joint installation technique such as shiplap. 6. Cast Artificial Stone – Minimum 1$^1/_2$" thick complying with *ICC-ES AC51* installed using any standard non-joint installation technique such as shiplap.

SI: 1 in = 25.4 mm, 1 lb = 4.45 N, 1 lb/ft = 0.0146 kN/m, 1 psf = 0.0479 kN/m^2, 1 psi = 0.00689 MPa, 1 mph = 1.61 km/h

1. The assemblies' combinations created herein and the various substitutions of products are based on testing and professional thermal engineering analysis by Priest & Associates Consulting, LLC.
2. Acceptance criteria for *ASTM E1354* testing have not been well established in the referenced building codes and foam sheathing related sections. The criteria stated here for substitution of products is based on testing and professional thermal engineering analysis by Priest & Associates.
3. T_{ign} is the time to ignition from the start of the test until the sheathing ignites. Pk. HRR is the peak heat release rate during the test.

© 2021 DRJ ENGINEERING, LLC

TABLE 5. APPROVED *NFPA 285* WALL ASSEMBLIES - ACM CLADDING[1]

Wall Component	Materials
Base Wall System Use either 1, 2, 3 or 4 Note: May use 4 optionally when FRTW framing is allowed by code	1. Cast Concrete Wall 2. Concrete Masonry Wall 3. 20-gauge (min.) 3⁵/₈" (min.) steel studs spaced 24" o.c. (max) a. 1 layer – ⁵/₈"-thick Type X gypsum wallboard on interior b. Lateral bracing every 4' 4. Where allowed in Types I-IV construction, FRTW (Fire Retardant Treated Wood) studs complying with *IBC* Section 2303.2, minimum nominal 2x4 spaced at a maximum 16" o.c. a. ⁵/₈" (min.) Type X gypsum wallboard interior. b. Wall braced at mid-height and fire-stopped at top and bottom
Fire-Stopping in Stud Cavities at Floor Lines. Use 2 with FRTW framing. Use either 1 or 2. As an option, use 2 with FRTW framing	1. Any approved 4 pcf mineral fiber based safing insulation in each stud cavity at floor line. Safing thickness must match stud cavity depth. 2. Solid FRTW fire blocking at floor line when Base Wall System, Item 4 is used.
Cavity Insulation Use any option 1-13	1. None 2. 1½" (min.) BASF Wallite™ 2 pcf SPF (or equivalent) up to full cavity fill. 3. 1½" (min.) Premium Spray Products Foamsulate 20 up to full cavity fill. 4. Any noncombustible insulation per *ASTM E136.* 5. Any mineral fiber (Batt or board type Class A *ASTM E84* faced or unfaced). 6. Any fiberglass (Batt type Class A *ASTM E84* faced or unfaced). 7. Icynene Classic, Classic Plus, Classic Ultra or Classic Ultra Select; MD-R-210; MD-C-200; or Proseal. Partial cavity fill with a max. air space of 2" or full cavity fill not exceeding 7⁵/₈". Use with ½" exterior gypsum sheathing (min.). 8. NCFI Polyurethanes, full cavity depth or less of InsulBloc, InsulStar, InsulStar Plus or ThermalStop™ closed cell (2.0 lb/ft³) spray polyurethane foam applied using sheathing as substrate and covering the width of the cavity. Use with ½" exterior gypsum sheathing (min.). 9. SWD Urethane Quik-Shield 112 spray polyurethane foam applied using ⁵/₈" Type X sheathing as substrate. Air gap must not exceed 2½". 10. Demilec Sealection 500 or HeatLok Soy 200, up to full cavity fill. Use with ⁵/₈" Type X exterior gypsum sheathing. 11. Accella Polyurethane Bayseal® OC and OCX or Bayseal® CC, up to full cavity fill using minimum ½" exterior gypsum sheathing. 12. Lapolla™ Foam-Lok™ FL 2000 with ⁵/₈" Type X exterior sheathing in 3⁵/₈" studs (max.) 13. Any cavity insulation which has been tested per *ASTM E1354* (at a min. of 20 kw/m² heat flux) and shown by analysis to be of equivalent or lesser flammability (based on T_{ign}, Pk. HRR) than the foam tested in Item 2 or 3 above.
Exterior Sheathing Use either 1, 2 or 3 Note: Exterior FRTW sheathing or gypsum wallboard is optional for Base Walls 1 and 2.	1. Minimum ¹/₂" exterior gypsum sheathing (⁵/₈" Type X exterior gypsum sheathing required when SPF in cavity). 2. ¹/₂" (min.) FRTW structural panels complying with *IBC* section 2303.2 and installed in accordance with the code requirements for Types I-IV construction.

© 2021 DRJ ENGINEERING, LLC

Wall Component	Materials
Water-Resistive Barrier Over Base Wall Use any item 1-8	1. None 2. Any WRB that has been tested per *ASTM E1354* (at a min. of 20 kw/m^2) and shown by analysis to be of equivalent or lesser flammability (based on T_{ign}, Pk. HRR) than the exterior insulation foam core or baseline Item 3 below. 3. Henry Air Bloc 32MR 4. Kingspan GreenGuard® Max Building Wrap 5. Dupont Tyvek (Various per ESR-2375) 6. Dow Weathermate™ 7. Dow Weathermate™ Plus 8. WRBs over exterior sheathing: a. Henry Foilskin b. Henry MetalClad c. CCW 705 FR-A d. Kingspan GreenGuard® Max Building Wrap e. Dupont Tyvek (various per ESR-2375) f. Dow Weathermate™ g. Dow Weathermate™ Plus
Exterior Insulation	Up to 4"-thick OX ISO RED MAX®, consisting of a single panel or multiple thinner panels
WRB Over Exterior Insulation Use any item 1-5	1. None 2. Aluminum construction tape as tested (or equivalent), max. 6" wide over staggered insulation joints. 3. Henry Foilskin 4. Henry MetalClad 5. CCW 705 FR-A
Exterior Cladding Use any item 1-11	1. Brick – Nominal 4" clay brick or veneer with max. 2" air gap behind the brick. Brick ties/anchors 24" o.c. (max.). 2. Stucco – Minimum $^3/_4$"-thick exterior cement plaster and lath with an optional secondary water resistive barrier between the exterior insulation and lath. The secondary barrier shall not be full coverage asphalt or self-adhered butyl membrane. 3. Limestone – Minimum 2" thick, using any standard installation technique. 4. Natural Stone Veneer – Minimum 2" thick using any standard installation technique. 5. Cast Artificial Stone – Minimum 1$^1/_2$" thick complying with *ICC-ES AC51* installed using any standard installation technique. 6. Terracotta Cladding – Minimum 1$^1/_4$" thick, using any standard installation technique. 7. Any MCM, ACM (aluminum, steel, copper, zinc) (w/ 1$^1/_2$" ± $^1/_2$" air gap) that has successfully passed NFPA 285 using any standard installation technique. 8. Uninsulated sheet metal building panels including aluminum, steel or copper using any standard installation technique. 9. Uninsulated Fiber-cement siding using any standard installation technique. 10. Stone/Aluminum honeycomb composite building panels that have passed *NFPA 285* or equivalent (StoneLite Wall Panels by Stone Panels – ESR-1500) 11. Autoclaved-aerated-concrete (AAC) panels that have successfully passed *NFPA 285* using any standard installation technique.

SI: 1 in = 25.4 mm, 1 lb = 4.45 N, 1 lb/ft = 0.0146 kN/m, 1 psf = 0.0479 kN/m^2, 1 psi = 0.00689 MPa, 1 mph = 1.61 km/h

1. The assemblies' combinations created herein and the various substitutions of products are based on testing and professional thermal engineering analysis by Priest & Associates Consulting, LLC.
2. Acceptance criteria for *ASTM E1354* testing have not been well established in the referenced building codes and foam sheathing related sections. The criteria stated here for substitution of products is based on testing and professional thermal engineering analysis by Priest & Associates.
3. T_{ign} is the time to ignition from the start of the test until the sheathing ignites. Pk. HRR is the peak heat release rate during the test.

© 2021 DRJ ENGINEERING, LLC

5.6.3 *Thermal Barrier:*

5.6.3.1 ISO RED MAX®, ISO RED MAX® WF, ISO RED MAX® GF, ISO RED MAX® LD, and ISO RED MAX® HD boards with a maximum thickness of 4" were tested in accordance with *NFPA 286* and have met the acceptance criteria of *IBC* Section 803.1.1.1[15] for use on walls or ceilings without a thermal barrier, in accordance with *IBC* Section 2603.4 and 2603.5.2.

5.6.3.2 ISO RED CI® and ISO RED CI XS shall be fully protected from the interior of the building by an approved 15-minute thermal barrier or ignition barrier as required by *IBC* Section 2603.4 and *IRC* Section R316.4, except as follows:

5.6.3.2.1 When installed in an attic, crawlspace, or other uninhabitable space, ISO RED CI® and ISO RED CI XS, at a maximum thickness of 2", are approved for use without a thermal barrier or ignition barrier. This includes, but is not limited to, knee and gable end walls.

5.6.3.2.2 Use without an approved thermal barrier or ignition barrier is limited to areas where:

5.6.3.2.2.1 ISO RED CI® and ISO RED CI XS are installed on the walls only.

5.6.3.2.2.2 Access to the space is required by *IRC* Section R807.1 or R408.4.

5.6.3.2.2.3 Entry is made only for the purposes of repairs or maintenance.

6 INSTALLATION

6.1 Installation shall comply with the manufacturer's installation instructions and this TER. In the event of a conflict between the manufacturer's installation instructions and this TER, the more restrictive shall govern.

6.1.1 See The Foam Sheathing Committee (FSC) Best Practices guide for further details.

6.2 *Installation Procedure*

6.2.1 These products may be cut to size with a utility knife, hand saw, or power saw.

6.2.2 Attachment information is provided in Table 6.

TABLE 6. ATTACHMENT INFORMATION

Application[1]	Stud Spacing[2]	Attachment Method	Fastener Spacing
Wood Framing	16" or 24"	Capped nails, capped staples, or roofing nails (~1" framing embedment)	12" perimeter 12" field
Metal Framing	16" or 24"	Corrosion-resistant self-tapping screws with 1" diameter cap or washer (~1" framing embedment)	12" perimeter 12" field
Interior Masonry or Concrete	N/A	Suitable construction adhesive or masonry fastener with 1" diameter cap or washer or combination of adhesive & mechanical fasteners (~1" embedment into substrate)	Adhesive beads spaced 16" horizontally & full perimeter Mechanical fasteners 12" perimeter and 12" field spaced 16" horizontally
Exterior Masonry or Concrete Below Grade	N/A	Granular water-draining fill	Only as required to ensure intimate contact to masonry surface or water proofed surface

SI: 1 in = 25.4 mm

1. Butt panels tightly and seal all joints where intrusion of bulk moisture or moisture vapor is undesirable with sealant and/or approved tape.
2. Panels used to resist transverse wind pressure or used as a WRB shall be installed on studs spaced a maximum of 16" o.c and all panel edges shall be located on framing or blocking.
3. For required attachments in fire rated construction, consult the manufacturer's approved fire rated assembly details and refer to Table 4.

[15] 2015 *IBC* Section 803.1.2.1

© 2021 DRJ ENGINEERING, LLC

6.2.3 Windows and doors shall be installed in accordance with the manufacturer's installation instructions.

6.2.4 Windows, door openings, and other penetrations shall be flashed in accordance with *IBC* Section 1404.4[16] and *IRC* Section R703.4.

6.2.5 Follow the manufacturer's instructions for installation of claddings and rain screens over these products.

7 Test Engineering Substantiating Data

7.1 Evaluation and analysis of testing, data, and reporting of thermal properties in accordance with *ASTM C518* performed by LaserComp.

7.2 Evaluation and analysis of testing, data, and reporting of material properties in accordance with *ASTM C1289* by Architectural Testing, Inc., an Intertek company.

7.3 Evaluation and analysis of testing, data, and reporting of surface burning characteristics performed in accordance with *ASTM E84*, conducted by Architectural Testing, Inc., an Intertek company, and Commercial Testing Inc.

7.4 Evaluation and analysis of testing, data, and reporting of fire resistance testing performed in accordance with *ASTM E119*, conducted by Architectural Testing, Inc., an Intertek company.

7.5 Evaluation and analysis of testing, data, and reporting of transverse wind pressure performed in accordance with *ASTM E330,* conducted by an ISO/IEC 17025 accredited testing laboratory under contract with Qualtim, Inc.

7.6 Evaluation and analysis testing, data, and reporting of water penetration performed in accordance with *ASTM E331,* conducted by NTA, Inc.

7.7 Evaluation and analysis of testing, data, and reporting of air permeance in accordance with *ASTM E2178,* conducted by Architectural Testing, Inc., an Intertek company.

7.8 Test reports and data for determining use in attics and crawlspaces without a thermal barrier or ignition barrier in accordance with *NFPA 286*, conducted by Intertek.

7.9 Test reports and engineering analysis of vertical and lateral fire propagation properties in accordance with *NFPA 285*, conducted by Intertek.

7.10 ISO RED CI® and ISO RED CI XS Quality Control Manuals in accordance with a third-party quality control program with inspections conducted by an approved agency.

7.11 Engineering analysis on *NFPA 285* testing performed by Priest & Associates Consulting, LLC.

7.12 Some information contained herein is the result of testing and/or data analysis by other sources which conform to *IBC* Section 1703 and relevant professional engineering law. DrJ relies on accurate data from these sources to perform engineering analysis. DrJ has reviewed and found the data provided by other professional sources to be credible.

7.13 Where appropriate, DrJ's analysis is based on design values that have been codified into law through codes and standards (e.g., *IBC, IRC, NDS®,* and *SDPWS*). This includes review of code provisions and any related test data that aids in comparative analysis or provides support for equivalency to an intended end-use application. Where the accuracy of design values provided herein is reliant upon the published properties of commodity materials (e.g., lumber, steel, and concrete), DrJ relies upon the grade mark, stamp, and/or design values provided by raw material suppliers to be accurate and conforming to the mechanical properties defined in the relevant material standard.

[16] 2015 *IBC* Section 1405.4

© 2021 DRJ ENGINEERING, LLC

8 FINDINGS

8.1 When used and installed in accordance with this TER and the manufacturer's installation instructions, the ISO RED CI® and ISO RED CI XS products are approved for the following:

8.1.1 Wind pressure resistance performance for use as part of an exterior wall covering assembly in accordance with *IBC* Section 1403.8,[17] *IRC* Section R703.3, and *ANSI/FS100*.

8.1.2 Performance in accordance with the foam plastic requirements of *IBC* Section 2603 and *IRC* Section R316.

8.1.3 Performance for use as continuous insulating sheathing in accordance with *IRC* Section N1102 and *IECC* Section C402.

8.1.4 Performance for use as a WRB in accordance with *IBC* Section 1403.2[18] and *IRC* Section R703.2.

8.1.5 Performance for use as a vapor retarder in accordance with *IBC* Section 202 and 1404.3[19] and *IRC* Section R202 and R702.7.

8.1.6 Performance for use as an air barrier in accordance with *IECC* Section C402.

8.2 When used and installed in accordance with this TER and the manufacturer's installation instructions, the ISO RED MAX®, ISO RED MAX® WF, ISO RED MAX® GF, ISO RED MAX® LD, and ISO RED MAX® HD products are approved for the following:

8.2.1 Performance in accordance with the foam plastic requirements of *IBC* Section 2603 and *IRC* Section R316.

8.2.2 Performance for use as continuous insulating sheathing in accordance with *IRC* Section N1102 and *IECC* Section C402.

8.2.3 Performance for use as a vapor retarder in accordance with *IBC* Section 202 and 1404.3[20] and *IRC* Section R202 and R702.7.

8.2.4 Performance for use as an air barrier in accordance with *IECC* Section C402.

8.2.5 Performance for use without a thermal barrier in accordance with *NFPA 286* and the acceptance criteria of *IBC* Section 803.1.1.[21]

8.3 *IBC* Section 104.11 (*IRC* Section R104.11 and *IFC* Section 104.9 are similar) states:

> **104.11 Alternative materials, design and methods of construction and equipment.** The provisions of this code are not intended to prevent the installation of any material or to prohibit any design or method of construction not specifically prescribed by this code, provided that any such alternative has been *approved*. An alternative material, design or method of construction shall be *approved* where the *building official* finds that the proposed design is satisfactory and complies with the intent of the provisions of this code, and that the material, method or work offered is, for the purpose intended, not less than the equivalent of that prescribed in this code…Where the alternative material, design or method of construction is not *approved*, the *building official* shall respond in writing, stating the reasons the alternative was not *approved*.

8.4 This product has been evaluated in the context of the codes listed in Section 2 and is compliant with all known state and local building codes. Where there are known variations in state or local codes applicable to this TER, they are listed here.

8.4.1 No known variations

---

[17] 2015 *IBC* Section 1404.8

[18] 2015 *IBC* Section 1404.2

[19] 2015 *IBC* Section 1405.3

[20] 2015 *IBC* Section 1405.3

[21] 2015 *IBC* Section 803.1.2

© 2021 DRJ ENGINEERING, LLC

9 Conditions of Use

9.1 ISO RED CI® and ISO RED CI XS shall be fully protected from the interior of the building by an approved 15-minute thermal barrier or ignition barrier where required by the applicable code, except where installed in attics and uninhabited spaces as described in Section 5.6.3.2. ISO RED MAX®, ISO RED MAX® WF, ISO RED MAX® GF, ISO RED MAX® LD, and ISO RED MAX® HD are not required to be protected by a thermal barrier when installed in accordance with 5.6.3.

9.2 These products shall not be used as a structural nailing base for claddings.

9.3 In areas where the probability of termite infestation is very heavy in accordance with *IBC* Section 2603.9 or *IRC* Section R318.4, these products must not be placed on exterior walls located within 6" (152 mm) of the ground.

9.4 Walls sheathed with these products must not be used to resist horizontal loads from concrete or masonry walls.

9.5 When using these products, the stud walls shall be braced by other materials in accordance with the applicable code.

9.6 Where required by the *building official*, also known as the authority having jurisdiction (AHJ) in which the project is to be constructed, this TER and the installation instructions shall be submitted at the time of *permit* application.

9.7 Any generally accepted engineering calculations needed to show compliance with this TER shall be submitted to the AHJ for review and approval.

9.8 Design loads shall be determined in accordance with the building code adopted by the *jurisdiction* in which the project is to be constructed and/or by the Building Designer (e.g., *owner* or *registered design professional*).

9.9 At a minimum, this product shall be installed per Section 6 of this TER.

9.10 This product is manufactured under a third-party quality control program in accordance with *IBC* Section 104.4 and 110.4 and *IRC* Section R104.4 and R109.2.

9.11 The actual design, suitability, and use of this TER, for any particular building, is the responsibility of the *owner* or the owner's authorized agent. Therefore, the TER shall be reviewed for code compliance by the *building official* for acceptance.

9.12 The use of this TER is dependent on the manufacturer's in-plant QC, the ISO/IEC 17020 third-party quality assurance program and procedures, proper installation per the manufacturer's instructions, the *building official's* inspection, and any other code requirements that may apply to demonstrate and verify compliance with the applicable building code.

10 Identification

10.1 The product(s) listed in Section 1.1 are identified by a label on the board or packaging material bearing the manufacturer's name, product name, TER number, and other information to confirm code compliance.

10.2 Additional technical information can be found at oxengineeredproducts.com.

11 Review Schedule

11.1 This TER is subject to periodic review and revision. For the most recent version of this TER, visit drjcertification.org.

11.2 For information on the current status of this TER, contact DrJ Certification.

© 2021 DRJ ENGINEERING, LLC

Issue Date: December 10, 2020
Subject to Renewal: August 1, 2022

FBC Supplement to TER 1306-02

REPORT HOLDER: Ox Engineered Products, LLC

1 Evaluation Subject

1.1 ISO RED Polyiso Foam Insulated Sheathing Products

1.1.1 ISO RED CI® Polyiso Foam Insulated Sheathing

1.1.2 ISO RED CI XS Polyiso Foam Insulated Sheathing

1.1.3 ISO RED MAX® Polyiso Foam Insulated Sheathing

1.1.4 ISO RED MAX® WF Polyiso Foam Insulated Sheathing

1.1.5 ISO RED MAX® GF Polyiso Foam Insulated Sheathing

1.1.6 ISO RED MAX® LD Polyiso Foam Insulated Sheathing

1.1.7 ISO RED MAX® HD Polyiso Foam Insulated Sheathing

2 Purpose and Scope

2.1 *Purpose*

2.1.1 The purpose of this Technical Evaluation Report (TER) supplement is to show ISO RED Polyiso Foam Insulated Sheathing Products, recognized in TER 1306-02, has also been evaluated for compliance with the codes listed below as adopted by the Florida Building Commission.

2.2 *Applicable Code Editions*

2.2.1 *FBC-B—17, 20: Florida Building Code – Building (FL 28290)*

2.2.2 *FBC-R—17, 20: Florida Building Code – Residential (FL 28290)*

3 Conclusions

3.1 ISO RED Polyiso Foam Insulated Sheathing Products, described in Sections 2.0 through 11.0 of TER 1306-02, complies with *FBC-B* Sections 202, 803.1.1, 1403.2, 1404.3, 1403.8, 2603, and 2603.5.5 and *FBC-R* Sections R202, R316, R703.2, R703.3, and R702.7 and is subject to the conditions of use described in this supplement.

4 Conditions of Use

4.1 ISO RED Polyiso Foam Insulated Sheathing Products, described in TER 1306-02, must comply with all of the following conditions:

4.1.1 All applicable sections in TER 1306-02

4.1.2 The design, installation, conditions of use, and identification of ISO RED Polyiso Foam Insulated Sheathing Products are in accordance with the 2018 *International Building Code* (*IBC*) provisions noted in TER 1306-02.

4.1.3 The design, installation, and inspections are in accordance with additional requirements of *FBC-B* Chapter 16 and Chapter 17, as applicable.