DrJ CERTIFICATION

Technical Evaluation Report™

TER 1503-03

Use of FastenMaster® FrameFAST™ Structural Wood Screw Fasteners to Provide Uplift & Lateral Resistance to Wood Trusses, Rafters, or Floor Joists Attached to the Tops of Walls

OMG®, Inc. DBA FastenMaster®

Product:

FastenMaster® FrameFAST™ Structural Wood Screw (FrameFAST™ Fasteners)

Issue Date:

May 17, 2016

Revision Date:

December 6, 2023

Subject to Renewal:

July 1, 2027

KIRK H. GRUNDAHL LICENSE No 73618 STATE OF FLORIDA PROFESSIONAL ENGINEER

12/06/2023

Kirk Grundahl Digitally signed by Kirk Grundahl Date: 2023.12.06 13:10:13 -06'00'

Use the QR code to access the most recent version or a sealed copy of this Technical Evaluation Report (TER) at drjcertification.org.

COMPANY INFORMATION:	ADDITIONAL LISTEES:

OMG®, Inc. DBA FastenMaster®
153 Bowles Rd
Agawam, MA 01001-2908

P: 413-789-0252

mguthrie@omginc.com

www.fastenmaster.com

DIVISION: 06 00 00 - WOOD, PLASTICS AND COMPOSITES

SECTION: 06 00 90 - Wood and Plastic Fastenings

1 Innovative Products Evaluated[1,2]

1.1 FastenMaster® FrameFAST™ Structural Wood Screw (FrameFAST™ Fasteners)

2 Applicable Codes and Standards[3,4]

2.1 *Codes*

2.1.1 *IBC—15, 18, 21: International Building Code®*

2.1.2 *IRC—15, 18, 21: International Residential Code®*

2.1.3 *FBC-B—20, 23: Florida Building Code – Building[5] (FL #21662)*

2.1.4 *FBC-R—20, 23: Florida Building Code – Residential[5] (FL #21662)*

2.2 *Standards and Referenced Documents*

2.2.1 *ANSI/AWC NDS: National Design Specification (NDS) for Wood Construction*

2.2.2 *ASTM A153: Standard Specification for Zinc Coating (Hot-Dip) on Iron and Steel Hardware*

2.2.3 *ASTM D1761: Standard Test Methods for Mechanical Fasteners in Wood*

2.2.4 *ASTM D2395: Standard Test Methods for Density and Specific Gravity (Relative Density) of Wood and Wood-Based Materials*

---

1 For more information, visit drjcertification.org or call us at 608-310-6748.

2 24 CFR 3280.2 "Listed or certified" means included in a list published by a nationally recognized testing laboratory, inspection agency, or other organization concerned with product evaluation that maintains periodic inspection of production of listed equipment or materials, and whose listing states either that the equipment or material meets nationally recognized standards or has been tested and found suitable for use in a specified manner. **Listed**. Equipment, materials, products or services included in a list published by an organization acceptable to the building official and concerned with evaluation of products or services that maintains periodic inspection of production of listed equipment or materials or periodic evaluation of services and whose Listing states either that the equipment, material, product or service meets identified standards or has been tested and found suitable for a specified purpose. **Labeled.** Equipment, materials or products to which has been affixed a label, seal, symbol or other identifying mark of a nationally recognized testing laboratory, approved agency or other organization concerned with product evaluation that maintains periodic inspection of the production of the above-labeled items and whose labeling indicates either that the equipment, material or product meets identified standards or has been tested and found suitable for a specified purpose.

3 This Listing is a code defined research report, which is also known as a duly authenticated report, provided by an approved agency (see IBC Section 1703.1) and/or an approved source (see IBC Section 1703.4.2). An approved agency is "approved" as an approved agency when it is ANAB accredited. DrJ Engineering, LLC (DrJ) is listed in the ANAB directory). A professional engineer is "approved" as an approved source when that professional engineer is properly licensed to transact engineering commerce. Where sealed by a professional engineer, it is also a duly authenticated report certified by an approved source. (i.e., Registered Design Professional). DrJ is an ANAB accredited product certification body.

4 Unless otherwise noted, all references in this Listing are from the 2021 version of the codes and the standards referenced therein. This material, product, design, service and/or method of construction also complies with the 2000-2021 versions of the referenced codes and the standards referenced therein.

5 All references to FBC-B and FBC-R are the same as the 2021 IBC and 2021 IRC, respectively, unless otherwise noted in the supplement at the end of this report.

© 2023 DrJ Engineering, LLC

2.2.5 *ASTM D4442: Standard Test Methods for Direct Moisture Content Measurement of Wood and Wood-Based Materials*

2.2.6 *ASTM F606: Standard Test Methods for Determining the Mechanical Properties of Externally and Internally Threaded Fasteners, Washers, Direct Tension Indicators, and Rivets*

2.2.7 *ASTM F1575: Standard Test Method for Determining Bending Yield Moment of Nails*

2.2.8 *AWC TR 12: General Dowel Equations for Calculating Lateral Connection Values*

3 Performance Evaluation

3.1 Tests, testing, test reports, research reports, duly authenticated reports and related engineering evaluations are defined as intellectual property and/or trade secrets and protected by Defend Trade Secrets Act 2018 (DTSA).[6]

3.2 Testing and/or inspections conducted for this TER were performed an ISO/IEC 17025 accredited testing laboratory,[7] an ISO/IEC 17020 accredited inspection body,[8] which are internationally recognized accreditations through International Accreditation Forum (IAF), and/or a licensed Registered Design Professional (RDP).

3.3 FrameFAST™ fasteners were evaluated, using assembly tests to derive allowable design values, as an alternate means of attaching metal plate connected wood trusses, rafters, or floor joists to the tops of walls for the purpose of providing uplift and lateral load resistance. The following conditions were evaluated:

3.3.1 Withdrawal strength of FrameFAST™ fasteners for use as an alternative to toenail connections, metal hurricane and seismic clips/straps, or nails in tension (uplift) loaded applications.

3.3.2 Shear strength of FrameFAST™ fasteners for use as an alternative to toenail connections, hurricane and seismic clips/straps, or nails in shear (lateral) loaded applications either parallel or perpendicular to wood grain.

3.3.3 Head pull through strength of FrameFAST™ fasteners for use as an alternative to toenail connections, hurricane and seismic clips/straps, or nails in tension (uplift) loaded applications.

3.4 Any building code and/or accepted engineering evaluations (i.e. research reports, duly authenticated reports, etc.) that are conducted for this Listing were performed by DrJ Engineering, LLC (DrJ), an ISO/IEC 17065 accredited certification body and a professional engineering company operated by RDPs / approved sources. DrJ is qualified[9] to practice product and code compliance services within its scope of accreditation and engineering expertise, respectively.

---

[6] https://www.law.cornell.edu/uscode/text/18/part-I/chapter-90. Whoever, with intent to convert a trade secret, that is related to a product or service used in or intended for use in or intended for use in interstate or foreign commerce, to the economic benefit or anyone other than the owner thereof, and intending or knowing that the offense will injure any owner of that trade secret, knowingly (1) steals, or without authorization appropriates, takes, carries away, or conceals, or by fraud, artifice, or deception obtains such information; (2) without authorization copies, duplicates, sketches, draws, photographs, downloads, uploads, alters, destroys, photocopies, replicates, transmits, delivers, sends, mails, communicates, or conveys such information; (3) receives, buys, or possesses such information, knowing the same to have been stolen or appropriated, obtained, or converted without authorization; (4) attempts to commit any offense described in paragraphs (1) through (3); or (5) conspires with one or more other persons to commit any offense described in paragraphs (1) through (3), and one or more of such persons do any act to effect the object of the conspiracy, shall, except as provided in subsection (b), be fined under this title or imprisoned not more than 10 years, or both. (b) Any organization that commits any offense described in subsection (a) shall be fined not more than the greater of $5,000,000 or 3 times the value of the stolen trade secret to the organization, including expenses for research and design and other costs of reproducing the trade secret that the organization has thereby avoided.
The federal government and each state have a public records act. As the National Society of Professional Engineers states, "Engineers shall not disclose, without consent, confidential information concerning the business affairs or technical processes of any present or former client or employer, or public body on which they serve." Therefore, to protect intellectual property (IP) and TS, and to achieve compliance with public records and trade secret legislation, requires approval through the use of Listings, certified reports, technical evaluation reports, duly authenticated reports and/or research reports prepared by approved agencies and/or approved sources.

[7] Internationally recognized accreditations are performed by members of the International Accreditation Forum (IAF). Accreditation Body and Regional Accreditation Group Members of IAF are admitted to the IAF MLA only after a stringent evaluation of their operations by a peer evaluation team, which is charged to ensure that the applicant complies fully with both international standards and IAF requirements. Once an accreditation body is a signatory of the IAF MLA, it is required to recognise certificates and validation and verification statements issued by conformity assessment bodies accredited by all other signatories of the IAF MLA, with the appropriate scope.

[8] Ibid.

[9] Qualification is performed by a legislatively defined Accreditation Body. ANSI National Accreditation Board (ANAB) is the largest independent accreditation body in North America and provides services in more than 75 countries. DrJ is an ANAB accredited product certification body.

© 2023 DrJ Engineering, LLC

3.5 Engineering evaluations are conducted with DrJ's ANAB accredited ICS code scope, which are also its areas of professional engineering competence.

3.6 Any regulation specific issues not addressed in this section are outside the scope of this TER.

4 Product Description and Materials

4.1 The products evaluated in this TER are shown in Figure 1.

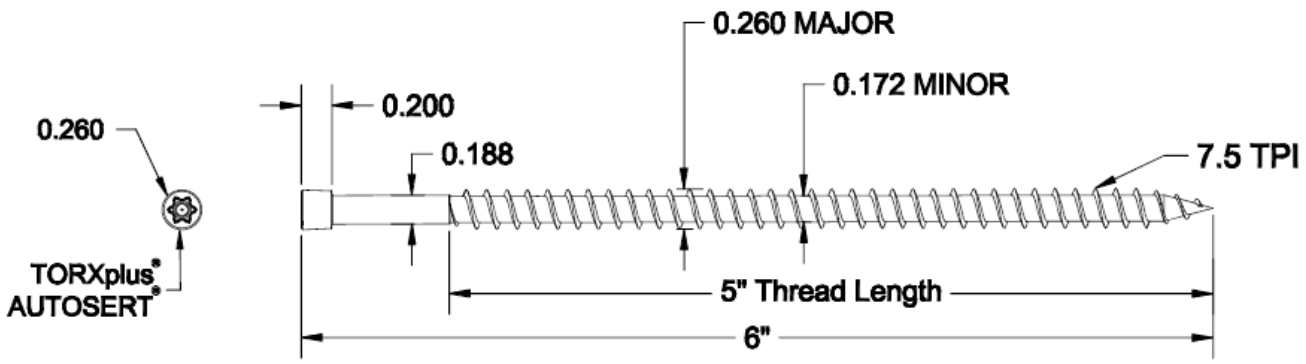

Figure 1. FrameFAST™ Fastener Specification

4.2 FrameFAST™ fasteners are manufactured with modified 10B21 carbon steel wire conforming to the manufacturer specifications and are coated with a proprietary finish.

4.3 FrameFAST™ fasteners are manufactured using a standard cold-formed process followed by a heat-treating process.

4.4 Fasteners are approved for use in fire-retardant-treated lumber, provided the conditions set forth by the fire-retardant-treated lumber manufacturer are met, including appropriate strength reductions.

4.5 FrameFAST™ fasteners are approved for use in interior and exterior conditions and in pressure-treated wood.

4.6 In-plant quality control procedures, under which the FrameFAST™ fasteners are manufactured, are audited through an inspection process performed by an approved agency.

4.7 The FrameFAST™ fasteners evaluated in this TER are presented in Table 1.

Table 1. Fastener Specifications

Fastener	Fastener Designation	Fastener Length[1] (in)	Thread Length[1] (in)	Head Diameter (in)	Head Height	Shank Diameter[2] (in)	Minor Thread (Root) Diameter (in)	Major Thread Diameter (in)	Bending Yield,[2] f_{yb} (psi)	Allowable Fastener Strength[2] (lbf)	
										Tensile	Shear
FrameFAST™	FMFF006	6	5	0.260	0.200	0.188	0.172	0.260	166,600	980	980

SI: 1 in = 25.4 mm, 1 psi = 0.00689 MPa

1. Fastener length is measured from the top of the head to the tip. Thread length includes tapered tip (Figure 1).
2. Bending yield, tension, and shear values determined at minor root diameter.

Confidential Intellectual Property is protected by Defend Trade Secrets Act 2016,
© 2023 DrJ Engineering, LLC

5 Applications

5.1 FrameFAST™ fasteners are used to attach minimum 1½" wide wood trusses, sawn lumber rafters, or floor joists to wood walls that meet the requirements of IBC Section 2308 or IRC Section R602 for wood structural framing members. The fasteners provide resistance to uplift or lateral loads applied parallel and/or perpendicular to the wall or structural framing member.

5.1.1 Walls shall consist, at a minimum, of a single or double top plate designed in accordance with IBC Section 2308.5.3.2 or IRC Section R602.3.2. More than two top plates are permitted.

5.1.2 See Table 2 for the design procedure and allowable design values for FrameFAST™ fasteners.

5.1.3 See Section 6 for installation requirements.

5.1.4 FrameFAST™ fasteners are used in buildings requiring design in accordance with IBC Section 1609 or wind analysis in accordance with IRC Section R301.2.1.

5.1.5 FrameFAST™ fasteners are used in buildings requiring design in accordance with IBC Section 1613 or seismic analysis in accordance with IRC Section R301.2.2.

5.2 *Design Concepts and Allowable Design Loads*

5.2.1 Allowable design loads for uplift and lateral resistance (parallel [F1] and perpendicular [F2]) to the plane of the wall or structural member as shown in Figure 2, are provided in Table 2 for FrameFAST™ fasteners. Allowable design loads are applicable if a fastener is installed in accordance with the procedures described in Section 6.

5.2.1.1 Blocking requirements are shown in Figure 3 and Figure 4.

5.2.1.2 An example for calculating reduced uplift values based on embedment depth is shown in Figure 5.

5.2.1.3 An example top plate applications are shown in Figure 7, Figure 8, and Figure 9.

5.2.1.4 A header to truss application is shown in Figure 10.

5.2.1.5 Allowable uplift values for a two-screw connection, as detailed in Figure 6, are provided in Table 3.

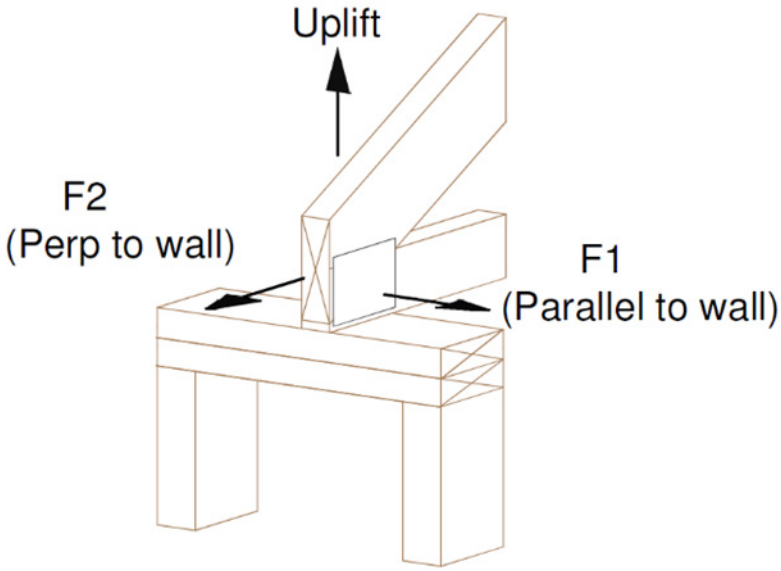

Figure 2. Uplift and Lateral Load Orientations

© 2023 DrJ Engineering, LLC

Table 2. FrameFAST™ Fasteners Allowable Loads for Uplift & Lateral Resistance

Fastener Designation	Minimum Penetration into Truss/Rafter/Wood Structural Support[7] (in)	Species Group (Specific Gravity)[1,2,3]	Uplift[4,5] (lbf)	Lateral[4] (lbf)		
				F1 Parallel to Wall (Without Blocking)	F1 Parallel to Wall (With Blocking)[6]	F2 Perpendicular to Wall
6" FMFF006	2 1/2	So. Pine (0.55)	690	285	650	485
		Douglas Fir-Larch (0.50)	655	300	600	455
		Spruce-Pine-Fir/Hem-Fir (0.42)	595	330	520	400

SI: 1 in = 25.4 mm, 1 lb = 4.45 N

1. Wood truss, rafter, or floor joist members shall be a minimum of 2" nominal thickness. Design of truss, rafter, or floor joist members is by others.
2. Equivalent specific gravity of structural composite lumber (SCL) shall be equal to or greater than the specific gravities provided in this table. Refer to product information from SCL manufacturer.
3. For applications involving members with different specific gravities, use the allowable load corresponding to the lowest specific gravity.
4. No further duration of load increases permitted.
5. Use reduction factor of 0.80 when connecting each ply of multiply trusses to the top plate.
6. See Figure 3 and Figure 4 for blocking requirements between trusses, rafter, or floor joists.
7. For embedment depths into main member of less than 2 1/2" (full penetration), reduced allowable uplift shall be calculated using Section 5.2.3 and Figure 5 for embedment depths greater than 2 1/2", no further increases allowed.

5.2.2 In the F1 direction, design loads are given for assemblies with and without blocking between the roof or floor trusses. Blocking requirements are shown in Figure 3 and Figure 4.

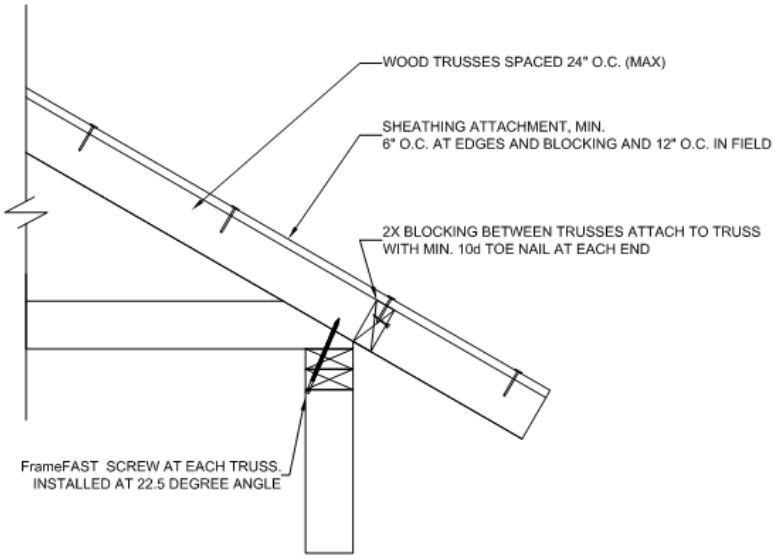

Figure 3. Truss Blocking Detail

Confidential Intellectual Property is protected by Defend Trade Secrets Act 2016,
© 2023 DrJ Engineering, LLC

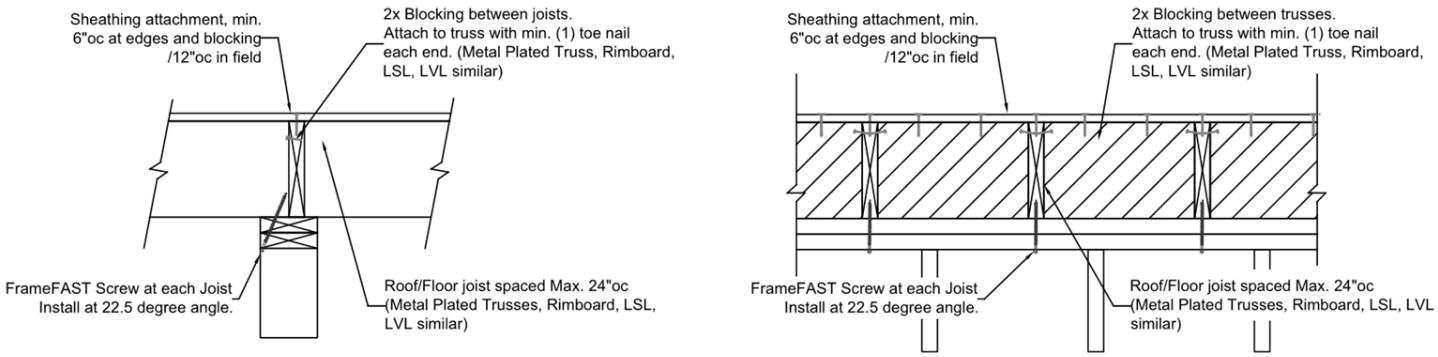

Figure 4. Section View of Roof/Floor Joist Blocking

5.2.3 For applications where the embedment depth into the main member is less than $2^1/_2$" (full penetration), calculate the reduced allowable uplift per Figure 5.

5.2.3.1 The reduced thread embedment length does not include the tapered tip.

5.2.3.2 For embedment depths greater than $2^1/_2$", no further increases are allowed.

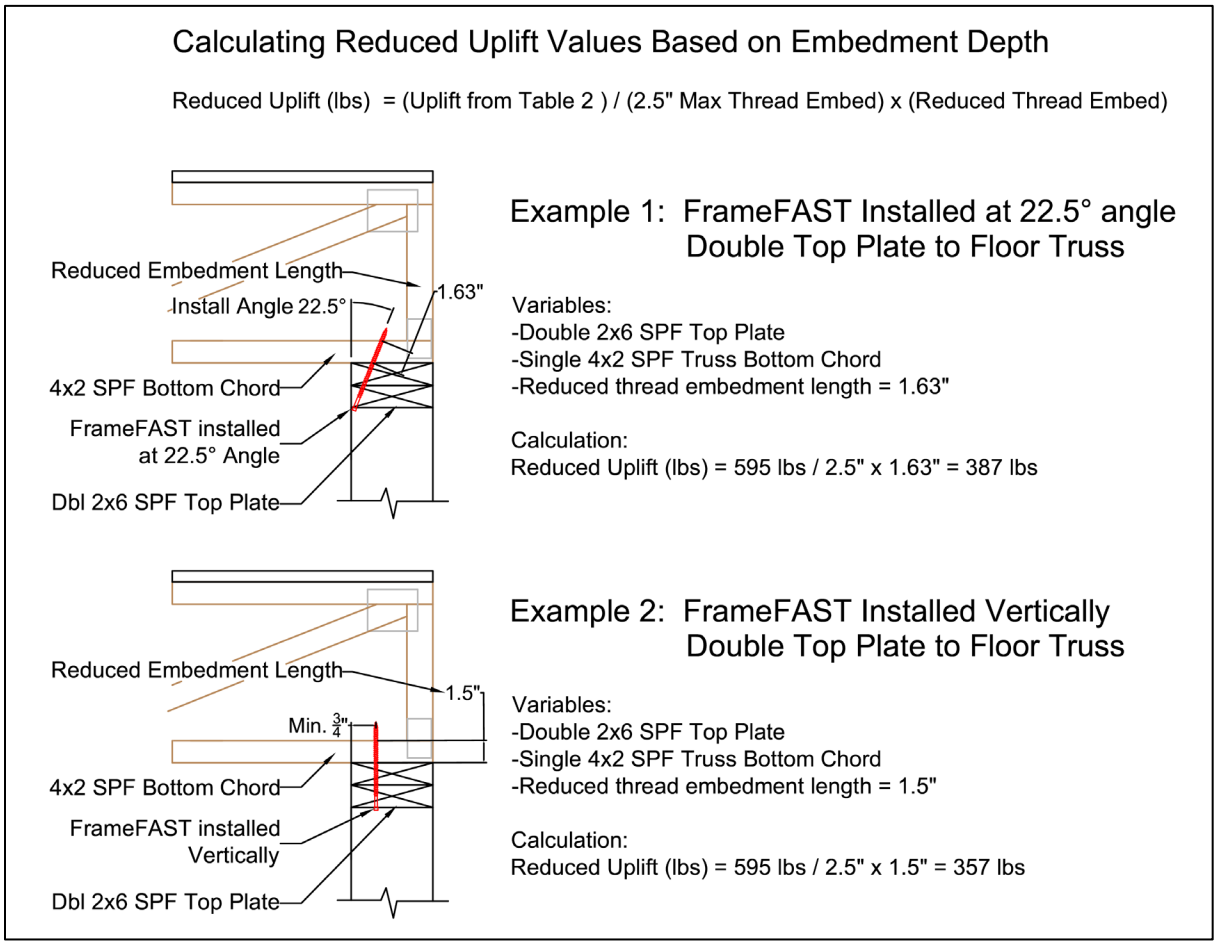

Figure 5. Calculation Example for Reducing Uplift Values Based on Embedment Depth

Confidential Intellectual Property is protected by Defend Trade Secrets Act 2016,
© 2023 DrJ Engineering, LLC

5.2.4 For applications where two FrameFAST™ screws are installed as shown in Figure 6, allowable loads for the pair of screws are per Table 3.

5.2.4.1 The values in Table 3 are applicable to 2x4 and 2x6 walls.

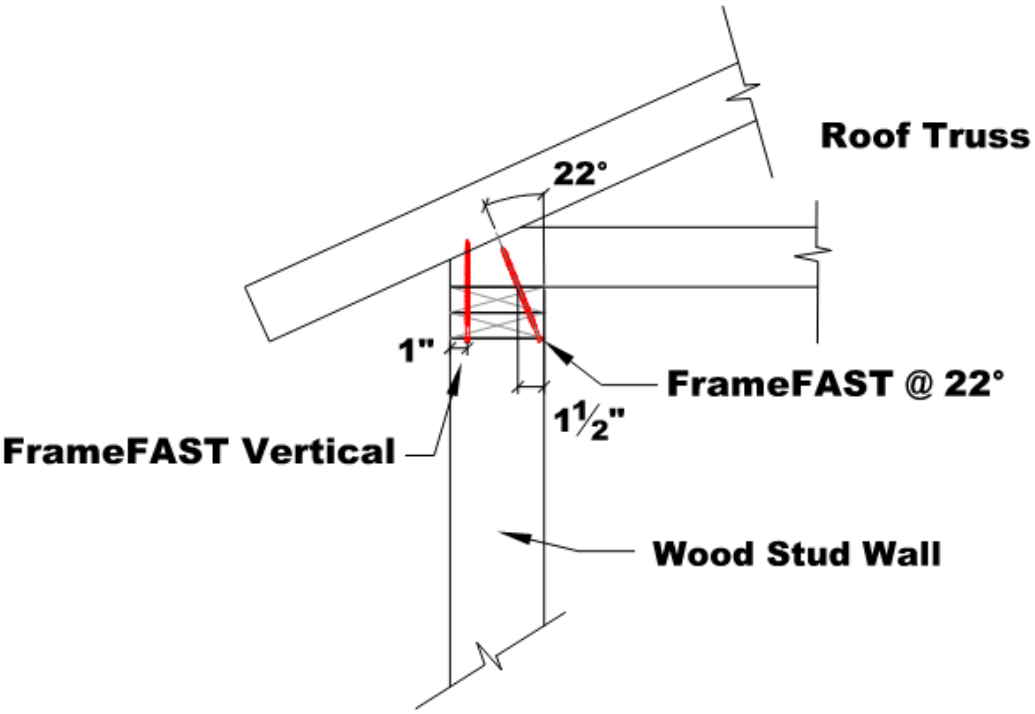

Figure 6. Two-FrameFAST™ Connection

Table 3. Allowable Uplift Loads for Two-FrameFAST™ Connection[5]

Fastener Designation	Species Group (Specific Gravity)[1,2,3]	Uplift[4,5] (lbf)	Lateral[4] (lbf)		
			F1 Parallel to Wall (Without Blocking)	F1 Parallel to Wall (With Blocking)[6]	F2 Perpendicular to Wall
6" FMFF006	So. Pine (0.55)	950	500	755	640
	Douglas Fir-Larch (0.50)	850	465	670	570
	Spruce-Pine-Fir/Hem-Fir (0.42)	655	385	520	435

SI: 1 in = 25.4 mm, 1 lb = 4.45 N

1. Wood truss, rafter, or floor joist members shall be a minimum of 2" nominal thickness. Design of truss, rafter, or floor joist members is by others.
2. Equivalent specific gravity of structural composite lumber (SCL) shall be equal to or greater than the specific gravities provided in this table. Refer to product information from SCL manufacturer.
3. For applications involving members with different specific gravities, use the allowable load corresponding to the lowest specific gravity.
4. No further duration of load increases permitted.
5. Use reduction factor of 0.80 when connecting each ply of multiply trusses to the top plate.
6. See Figure 6 for connection detail requirements.

Confidential Intellectual Property is protected by Defend Trade Secrets Act 2016,
© 2023 DrJ Engineering, LLC

5.2.5 Where it is anticipated that loads will be applied to a single fastener simultaneously in more than one direction, additional evaluation is required to account for the combined effect of these loads using accepted engineering practice.

5.2.5.1 Consult a professional engineer, as needed, for complex design conditions.

5.3 Where the application falls outside of the performance evaluation, conditions of use and/or installation requirements set forth herein, alternative techniques shall be permitted in accordance with accepted engineering practice and experience. This includes but is not limited to the following areas of engineering: mechanics or materials, structural, building science, and fire science.

6 Installation

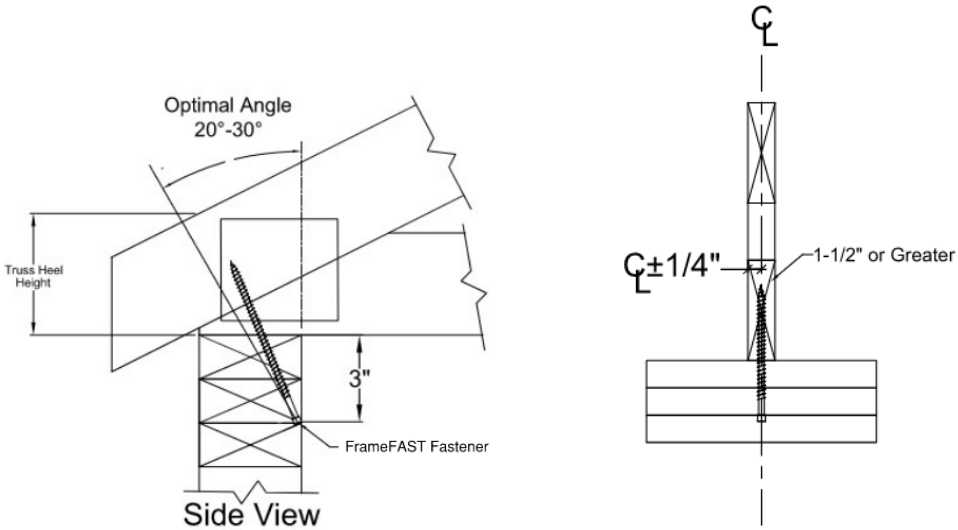

Figure 7. Installation of FrameFAST™ Fasteners on Wood Truss or Rafter to Triple Top Plate

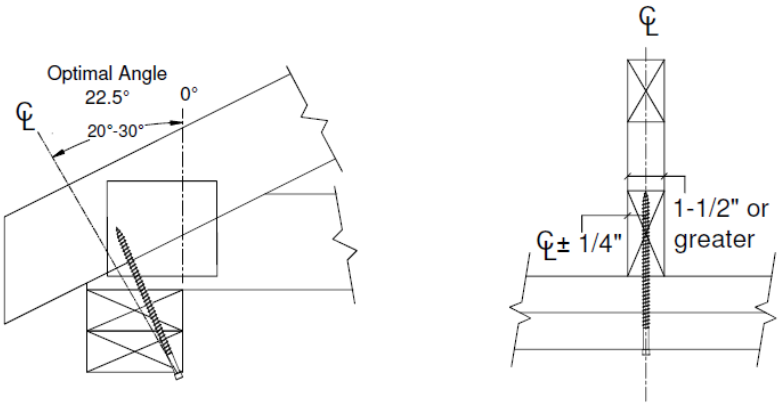

Figure 8. Installation of FrameFAST™ Fasteners on Wood Truss or Rafter to Double Top Plate

© 2023 DrJ Engineering, LLC

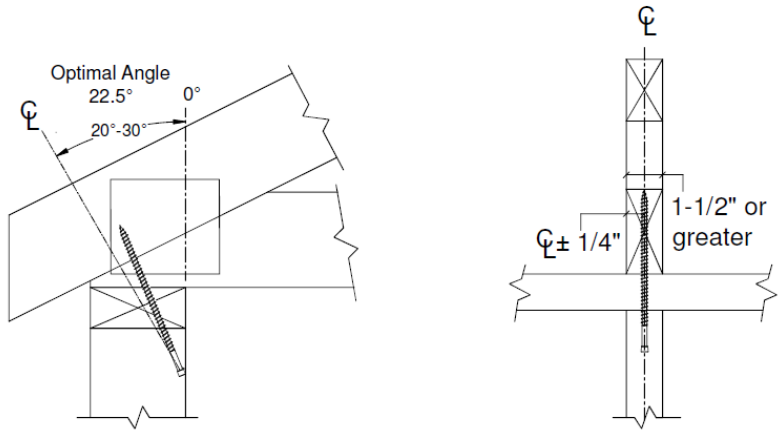

Figure 9. Installation of FrameFAST™ Fasteners on Wood Truss or Rafter to Single Top Plate

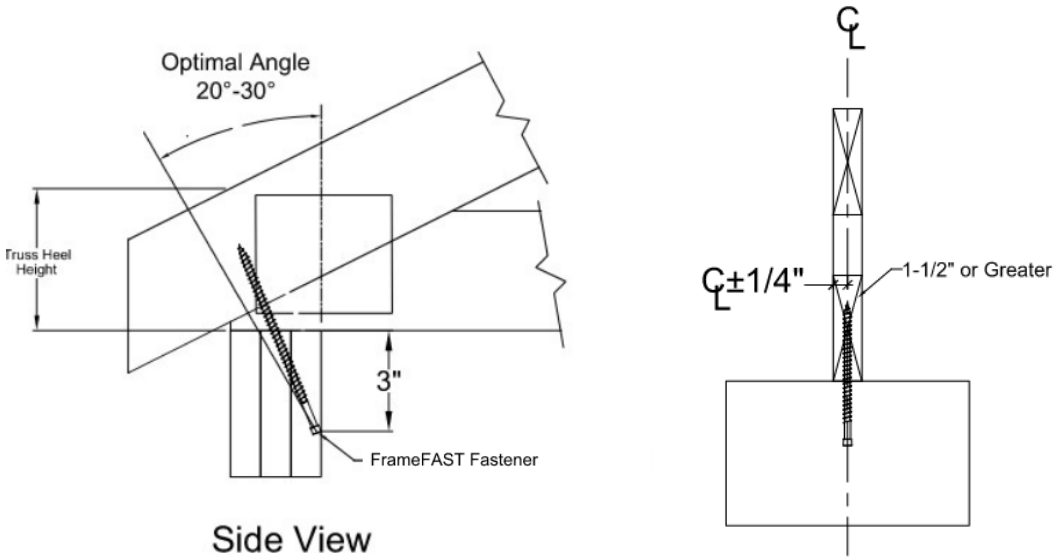

Figure 10. Installation of FrameFAST™ Fasteners on Wood Truss or Rafter to Header

6.1 Installation shall comply with the approved construction documents, the manufacturer installation instructions, this TER and the applicable building code.

6.2 In the event of a conflict between the manufacturer installation instructions and this TER, the more restrictive shall govern.

6.3 Select a FrameFAST™ fastener with a length sufficient to fully embed $2^1/_2$" of the fastener length into the truss or rafter. See Figure 7, Figure 8, and Figure 9 for guidance.

6.4 Install one (1) FrameFAST™ fastener upward through the wall top plates or wood structural framing member at the bottom corner of the top plates and into the center of the wood truss or rafter. The fastener shall be installed at a 20° - 30° angle and shall penetrate the wood truss or rafter within $^1/_4$" of the centerline. See Figure 7, Figure 8, and Figure 9.

© 2023 DrJ Engineering, LLC

6.5 If the wood truss or rafter is located directly over a top plate splice, offset the fastener 1/4" to one side of the splice and insert the fastener upward through the wall top plates or wood structural framing member at the bottom corner of the top plates and into the center of the truss or rafter. The fastener shall be installed at a 20° - 30° angle.

6.6 Use a 1/2" low RPM/high torque drill to drive the fastener head flush with the surface of the wall framing or wood structural framing member.

7 Substantiating Data

7.1 Testing has been performed under the supervision of a professional engineer and/or under the requirements of ISO/IEC 17025 as follows:

7.1.1 Uplift and lateral resistance testing in accordance with ASTM D1761

7.1.2 Fastener bending yield testing in accordance with ASTM F1575

7.1.3 Fastener shear strength testing in accordance with ASTM F1575

7.1.4 Fastener tensile strength testing in accordance with ASTM F606

7.2 Information contained herein may include the result of testing and/or data analysis by sources that are approved agencies (i.e., ANAB accredited agencies), approved sources (i.e., RDPs), and/or professional engineering regulations. Accuracy of external test data and resulting analysis is relied upon.

7.3 Where pertinent, testing and/or engineering analysis is based upon provisions that have been codified into law through state or local adoption of codes and standards. The developers of these codes and standards are responsible for the reliability of published content. DrJ's engineering practice may use a code-adopted provision as the control sample. A control sample versus a test sample establishes a product as being equivalent to the code-adopted provision in terms of quality, strength, effectiveness, fire resistance, durability, and safety.

7.4 The accuracy of the provisions provided herein may be reliant upon the published properties of raw materials, which are defined by the grade mark, grade stamp, mill certificate, Listings, certified reports, duly authenticated reports from approved agencies, and research reports prepared by approved agencies and/or approved sources provided by the suppliers of products, materials, designs, assemblies and/or methods of construction. These are presumed to be minimum properties and relied upon to be accurate. The reliability of DrJ's engineering practice, as contained in this TER, may be dependent upon published design properties by others.

7.5 Testing and engineering analysis: The strength, rigidity and/or general performance of component parts and/or the integrated structure are determined by suitable tests that simulate the actual conditions of application that occur and/or by accepted engineering practice and experience.[10]

7.6 Where additional condition of use and/or code compliance information is required, please search for FastenMaster® FrameFAST™ Structural Wood Screw (FrameFAST™ Fasteners) on the DrJ Certification website.

[10] See Code of Federal Regulations (CFR) Title 24 Subtitle B Chapter XX Part 3280 for definition.

Confidential Intellectual Property is protected by Defend Trade Secrets Act 2016,
© 2023 DrJ Engineering, LLC

8 Findings

8.1 As delineated in Section 3, FastenMaster® FrameFAST™ Structural Wood Screw (FrameFAST™ Fasteners) have performance characteristics that were tested and/or meet pertinent standards and is suitable for use pursuant to its specified purpose.

8.2 When used and installed in accordance with this TER and the manufacturer installation instructions, FastenMaster® FrameFAST™ Structural Wood Screw (FrameFAST™ Fasteners) shall be approved for the following applications:

8.2.1 Toenail connections, metal hurricane and seismic clips/straps, or nails to resist the uplift and lateral loads due to wind and seismic conditions as provided for in Table 2.

8.2.2 Provide resistance to uplift loads due to wind negative pressure applied from the truss above lifting up on the top plate of the wall, per Table 2 and Table 3.

8.2.3 Provide resistance to lateral loads due to wind or seismic loads applied parallel or perpendicular to the wall, per Table 2.

8.3 Any application specific issues not addressed herein can be engineered by an RDP. Assistance with engineering is available from OMG®, Inc. DBA FastenMaster®.

8.4 IBC Section 104.11 (IRC Section R104.11 and IFC Section 104.10[11] are similar) in pertinent part states:

> **104.11 Alternative materials, design and methods of construction and equipment.** The provisions of this code are not intended to prevent the installation of any material or to prohibit any design or method of construction not specifically prescribed by this code. Where the alternative material, design or method of construction is not approved, the building official shall respond in writing, stating the reasons the alternative was not approved.

8.5 **Approved**:[12] Building codes require that the building official shall accept duly authenticated reports[13] or research reports[14] from approved agencies and/or approved sources (i.e., licensed RDP) with respect to the quality and manner of use of new products, materials, designs, services, assemblies, or methods of construction.

8.5.1 Acceptability of an approved agency, by a building official, is performed by verifying that the agency is accredited by a recognized accreditation body of the International Accreditation Forum (IAF).

8.5.2 Acceptability of a licensed RDP, by a building official, is performed by verifying that the RDP and/or their business entity is listed by the licensing board of the relevant jurisdiction.

8.5.3 Federal law, Title 18 US Code Section 242, requires that where the alternative product, material, service, design, assembly, and/or method of construction is not approved, the building official shall respond in writing, stating the reasons why the alternative was not approved, as denial without written reason deprives a protected right to free and fair competition in the marketplace.

---

[11] 2018 IFC Section 104.9

[12] Approved is an adjective that modifies the noun after it. For example, Approved Agency means that the Agency is accepted officially as being suitable in a particular situation. This example conforms to IBC/IRC/IFC Section 201.4 where the building code authorizes sentences to have an ordinarily accepted meaning such as the context implies.

[13] https://up.codes/viewer/wyoming/ibc-2021/chapter/17/special-inspections-and-tests#1707.1

[14] https://up.codes/viewer/wyoming/ibc-2021/chapter/17/special-inspections-and-tests#1703.4.2

Confidential Intellectual Property is protected by Defend Trade Secrets Act 2016,
© 2023 DrJ Engineering, LLC

8.6 DrJ is an engineering company, employs RDPs and is an ISO/IEC 17065 ANAB-Accredited Product Certification Body – Accreditation #1131.

8.7 Through ANAB accreditation and the IAF Multilateral Agreements, this TER can be used to obtain product approval in any jurisdiction or country that has IAF MLA Members & Signatories to meet the Purpose of the MLA – "*certified once, accepted everywhere*." IAF specifically says, "*Once an accreditation body is a signatory of the IAF MLA, it is required to recognise certificates and validation and verification statements issued by conformity assessment bodies accredited by all other signatories of the IAF MLA, with the appropriate scope*."[15]

9 Conditions of Use

9.1 Material properties shall not fall outside the boundaries defined in Section 3.

9.2 As defined in Section 3, where material and/or engineering mechanics properties are created for load resisting design purposes, the resistance to the applied load shall not exceed the ability of the defined properties to resist those loads using the principles of accepted engineering practice.

9.3 For conditions not covered in this TER, connections shall be designed in accordance with accepted engineering practice.

9.4 When required by adopted legislation and enforced by the building official, also known as the authority having jurisdiction (AHJ) in which the project is to be constructed:

9.4.1 Any calculations incorporated into the construction documents shall conform to accepted engineering practice, and, when prepared by an approved source, shall be approved when requirements of adopted legislation are met.

9.4.2 This TER and the installation instructions shall be submitted at the time of permit application.

9.4.3 These products have an internal quality control program and a third-party quality assurance program.

9.4.4 At a minimum, these products shall be installed per Section 6 of this TER.

9.4.5 The review of this TER, by the AHJ, shall be in compliance with IBC Section 104 and IBC Section 105.4.

9.4.6 These products have an internal quality control program and a third party quality assurance program in accordance with IBC Section 104.4, IBC Section 110.4, IBC Section 1703, IRC Section R104.4 and IRC Section R109.2.

9.4.7 The application of these products in the context of this TER is dependent upon the accuracy of the construction documents, implementation of installation instructions, inspection as required by IBC Section 110.3, IRC Section R109.2 and any other regulatory requirements that may apply.

9.5 The approval of this TER by the AHJ shall comply with IBC Section 1707.1, where legislation states in pertinent part, "*the building official shall accept duly authenticated reports from approved agencies in respect to the quality and manner of use of new materials or assemblies as provided for in Section 104.11*", all of IBC Section 104, and IBC Section 105.4.

9.6 Design loads shall be determined in accordance with the building code adopted by the jurisdiction in which the project is to be constructed and/or by the building designer (i.e., owner or RDP).

9.7 The actual design, suitability, and use of this TER, for any particular building, is the responsibility of the owner or the owner's authorized agent.

[15] https://iaf.nu/en/about-iaf-mla/#:~:text=required%20to%20recognise

Confidential Intellectual Property is protected by Defend Trade Secrets Act 2016,
© 2023 DrJ Engineering, LLC

10 Identification

10.1 The products listed in Section 1.1 are identified by a label on the board or packaging material bearing the manufacturer name, product name, TER number, and other information to confirm code compliance.

10.2 Additional technical information can be found at fastenmaster.com.

11 Review Schedule

11.1 This TER is subject to periodic review and revision. For the most recent version, visit drjcertification.org.

11.2 For information on the status of this TER, contact DrJ Certification.

12 Approved for Use Pursuant to US and International Legislation Defined in Appendix A

12.1 FastenMaster® FrameFAST™ Structural Wood Screw (FrameFAST™ Fasteners) are included in this TER published by an approved agency that is concerned with evaluation of products or services, maintains periodic inspection of the production of listed materials or periodic evaluation of services, and whose TER Listing states either that the material, product, or service meets identified standards or has been tested and found suitable for a specified purpose. This TER meets the legislative intent and definition of being acceptable to the AHJ.

Confidential Intellectual Property is protected by Defend Trade Secrets Act 2016,
© 2023 DrJ Engineering, LLC

Appendix A

1 Legislation that Authorizes AHJ Approval

1.1 **Fair Competition**: State legislatures have adopted Federal regulations for the examination and approval of building code referenced and alternative products, materials, designs, services, assemblies and/or methods of construction that:

1.1.1 Advance Innovation,

1.1.2 Promote competition so all businesses have the opportunity to compete on price and quality in an open market on a level playing field unhampered by anticompetitive constraints, and

1.1.3 Benefit consumers through lower prices, better quality, and greater choice.

1.2 **Adopted Legislation**: The following local, state, and federal regulations affirmatively authorize FastenMaster® FrameFAST™ Structural Wood Screw (FrameFAST™ Fasteners) to be approved by AHJs, delegates of building departments, and/or delegates of an agency of the federal government:

1.2.1 Interstate commerce is governed by the Federal Department of Justice to encourage the use of innovative products, materials, designs, services, assemblies and/or methods of construction. The goal is to "protect economic freedom and opportunity by promoting free and fair competition in the marketplace."

1.2.2 Title 18 US Code Section 242 affirms and regulates the right of individuals and businesses to freely and fairly have new products, materials, designs, services, assemblies and/or methods of construction approved for use in commerce. Disapproval of alternatives shall be based upon non-conformance with respect to specific provisions of adopted legislation, and shall be provided in writing stating the reasons why the alternative was not approved, with reference to the specific legislation violated.

1.2.3 The federal government and each state have a public records act. In addition, each state also has legislation that mimics the federal Defend Trade Secrets Act 2018 (DTSA).

1.2.3.1 Compliance with public records and trade secret legislation requires approval through the use of listings, certified reports, Technical Evaluation Reports, duly authenticated reports and/or research reports prepared by approved agencies and/or approved sources.

1.2.4 For new materials[16] that are not specifically provided for in any building code, the design strengths and permissible stresses shall be established by tests, where suitable load tests simulate the actual loads and conditions of application that occur.

1.2.5 The design strengths and permissible stresses of any structural material shall conform to the specifications and methods of design using accepted engineering practice.[17]

1.2.6 The commerce of approved sources (i.e., registered PEs) is regulated by professional engineering legislation. Professional engineering commerce shall always be approved by AHJs, except where there is evidence, provided in writing, that specific legislation has been violated by an individual registered PE.

1.2.7 The AHJ shall accept duly authenticated reports from approved agencies in respect to the quality and manner of use of new materials or assemblies as provided for in IBC Section 104.11.[18]

[16] https://up.codes/viewer/wyoming/ibc-2021/chapter/17/special-inspections-and-tests#1706.2

[17] IBC 2021, Section 1706.1 Conformance to Standards

[18] IBC 2021, Section 1707 Alternative Test Procedure, 1707.1 General

© 2023 DrJ Engineering, LLC

1.3 **Approved**[19] **by Los Angeles**: The Los Angeles Municipal Code (LAMC) states in pertinent part that the provisions of LAMC are not intended to prevent the use of any material, device, or method of construction not specifically prescribed by LAMC. The Department shall use Part III, Recognized Standards in addition to Part II, Uniform Building Code Standards of Division 35, Article 1, Chapter IX of the LAMC in evaluation of products for approval where such standard exists for the product or the material and may use other approved standards, which apply. Whenever tests or certificates of any material or fabricated assembly are required by Chapter IX of the LAMC, such tests or certification shall be made by a testing agency approved by the Superintendent of Building to conduct such tests or provide such certifications. The testing agency shall publish the scope and limitation(s) of the listed material or fabricated assembly.[20] The Superintendent of Building roster of approved testing agencies is provided by the Los Angeles Department of Building and Safety (LADBS). The Center for Building Innovation (CBI) Certificate of Approval License is TA24945. Tests and certifications found in a CBI Listing are LAMC approved. In addition, the Superintendent of Building shall accept duly authenticated reports from approved agencies in respect to the quality and manner of use of new materials or assemblies as provided for in the California Building Code (CBC) Section 1707.1.[21]

1.4 **Approved by Chicago**: The Municipal Code of Chicago (MCC) states in pertinent part that an Approved Agency is a Nationally Recognized Testing Laboratory (NRTL) acting within its recognized scope and/or a certification body accredited by the American National Standards Institute (ANSI) acting within its accredited scope. Construction materials and test procedures shall conform to the applicable standards listed in the MCC. Sufficient technical data shall be submitted to the building official to substantiate the proposed use of any product, material, service, design, assembly and/or method of construction not specifically provided for in the MCC. This technical data shall consist of research reports from approved sources (i.e., MCC defined Approved Agencies).

1.5 **Approved by New York City**: The NYC Building Code 2022 (NYCBC) states in pertinent part that an approved agency shall be deemed[22] an approved testing agency via ISO/IEC 17025 accreditation, an approved inspection agency via ISO/IEC 17020 accreditation, and an approved product evaluation agency via ISO/IEC 17065 accreditation. Accrediting agencies, other than federal agencies, must be members of an internationally recognized cooperation of laboratory and inspection accreditation bodies subject to a mutual recognition agreement[23] (i.e., ANAB, International Accreditation Forum (IAF), etc.).

[19] See Section 8 for the distilled building code definition of **Approved**

[20] Los Angeles Municipal Code, SEC. 98.0503. TESTING AGENCIES

[21] https://up.codes/viewer/california/ca-building-code-2022/chapter/17/special-inspections-and-tests#1707.1

[22] New York City, The Rules of the City of New York, § 101-07 Approved Agencies

[23] New York City, The Rules of the City of New York, § 101-07 Approved Agencies

Confidential Intellectual Property is protected by Defend Trade Secrets Act 2016,
© 2023 DrJ Engineering, LLC

1.6 **Approved by Florida**: Statewide approval of products, methods, or systems of construction shall be approved, without further evaluation, by 1) A certification mark or listing of an approved certification agency, 2) A test report from an approved testing laboratory, 3) A product evaluation report based upon testing or comparative or rational analysis, or a combination thereof, from an approved product evaluation entity; 4) A product evaluation report based upon testing or comparative or rational analysis, or a combination thereof, developed and signed and sealed by a professional engineer or architect, licensed in Florida. For local product approval, products or systems of construction shall demonstrate compliance with the structural wind load requirements of the Florida Building Code (FBC) through one of the following methods; 1) A certification mark, listing, or label from a commission-approved certification agency indicating that the product complies with the code; 2) A test report from a commission-approved testing laboratory indicating that the product tested complies with the code; 3) A product-evaluation report based upon testing, comparative or rational analysis, or a combination thereof, from a commission-approved product evaluation entity which indicates that the product evaluated complies with the code; 4) A product-evaluation report or certification based upon testing or comparative or rational analysis, or a combination thereof, developed and signed and sealed by a Florida professional engineer or Florida registered architect, which indicates that the product complies with the code; 5) A statewide product approval issued by the Florida Building Commission. The Florida Department of Business and Professional Regulation (DBPR) website provides a listing of companies certified as a Product Evaluation Agency (i.e., EVLMiami 13692), a Product Certification Agency (i.e., CER10642), and as a Florida Registered Engineer (i.e., ANE13741).

1.7 **Approved by Miami-Dade County (i.e., Notice of Acceptance [NOA])**: A Florida statewide approval is an NOA. An NOA is a Florida local product approval. By Florida law, Miami-Dade County shall accept the statewide and local Florida Product Approval as provided for in Florida legislation 553.842 and 553.8425.

1.8 **Approved by New Jersey**: Pursuant to Building Code 2018 of New Jersey in IBC Section 1707.1 General,[24] it states: "In the absence of approved rules or other approved standards, the building official shall accept duly authenticated reports from approved agencies in respect to the quality and manner of use of new materials or assemblies as provided for in the administrative provisions of the Uniform Construction Code (N.J.A.C. 5:23)".[25] Furthermore N.J.A.C 5:23-3.7 states: Municipal approvals of alternative materials, equipment, or methods of construction. **(a) Approvals**: Alternative materials, equipment, or methods of construction shall be approved by the appropriate subcode official provided the proposed design is satisfactory and that the materials, equipment, or methods of construction are suitable for the intended use and are at least the equivalent in quality, strength, effectiveness, fire resistance, durability and safety of those conforming with the requirements of the regulations. 1. A field evaluation label and report or letter issued by a nationally recognized testing laboratory verifying that the specific material, equipment, or method of construction meets the identified standards or has been tested and found to be suitable for the intended use, shall be accepted by the appropriate subcode official as meeting the requirements of (a) above. 2. Reports of engineering findings issued by nationally recognized evaluation service programs, such as, but not limited to, the Building Officials and Code Administrators (BOCA), the International Conference of Building Officials (ICBO), the Southern Building Code Congress International (SBCCI), the International Code Council (ICC), and the National Evaluation Service, Inc., shall be accepted by the appropriate subcode official as meeting the requirements of (a) above. The New Jersey Department of Community Affairs has confirmed that technical evaluation reports, from any accredited entity listed by ANAB, meets the requirements of item 2 given that the listed entities are no longer in existence and/or do not provide "reports of engineering findings".

[24] https://up.codes/viewer/new_jersey/ibc-2018/chapter/17/special-inspections-and-tests#1707.1

[25] https://www.nj.gov/dca/divisions/codes/codreg/ucc.html

Confidential Intellectual Property is protected by Defend Trade Secrets Act 2016,
© 2023 DrJ Engineering, LLC

1.9 **Approved by the Code of Federal Regulations Manufactured Home Construction and Safety Standards**: Pursuant to Title 24, Subtitle B, Chapter XX, Part 3282.14[26] and Part 3280,[27] the Department encourages innovation and the use of new technology in manufactured homes. The design and construction of a manufactured home shall conform with the provisions of Part 3282 and Part 3280 where key approval provisions in mandatory language follow: 1) "All construction methods shall be in conformance with accepted engineering practices"; 2) "The strength and rigidity of the component parts and/or the integrated structure shall be determined by engineering analysis or by suitable load tests to simulate the actual loads and conditions of application that occur."; and 3) "The design stresses of all materials shall conform to accepted engineering practice."

1.10 **Approval by US, Local, and State Jurisdictions in General**: In all other local and state jurisdictions, the adopted building code legislation states in pertinent part that:

1.10.1 For new materials that are not specifically provided for in this code, the design strengths and permissible stresses shall be established by tests.[28]

1.10.2 For innovative alternative products, materials, designs, services and/or methods of construction, in the absence of approved rules or other approved standards…the building official shall accept duly authenticated reports (i.e., listing and/or research report) from approved agencies with respect to the quality and manner of use of new materials or assemblies.[29] A building official approved agency is deemed to be approved via certification from an accreditation body that is listed by the International Accreditation Forum[30] or equivalent.

1.10.3 The design strengths and permissible stresses of any structural material…shall conform to the specifications and methods of design of accepted engineering practice performed by an approved source.[31] An approved source is defined as a PE subject to professional engineering laws, where a research and/or a technical evaluation report certified by a PE, shall be approved.

1.11 **Approval by International Jurisdictions**: The USMCA and GATT agreements provide for approval of innovative materials, products, designs, services, assemblies and/or methods of construction through the Technical Barriers to Trade agreements and the International Accreditation Forum (IAF) Multilateral Recognition Arrangement (MLA), where these agreements:

1.11.1 Permit participation of conformity assessment bodies located in the territories of other Members (defined as GATT Countries) under conditions no less favourable than those accorded to bodies located within their territory or the territory of any other country,

1.11.2 State that conformity assessment procedures (i.e., ISO/IEC 17020, 17025, 17065, etc.) are prepared, adopted, and applied so as to grant access for suppliers of like products originating in the territories of other Members under conditions no less favourable than those accorded to suppliers of like products of national origin or originating in any other country, in a comparable situation.

1.11.3 State that conformity assessment procedures are not prepared, adopted, or applied with a view to or with the effect of creating unnecessary obstacles to international trade. This means that conformity assessment procedures shall not be more strict or be applied more strictly than is necessary to give the importing Member adequate confidence that products conform to the applicable technical regulations or standards.

---

[26] https://www.ecfr.gov/current/title-24/subtitle-B/chapter-XX/part-3282/subpart-A/section-3282.14

[27] https://www.ecfr.gov/current/title-24/subtitle-B/chapter-XX/part-3280

[28] IBC 2021, Section 1706 Design Strengths of Materials, 1706.2 New Materials. Adopted law pursuant to IBC model code language 1706.2.

[29] IBC 2021, Section 1707 Alternative Test Procedure, 1707.1 General. Adopted law pursuant to IBC model code language 1707.1.

[30] Please see the ANAB directory for building official approved agencies.

[31] IBC 2021, Section 1706 Design Strengths of Materials, Section 1706.1 Conformance to Standards Adopted law pursuant to IBC model code language 1706.1.

Confidential Intellectual Property is protected by Defend Trade Secrets Act 2016,
© 2023 DrJ Engineering, LLC

1.11.4 **Approved**: The purpose of the IAF MLA is to ensure mutual recognition of accredited certification and validation/verification statements between signatories to the MLA, and subsequently acceptance of accredited certification and validation/verification statements in many markets based on one accreditation for the timely approval of innovative materials, products, designs, services, assemblies and/or methods of construction. Accreditations granted by IAF MLA signatories are recognised worldwide based on their equivalent accreditation programs, therefore reducing costs and adding value to businesses and consumers.

Confidential Intellectual Property is protected by Defend Trade Secrets Act 2016,
© 2023 DrJ Engineering, LLC

Issue Date: December 29, 2020

Subject to Renewal: July 1, 2027

FBC Supplement to TER 1503-03

REPORT HOLDER: OMG®, Inc. DBA FastenMaster®

1 Evaluation Subject

1.1 FastenMaster® FrameFAST™ Structural Wood Screw (FrameFAST™ Fasteners)

2 Purpose and Scope

2.1 Purpose

2.1.1 The purpose of this Technical Evaluation Report (TER) supplement is to show FastenMaster® FrameFAST™ Structural Wood Screw (FrameFAST™ Fasteners), recognized in TER 1503-03, have also been evaluated for compliance with the codes listed below as adopted by the Florida Building Commission.

2.2 *Applicable Code Editions*

2.2.1 *FBC-B—20, 23: Florida Building Code – Building (FL #21662)*

2.2.2 *FBC-R—20, 23: Florida Building Code – Residential (FL #21662)*

3 Conclusions

3.1 FastenMaster® FrameFAST™ Structural Wood Screw (FrameFAST™ Fasteners), described in Report Number 1503-03, complies with the FBC-B and FBC-R and are subject to the conditions of use described in this supplement.

3.2 Where there are variations between the IBC and IRC and the FBC-B and FBC-R applicable to this report, they are listed here:

3.2.1 FBC-B Section 104.4 and Section 110.4 are reserved.

3.2.2 FBC-R Section R104, Section R109 and Section R602.3.2 are reserved.

3.2.3 FBC-B Section 2308 is reserved and replaces IBC Section 2308.5.3.2.

3.2.4 FBC-R Section R301.2.1 replaces IRC Section R301.2.1.

3.2.5 FBC-R Section R301.2.2 replaces IRC Section R301.2.2.

3.2.6 FBC-R Section R602 replaces IRC Section R602.

4 Conditions of Use

4.1 FastenMaster® FrameFAST™ Structural Wood Screw (FrameFAST™ Fasteners), described in Report Number 1503-03, must comply with all of the following conditions:

4.1.1 All applicable sections in Report Number 1503-03.

4.1.2 The design, installation, and inspections are in accordance with additional requirements of FBC-B Chapter 16 and Chapter 17, as applicable.

Confidential Intellectual Property is protected by Defend Trade Secrets Act 2016,
© 2023 DrJ Engineering, LLC