EVALUATION REPORT OF
VARCO PRUDEN BUILDINGS
'SLR II ROOF PANEL'

FLORIDA BUILDING CODE 7TH EDITION (2020)
FLORIDA PRODUCT APPROVAL
FL 14004.1-R5
STRUCTURAL COMPONENTS
ROOF DECK

Prepared For:
Varco Pruden Buildings
A Division of BlueScope Buildings North America, Inc.
3200 Players Circle
Memphis, TN 38125
Telephone: (901) 748-8000

Prepared By:
Bala Sockalingam, Ph.D., P.E.
Florida Professional Engineer #62240
1216 N Lansing Ave., Suite C
Tulsa, OK 74106
Telephone: (918) 492-5992
FAX: (866) 366-1543

This report consists of
Evaluation Report (3 Pages including cover)
Design Procedure (6 Pages)
Installation Details (2 Pages)

Report No. C2386-5
Date: 9.25.2020

BALA SOCKALINGAM
LICENSE
No 62240
STATE OF
FLORIDA
PROFESSIONAL ENGINEER

9.25.2020

Manufacturer:	Varco Pruden Buildings
Product Name:	SLR II
Panel Description:	Standing seam panel with 16" wide coverage and 2" high ribs
Materials:	Min 24 ga., 50 ksi galvanized coated steel (ASTM A653) or galvalume coated steel (ASTM A792). Corrosion resistant as per FBC 2020 Section 1507.4.3.
Support Description:	Min. 16 ga., 55 ksi steel section
Slope:	1/4:12 or greater in accordance with FBC 2020 Section 1507.4.2
Design Uplift Pressure:	The allowable uplift loads shown on Page 6 of the Design Procedure were determined from ASTM E1592 testing and are applicable for the panel and panel to clip connection. Clip fastener, purlin, frames and support connections must be designed to resist all loads. The factors of safety were determined in accordance with FBC 2020 Section 1504.9, ASTM E1592 test standard and the procedures of Section I6.3.1, K2.1.1 and K2.1.2 of the AISI S100-16.
Panel Attachment:	Clip Type: SLR II low sliding clip – 2.5" high. Clip tab: 22 ga. galvanized, 4.3" wide, Clip base: 16 ga. galvanized, 1.88" wide. Fastened to supports with min (2) ¼"-14 x 1-1/2" long Teks/3 SDS per clip. Clips and fasteners are corrosion resistant as per FBC 2020 Section 1506.7 and 1507.4.4, respectively.
Test Standards:	Roof assembly tested in accordance with ASTM E1592-05(2012) 'Test Method for Structural Performance of Sheet Metal Roof and Siding Systems by Uniform Static Air Pressure Difference' and FM 4471 Section 4.4 'Foot Traffic Resistance'.
Code Compliance:	The product described herein has demonstrated compliance with FBC 2020 Section 1507.4.
Product Limitations:	Design wind loads shall be determined for each project in accordance with FBC 2020 Section 1609 or ASCE 7-16 using allowable stress design. The maximum support spacing listed herein shall not be exceeded. The design pressure for reduced clip spacing may be computed using rational analysis prepared by a Florida Professional Engineer or based on Varco load span table. This evaluation report is not applicable in High Velocity Hurricane Zone. Fire classification is not within scope of this Evaluation Report. Refer to FBC 2020 Section 1505 and current approved roofing materials directory or ASTM

E108/UL790 report from an accredited laboratory for fire ratings of this product.

Supporting Documents: ASTM E1592 Test Reports
ENCON Technology Inc.
C2242-1, Reporting Date 6/11/18
C2242-2, Reporting Date 6/11/18

FM 4471 Test Report
FM Approvals
1D6A9.AM, Reporting Date 12/3/97
(Varco Pruden Buildings is authorized to use Butler Manufacturing Company's Test Reports)

SLR II ROOF PANEL

A. PANEL MATERIAL (MS 05-01)

Panels are rolled using ASTM A 653 or A 792 material, Grade 50. For complete material specifications and material weights, refer to Material Specifications Documents MS-05-01.

B. PANEL GEOMETRY (DP 21.4)

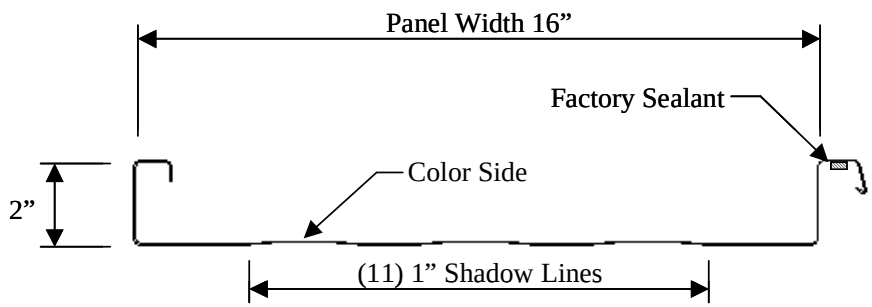

C. PANEL PROPERTIES (DP 21.4)

				Effective Section Properties (per Ft. width of panel)			
Panel Section Properties (per Ft. width of panel)				Outside of Panel In Compression		Inside of Panel In Compression	
Ref. Gauge	Design Base [1] Metal Thickness	Panel Weight [2]	I_x FULL	I_{xd} (+) DEFLECTION	S_{xe} (+) STRENGTH	I_{xd} (-) DEFLECTION	S_{xe} (-) STRENGTH
	(in.)	(psf)	(in.^{4})	(in.^{4})	(in.^{4})	(in.^{4})	(in.^{3})
24	0.023	1.38	0.1868	0.174	0.107	0.074	0.066
22	0.029	1.73	0.2325	0.228	0.142	0.101	0.091

Notes:

1. Panel properties determined per AISI Specification Section B.
2. Design base metal thickness is exclusive of coatings and painted finishes.
3. Weights are determined based on AZ55 Galvalume coated panel thickness with a material blank 22.69”.

D. PANEL DESIGN (DP 10.1)

Panels are designed in accordance with the "North American Specification for the Design of Cold-Formed Steel Structural Members", AISI Standard S100. Panel design limit states and other design considerations have been summarized below.

Limit State / Design Consideration	References
Panel: ● Section Properties ● Bending Strength ● Web Crippling Strength** ● Shear Strength ● Bending and Shear ● Bending and Web Crippling	 Section B5. Section F1, F3.1, I6.2.1, I6.2.1* Section G5 Section G Section H2 (Not a limit state for panel design)
Screw Connections: ● Tension, Pullout & Pullover Strength	Design Procedures: DP 3.7
Deflection: ● Limits	Design Procedures: DP 6.2

* In accordance with AISI Section I6.1.2, for standing seam roof panel systems under uplift loadings the nominal strength (resistance) shall be determined by testing per AISI test procedure S906 (ASTM E1592). Panel strength (resistance) under gravity loading may be determined by AISI Sections F3 and F4 as referenced above.
** Not required for trapezoidal profile standing seam roof panels

D1. Panel Flexural Strength (DP 21.4) kip-in. / ft. width of panel

Ref. Gauge	Outside of Panel in Compression, S_{xe} (+)				Inside of Panel in Compression, S_{xe} (-)			
	Nominal Strength M_n	Allowable Strength ASD	Design Strength LRFD	Design Resistance LSD	Nominal Strength M_n	Allowable Strength ASD	Design Strength LRFD	Design Resistance LSD
24	5.35	2.68	4.28	4.02	3.28	1.64	2.62	2.46
22	7.11	3.56	5.69	5.33	4.57	2.29	3.66	3.43

Notes:

1. Tabulated values are for Allowable and Design Bending Strengths (Resistances) where:
   - Allowable Strength = M_n / Ω_b (ASD), kip-in.
   - Design Strength = $\phi_b M_n$ (LRFD & LSD), kip-in.
   - Ω_b = 2.00 (ASD); ϕ_b = 0.80 (LRFD); ϕ_b = 0.75 (LSD-Canada)
2. Nominal Bending Strength: $M_n = S_{xe}F_y$, kip-in.
3. Load reductions or strength (resistance) increases for wind have not been included.

D2. Uplift Strength (DP 21.4)

Gauge	Clip Spacing	Nominal Strength W_n (psf)	Allowable Strength (ASD)	Design Strength (LRFD)	Design Resistance(LSD)
24	5'-0" $\geq S_c \geq$ 2'-0"	$W_n = -38.7\ S_c + 277.3$	$\Omega = 1.702$	$\phi = 0.94$	$\phi = 0.783$
22	5'-0" $\geq S_c \geq$ 2'-0"	$W_n = -52.0\ S_c + 384.0$			

Notes:

1. Tabulated values are for Allowable and Design Shear Strengths (Resistances) where:
   - Allowable Strength = W_n / Ω_v (ASD), psf
   - Design Strength (Resistance) = $\phi\ W_n$ (LRFD & LSD), psf
   - S_c = clip spacing, ft.
2. Nominal Strength (Resistance) determined in accordance AISI Test Procedure S906 "Standard Procedures for Panel and Anchor Structural Tests." Reference: Capacities based on ASTM E1592 testing performed by ENCON Technologies in May 2018. Refer to reports C2242-1 & C2242-2 for SLRII.
3. Load reductions or strength (resistance) increases for wind have not been included.

D3. Panel Shear Strength (DP 21.4) kips / ft. width of panel

Ref. Gauge	Nominal Strength V_n	Allowable Strength ASD	Design Strength LRFD	Design Resistance LSD
24	1.34	0.84	1.27	1.07
22	2.13	1.33	2.02	1.70

Notes:

1. Tabulated values are for Allowable and Design Shear Strengths (Resistances) where:
   - Allowable Strength = V_n / Ω_v (ASD), kips per ft. width of panel
   - Design Strength (Resistance) = $\phi_v V_n$ (LRFD & LSD), kips per ft. width of panel
   - Ω_v = 1.6 (ASD); ϕ_v = 0.95 (LRFD); ϕ_v = 0.80 (LSD-Canada)
2. Nominal Shear Strength: V_n per AISI Section G, kips per ft. width of panel.
3. Load reductions or strength (resistance) increases for wind have not been included.

D4. Panel Web Crippling Strength (DP 21.4) kips / ft. width of panel

Panel Gauge	End – One Flange Loading [5]				Interior – One Flange Loading			
	Nominal Strength P_n	Allowable Strength ASD	Design Strength LRFD	Design Resistance LSD	Nominal Strength P_n	Allowable Strength ASD	Design Strength LRFD	Design Resistance LSD
24	0.306	0.125	0.184	0.153	0.652	0.372	0.554	0.489
22	0.504	0.206	0.303	0.252	1.000	0.571	0.850	0.750

Notes:

1. Tabulated values are for Allowable and Design Web Crippling Strengths (Resistances) where:
   - Allowable Strength = P_n / Ω_w (ASD), lbs per ft. width of panel
   - Design Strength (Resistance) = $\phi_w P_n$ (LRFD & LSD), lbs per ft. width of panel
   - End Loading: Ω_w = 2.45 (ASD); ϕ_w = 0.60 (LRFD); ϕ_w = 0.50 (LSD-Canada)
   - Interior Loading: Ω_w = 1.75 (ASD); ϕ_w = 0.85 (LRFD); ϕ_w = 0.75 (LSD-Canada)
2. Nominal Web Crippling Strength: P_n derived per AISI Section G5, Table G5-5 for Unfastened, One-Flange Loading or Reaction.
3. Bearing length, N = 2.5" assumed for all calculations.
4. Load reductions or strength (resistance) increases for wind have not been included.
5. "End" loading conditions are applicable when the distance from the edge of bearing to the end of the panel is ≤ 1.5 h or 3". This is not the case for standard details and panel design at end supports assume "Interior" loading conditions.

D5. Panel Connections

Standard panel-to-secondary support connections are made with (2) 1/4 -14 self-drilling structural fasteners per clip.

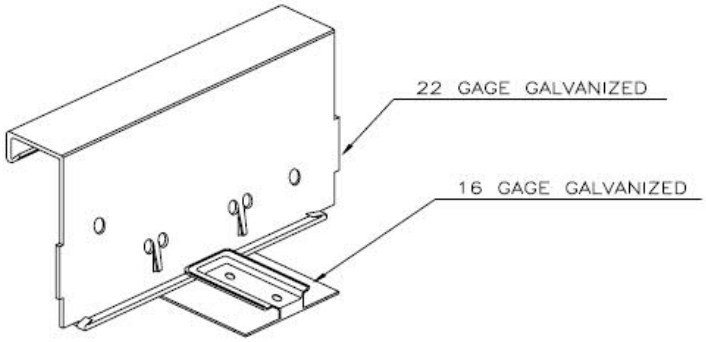

a) Pullout Strength (DP 3.7.1.VP)

Screw Pull-Out Strength[1] from Z/C Secondary, (lbs. / Screw)

Secondary [2] Properties		¼ - 14 Screws (d = 0.250")			
F_{u2} (ksi)	Thick. t_2 (in.)	Nominal Strength P_{not}	Allow. Strength (ASD)	Design Strength (LRFD)	Design Resist. (LSD)
70	0.060	893	298	446	357
	0.068	1012	337	506	405
	0.073	1086	362	543	434
	0.079	1175	392	588	470
	0.088	1309	436	655	524
	0.098	1458	486	729	583
	0.113	1681	560	840	672

Notes:
1. AISI Section J4.4.1, Ω = 3.00 (ASD), ϕ = 0.50 (LRFD), ϕ = 0.40 (LSD)
2. The above values may be factored by the ratio of Fu for other materials.

D6. Panel Deflections (DP 21.4)

For pressure (+) loading producing compression on the panel outside panel deflections are obtained by using I_{xe}(+). For suction (-) loading producing compression on the panel inside, panel deflections are obtained by using I_{xe}(-). Standard BlueScope deflection requirements for panels are listed in Design Procedure DP 6.2

E. SECONDARY DESIGN

SLR II roof panels are classified in DP 4.1 as Type 2 panels "Standing Seam roofs with tested R-values" requiring purlin design per AISI I6.2.2.

F. PANEL LOAD TABLES (VP PANEL LOAD TABLES REV 21)

		Allowable Uniform Load (psf)													
		Span = 2.0'		Span = 2.5'		Span = 3.0'		Span = 3.5'		Span = 4.0'		Span = 4.5'		Span = 5.0'	
Gage	Fy	P	S	P	S	P	S	P	S	P	S	P	S	P	S
24 Ga.	50	156	128	125	106	104	95	89	83	78	72	66	61	54	49
22 Ga.	50	257	180	206	149	172	134	147	119	116	103	92	88	75	73

Notes:

1. P = Pressure on outside of panel, S = suction on outside of face.
2. Tabulated values are Allowable Strength Design (ASD) format in accordance with the 2016 AISI Specification considering bending, shear, web crippling, combined bending and shear and fastener pullover from panel.
3. Panel allowable loads are limited by L/60 deflection.
4. Allowable loads for suction are based on ASTM E1592 tests. See Section D2
5. All values shown are for 3 or more spans.
6. For fastener pullout strength from secondary refer to Section D5.

Document and Revision History

REV. #	DATE	NAME	DESCRIPTION
0	09/22/2017	R.Benton	Original document (Reproduced to match previous submittals using new documents and formats
1	09/2020	R. Benton	Renumbered document. Updating for 2020 FBC release. . corrected load table values updated AISI references.