**EVALUATION REPORT OF**
**VARCO PRUDEN BUILDINGS**
**'PANEL RIB ROOF PANEL'**

**FLORIDA BUILDING CODE 9TH EDITION (2026)**
**FLORIDA PRODUCT APPROVAL**
**FL 12763.1-R7**
**STRUCTURAL COMPONENTS**
**ROOF DECK**

**Prepared For:**
**Varco Pruden Buildings**
**A Division of BlueScope Buildings North America, Inc.**
**3200 Players Circle**
**Memphis, TN 38125**
**Telephone: (901) 748-8000**

**Prepared By:**
**Bala Sockalingam, Ph.D., P.E.**
**Florida Professional Engineer #62240**
**1216 N Lansing Ave., Suite C**
**Tulsa, OK 74106**
**Telephone: (918) 492-5992**

**This report consists of**
**Evaluation Report (3 Pages including cover)**
**UL Constructions (4 Pages)**
**Design Procedure (5 Pages)**
**Installation Details (4 Pages)**

**Report No. C3051-1**
**Date: 9.26.2026**

BALA SOCKALINGAM
LICENSE
No. 62240
STATE OF
FLORIDA
PROFESSIONAL ENGINEER

This item has been digitally signed and sealed by Bala Sockalingam, PE, on the date indicated.

Printed copies of this document are not considered signed and sealed and this signature must be verified on any electronic copies.

2026.09.26
13:12:42
-05'00'

| | |
|---|---|
| Manufacturer: | Varco Pruden Buildings |
| Product Name: | Panel Rib |
| Panel Description: | 36" wide coverage with (4) 1-3/16" high ribs |
| Materials: | Min. 26 ga., 80 ksi steel or min. 24 ga., 50 ksi steel. Galvanized coated steel (ASTM A653) or Galvalume coated steel (ASTM A792). Corrosion resistant as per FBC 2026 Section 1507.4.3. |
| Support Description: | Min. 16 ga., 55 ksi steel section. |
| Slope: | 1/2:12 or greater in accordance with FBC 2026 Section 1507.4.2. Requires applied lap sealant for roof slopes less than 3:12. |
| Design Uplift Pressure: | The allowable uniform loads shown on Page 5 of the Design Procedure were determined in accordance with FBC 2026 Section 1504.3.2 and 2210.1 and AISI S100-16(2020) w/S2-20. Panel fastener, purlin, frames and support connections must be designed to resist all loads. |
| Panel Attachment: | #12-14 x 1-1/4" long self-drilling screws with washer. Fasteners are corrosion resistant as per FBC 2026 Section 1507.4.4. For installation in areas within 3000 ft. of a saltwater coastline, fasteners are corrosion resistant as per FBC 2026 Section 1711. |
| At panel ends | 4" o.c. across panel width |
| At intermediate | 12" o.c. across panel width |
| Sidelap Attachment: | ¼"-14 x 7/8" long self-drilling screws with washer at max. 30" o.c. Fasteners are corrosion resistant as per FBC 2026 Section 1507.4.4. For installation in areas within 3000 ft. of a saltwater coastline, fasteners are corrosion resistant as per FBC 2026 Section 1711. |
| Test Standards: | Roof assembly tested in accordance with UL580-06 'Uplift Resistance of Roof Assemblies' and FM 4470 (2016) Section 4.6 'Resistance to Foot Traffic'. |
| Test Equivalency: | The test procedures in FM 4470 (2016) comply with test procedures prescribed in FM 4470 (2022) Section 4.6 'Resistance to Foot Traffic'. |
| Code Compliance: | The product described herein has demonstrated compliance with FBC 2026 Section 1507.4. |
| Product Limitations: | Design wind loads shall be determined for each project in accordance with FBC 2026 Section 1609 or ASCE 7-22 using allowable stress design. The maximum support spacing listed herein shall not be exceeded. The design pressure for reduced support spacing may be |

computed using rational analysis prepared by a Florida Professional Engineer or based on Varco load span table. This evaluation report is not applicable in High Velocity Hurricane Zone. Fire classification is not within the scope of this Evaluation Report. Refer to FBC 2026 Section 1505 and current approved roofing materials directory or ASTM E108/UL790 report from an accredited laboratory for fire ratings of this product.

Supporting Documents: UL Roof Deck Construction Numbers 60 & 64

FM 4470 Test Report
ENCON Technology Inc.
C2384-1, Reporting Date 9/21/2020

# TGKX.60 - Roof Deck Constructions

Design/System/Construction/Assembly Usage Disclaimer

- Authorities Having Jurisdiction should be consulted in all cases as to the particular requirements covering the installation and use of UL Certified products, equipment, system, devices, and materials.
- Authorities Having Jurisdiction should be consulted before construction.
- Fire resistance assemblies and products are developed by the design submitter and have been investigated by UL for compliance with applicable requirements. The published information cannot always address every construction nuance encountered in the field.
- When field issues arise, it is recommended the first contact for assistance be the technical service staff provided by the product manufacturer noted for the design. Users of fire resistance assemblies are advised to consult the general Guide Information for each product category and each group of assemblies. The Guide Information includes specifics concerning alternate materials and alternate methods of construction.
- Only products which bear UL's Mark are considered Certified.

## Roof Deck Constructions

See General Information for Roof Deck Constructions

### Construction No. 60

April 05, 2013

### Uplift — Class 60

### Fire Not Investigated

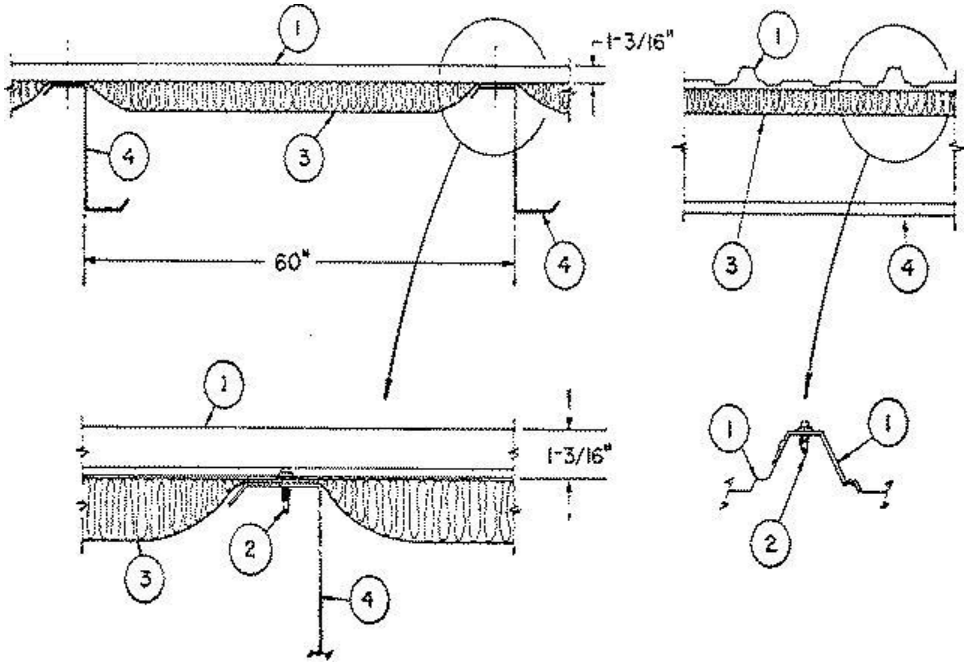


1. **Metal Roof Deck Panels* —** No. 26 MSG min gauge coated steel. Panels continuous over two or more spans. End laps to occur over purlins with panels overlapped 4 in. with lap beginning 1 in. from purlin web and extending across purlin flange. A bead of sealant may be used at panel end and side laps.
**VARCO PRUDEN BUILDINGS, DIV OF BLUESCOPE BUILDINGS NORTH AMERICA INC** (View Classification) — "Panel Rib" .

2. **Panel Fasteners —** For panel to purlin connections to be No. 12-14, self-drilling, self-tapping, hex-head, coated steel screws with a 5/8 in. OD steel washer and a bonded neoprene sealing washer. Length to be 1 in. for 3 in. max thickness insulation and 1-1/4 in. for thickness greater than 3 in.
Spacing to be 12 in. OC with fasteners located 2 in. from the center line of each major rib. Spacing at end laps to be in a 4-8-4-8 in. pattern with fasteners located 2 in. from the center line on both sides of each major rib.

Fasteners of panel to panel connections to be No. 1/4-14 x 3/4 in. self-drilling, self-tapping, coated steel screws with a 5/8 in. OD steel washer and a bonded neoprene sealing washer. Spacing to be one located at purlin and one between purlins.

3. **Insulation (Optional) —** Any compressible blanket insulation, 6 in. max thickness before compression.

4. **Purlins —** No. 16 MSG min gauge steel (50,000 psi min yield strength).
Refer to General Information, Roof Deck Constructions (Roofing Materials and Systems Directory) for Items not evaluated.

# TGKX.64 - Roof Deck Constructions

Design/System/Construction/Assembly Usage Disclaimer

- Authorities Having Jurisdiction should be consulted in all cases as to the particular requirements covering the installation and use of UL Certified products, equipment, system, devices, and materials.
- Authorities Having Jurisdiction should be consulted before construction.
- Fire resistance assemblies and products are developed by the design submitter and have been investigated by UL for compliance with applicable requirements. The published information cannot always address every construction nuance encountered in the field.
- When field issues arise, it is recommended the first contact for assistance be the technical service staff provided by the product manufacturer noted for the design. Users of fire resistance assemblies are advised to consult the general Guide Information for each product category and each group of assemblies. The Guide Information includes specifics concerning alternate materials and alternate methods of construction.
- Only products which bear UL's Mark are considered Certified.

## Roof Deck Constructions

See General Information for Roof Deck Constructions

### Construction No. 64

April 05, 2013

### Uplift — Class 90

### Fire Not Investigated

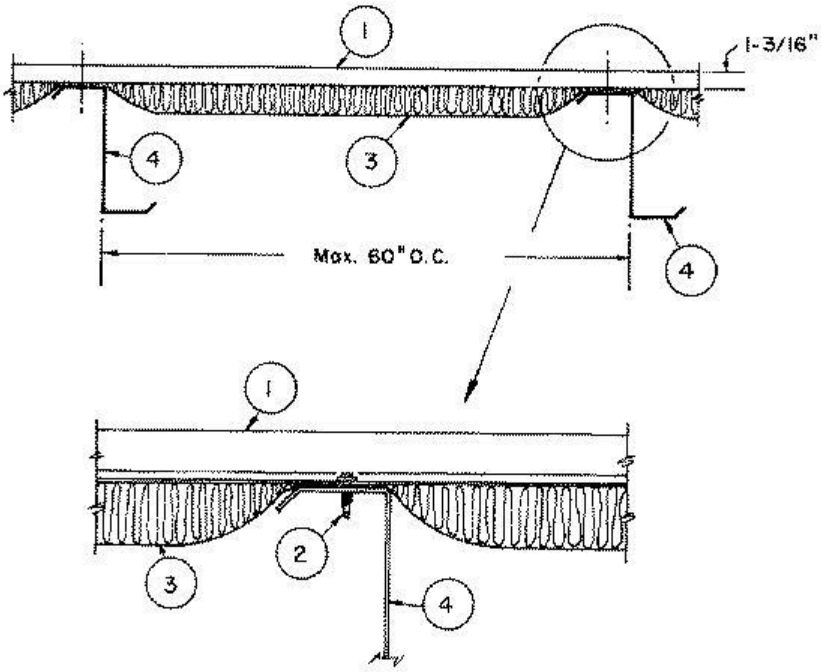

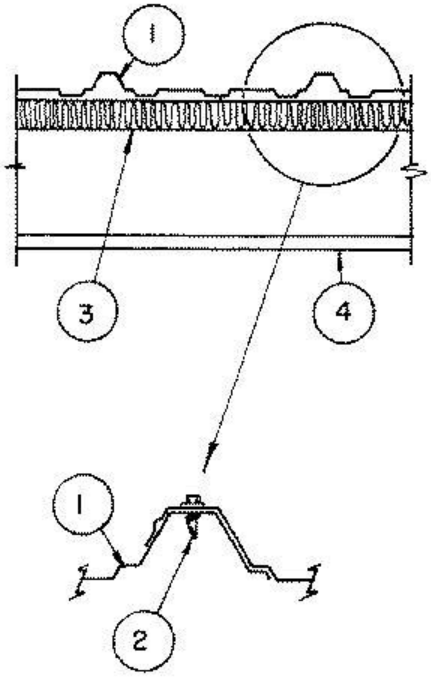


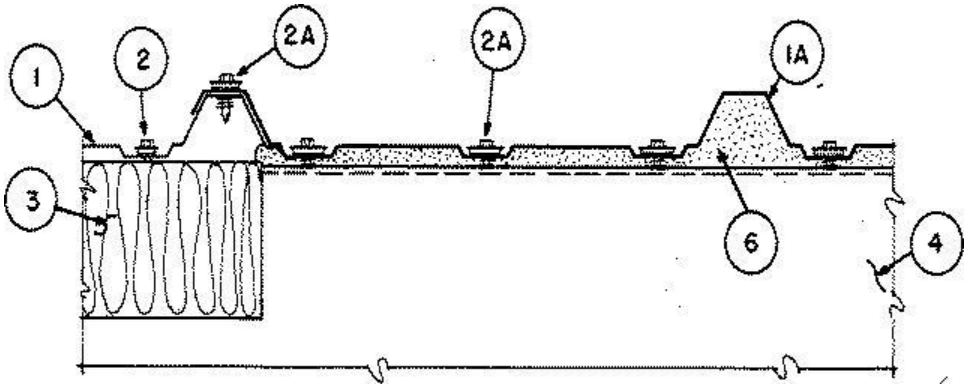


1. **Metal Roof Deck Panels* —** No. 26 MSG min gauge coated steel. Panels continuous over two or more spans. End laps to occur over purlins with panels overlapped 4 in. with lap beginning 1 in. from purlin web and extending across purlin flange. A bead of sealant may be used at panel end and side laps.
**VARCO PRUDEN BUILDINGS, DIV OF BLUESCOPE BUILDINGS NORTH AMERICA INC** (View Classification) — "Panel Rib".

1A. **Building Units —** * Translucent, glass fiber reinforced plastic panels with or without attached translucent condensation pans. Units formed to the same configuration as the metal (Panel Rib) panels. Panels continuous over two spans, total length to be 10 ft, 4 in.
**VARCO PRUDEN BUILDINGS, DIV OF BLUESCOPE BUILDINGS NORTH AMERICA INC** (View Classification) — "Panel Rib Tuf-Lite".

2. **Panel Fasteners —** For panel to purlin connections to be No. 12-14 self-drilling, self-tapping, hex-head, plated steel screws with a 5/8 in. OD steel washer and a bonded neoprene sealing washer.
Length to be 1 in. when 3 in. max thickness is used and 1-1/4 in. when insulation thicker than 3 in. is used.

Spacing to be in a 4-8-4-8 in. pattern located 2 in. from the center line on both sides of each major rib. Spacing at end laps to be 4 in. OC with fasteners located 2 in. from the center line on both sides of each major rib.

Fasteners for panel to panel connections to be No. 14-14 by 3/4 in. self-tapping, hex-head, plated steel screws with a 5/8 in. OD steel washer and a bonded neoprene sealing washer.

Spacing to be 30 in. OC.

2A. **Translucent Panel Fasteners —** For plastic panel to purlin connection to be No. 12-14 by 1 in. self-drilling, self-tapping, hex-head, plated steel screws with a separate 3/8 in. OD steel washer and a bonded neoprene sealing washer. Spacing to be 4 in. on center located 2 in. from the center line on both sides of each major rib and centered between major ribs. Downslope endlap fasteners and spacing to be same. Upslope endlap fasteners and spacing to be same as shown for metal panel endlaps in Item 2 above. Length to be same as for metal panel to purlin connections. Fasteners for panel to panel connections to be 1/4-14 by 3/4 in. self-drilling, self-tapping, hex-head, plated steel screws with a separate 7/8 in. OD steel washer and bonded neoprene sealing washer. Spacing to be 10 in. OC with a fastener located at the endlaps.

3. **Insulation (Optional) —** Any compressible blanket insulation, 6 in. max thickness before compression.

4. **Purlin —** No. 16 MSG min gauge steel (50,000 psi min yield strength).

5. **Lateral Bracing —** (Not shown) — As required.

6. **Isolation Spacer —** Located between translucent panel and uninsulated purlin with panel to purlin fasteners passing through spacer.

Refer to General Information, Roof Deck Construction (Roofing Materials and Systems Directory) for Items not evaluated.

## * Indicates such products shall bear the UL or cUL Certification Mark for jurisdictions employing the UL or cUL Certification (such as Canada), respectively.

Last Updated on 2013-04-05

---

The appearance of a company's name or product in this database does not in itself assure that products so identified have been manufactured under UL's Follow-Up Service. Only those products bearing the UL Mark should be considered to be Certified and covered under UL's Follow-Up Service. Always look for the Mark on the product.

UL permits the reproduction of the material contained in the Online Certification Directory subject to the following conditions: 1. The Guide Information, Assemblies, Constructions, Designs, Systems, and/or Certifications (files) must be presented in their entirety and in a non-misleading manner, without any manipulation of the data (or drawings). 2. The statement "Reprinted from the Online Certifications Directory with permission from UL" must appear adjacent to the extracted material. In addition, the reprinted material must include a copyright notice in the following format: "© 2020 UL LLC"

# PANEL RIB

## A. PANEL MATERIAL (MS 05-01)

Panels are rolled using ASTM A 653 or A 792 material, for Grade see Table in Section C below. For complete material specifications and material weights refer to Material Specifications Document MS-05-01.

## B. PANEL GEOMETRY (DP 25.1)

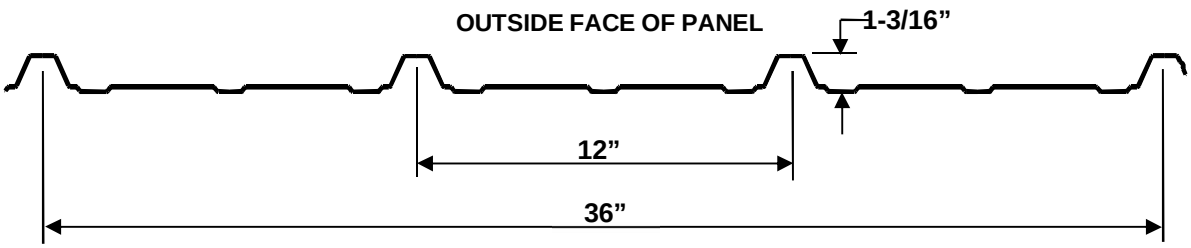


## C. PANEL PROPERTIES (DP 25.1)

| | | | | | | Effective Section Properties (per foot width of panel) | | | |
|---|---|---|---|---|---|---|---|---|---|
| Panel Section Properties (per foot width of panel) | | | | | | Outside of Panel In Compression | | Inside of Panel In Compression | |
| Gauge & Application | Base [3] Metal Thick. | Panel [2] Strength | | Panel Weight [4] | $I_x$ FULL | $I_{xe}$ (+) DEFL. | $S_{xe}$ (+) STRENGTH | $I_{xe}$ (-) DEFL. | $S_{xe}$ (-) STRENGTH |
| | (in.) | Fy (ksi) | Fu (ksi) | (psf) | (in.$^4$) | (in.$^4$) | (in.$^3$) | (in.$^4$) | (in.$^3$) |
| 26 roof/wall | 0.018 | 50[2] | 65 | 0.91 | 0.0390 | 0.034 | 0.037 | 0.034 | 0.044 |
| 24 roof/wall | 0.023 | 50 | 65 | 1.16 | 0.0500 | 0.047 | 0.052 | 0.045 | 0.056 |
| 22 roof/wall | 0.029 | 50 | 65 | 1.45 | 0.0633 | 0.060 | 0.069 | 0.057 | 0.070 |

**Notes:**

1. Panel properties are determined in accordance with AISI Specification Section B.
2. 26 Ga., bare-un painted roof panels are manufactured from ASTM A792, Grade 80 ($F_y$ = 80 ksi) material for walkability. Design is based on $F_y$ = 50 ksi.
3. The design base metal thickness is exclusive of Galvanized / Galvalume coatings and paint finishes.
4. Weights for 26, 24 and 22 ga. roof and wall panels are based on AZ55 Galvalume thickness with a material blank width of 42¾ inches. (ref. MS-05-01)

## D. PANEL DESIGN (DP 10.1)

Panels are designed in accordance with the "North American Specification for the Design of Cold-Formed Steel Structural Members", AISI Standard S100. Panel design limit states and other design considerations have been summarized below.

| Limit State / Design Consideration | References |
|---|---|
| **Panel:**<br>● Section Properties<br>● Bending Strength<br>● Web Crippling Strength**<br>● Shear Strength<br>● Bending and Shear<br>● Bending and Web Crippling | <br>Section B5.<br>Section F1, F3.1, I6.2.1, I6.2.1*<br>Section G5<br>Section G<br>Section H2<br>(Not a limit state for panel design) |
| **Screw Connections:**<br>● Tension, Pullout & Pullover Strength | Design Procedures: DP 3.7 |
| **Deflection:**<br>● Limits | Design Procedures: DP 6.2 |

* In accordance with AISI Section D6.1.2, for standing seam roof panel systems under uplift loadings the nominal strength (resistance) shall be determined by testing per AISI test procedure S906 (ASTM E1592). Panel strength (resistance) under gravity loading may be determined by AISI Sections F3 and F4 as referenced above.
** Not required for trapezoidal profile standing seam roof panels

### D1. Panel Flexural Strength (DP 25.1) kip-in. / ft. width of panel

| Gauge & Application | Outside of Panel in Compression, $S_{xe}$ (+) | | | | Inside of Panel in Compression, $S_{xe}$ (-) | | | |
|---|---|---|---|---|---|---|---|---|
| | Nominal[2] Strength $M_n$ | Allowable Strength | Design Strength | Design Resistance | Nominal[2] Strength $M_n$ | Allowable Strength | Design Strength | Design Resistance |
| | | ASD | LRFD | LSD | | ASD | LRFD | LSD |
| 26 | 1.86 | 1.11 | 1.67 | 1.67 | 2.18 | 1.31 | 1.96 | 1.96 |
| 24 | 2.62 | 1.57 | 2.36 | 2.36 | 2.79 | 1.67 | 2.51 | 2.51 |
| 22 | 3.43 | 2.06 | 3.09 | 3.09 | 3.49 | 2.09 | 3.14 | 3.14 |

**Notes:**

1. Tabulated values are for Allowable and Design Bending Strengths (Resistances) where:
   - Allowable Strength = $M_n / \Omega_b$ (ASD), kip-in.
   - Design Strength = $\phi_b M_n$ (LRFD & LSD), kip-in.
   - $\Omega_b$ = 1.67 (ASD); $\phi_b$ = 0.90 (LRFD); $\phi_b$ = 0.90 (LSD-Canada)
2. $M_n$ = Nominal Bending Strength
3. Load reductions or strength (resistance) increases for wind have not been included

## D2. Panel Shear Strength (DP 25.1) kips / ft. width of panel

| Gauge & Application | Nominal Strength[2] $V_n$ | Allowable Strength | Design Strength | Design Resistance |
|---|---|---|---|---|
| | | ASD | LRFD | LSD |
| 26 | 1.02 | 0.64 | 0.97 | 0.82 |
| 24 | 1.30 | 0.82 | 1.24 | 1.04 |
| 22 | 1.64 | 1.02 | 1.56 | 1.31 |

**Notes:**

1. Tabulated values are for Allowable and Design Shear Strengths (Resistances) where:
   - Allowable Strength = $V_n / \Omega_v$ (ASD), kips per ft. width of panel
   - Design Strength (Resistance) = $\phi_v V_n$ (LRFD & LSD), kips per ft. width of panel
   - $\Omega_v$ = 1.6 (ASD); $\phi_v$ = 0.95 (LRFD); $\phi_v$ = 0.80 (LSD-Canada)
2. $V_n$ = Nominal Shear Strength
3. Load reductions or strength (resistance) increases for wind have not been included.

## D3. Panel Web Crippling Strength (DP 25.1) kips / ft. width of panel

| Gauge & Application | End – One Flange Loading | | | | Interior – One Flange Loading | | | |
|---|---|---|---|---|---|---|---|---|
| | Nominal[2] Strength $P_n$ | Allowable Strength ASD | Design Strength LRFD | Design Resistance LSD | Nominal[2] Strength $P_n$ | Allowable Strength ASD | Design Strength LRFD | Design Resistance LSD |
| 26 | 0.379 | 0.223 | 0.341 | 0.303 | 0.563 | 0.322 | 0.478 | 0.422 |
| 24 | 0.588 | 0.346 | 0.529 | 0.471 | 0.886 | 0.506 | 0.753 | 0.665 |
| 22 | 0.889 | 0.523 | 0.800 | 0.711 | 1.358 | 0.776 | 1.154 | 1.018 |

**Notes:**

1. Tabulated values are for Allowable and Design Web Crippling Strengths (Resistances) where:
   - Allowable Strength = $Pn / \Omega w$ (ASD), kips per ft. width of panel
   - Design Strength (Resistance) = $\phi w Pn$ (LRFD & LSD), kips per ft. width of panel
   - End Loading: $\Omega w$ = 1.7 (ASD); $\phi w$ = 0.90 (LRFD); $\phi w$ = 0.80 (LSD-Canada)
   - Interior Loading: $\Omega w$ = 1.75 (ASD); $\phi w$ = 0.85 (LRFD); $\phi w$ = 0.75 (LSD-Canada)
2. Pn = Nominal Web Crippling Strength
3. Load reductions or strength (resistance) increases for wind have not been included.

## D4. Panel Connections

Standard panel-to-secondary support connections are made with #12-14 self-drilling structural roof or wall fasteners located a minimum of one foot on center at each rib location.

## a) Pullover Strength (DP 3.7.1.VP)

Screw Pull-Over Strength[1] from Panel or Deck, (lbs / Screw)

| Screw Type [4] | Pullover From [3]: | Nominal Strength $P_{nov}$, (Lbs.) | Allowable Strength $P_{nov}/\Omega$ (ASD) | Design Strength $\Phi P_{nov}$ (LRFD) | Design Resistance $\Phi P_{nov}$ (LSD) |
|---|---|---|---|---|---|
| Wall Structural, Stainless #12 -14 ($d_w$ = 0.578)[2]<br>Wall Stitch, Stainless ¼ - 14 ($d_w$ = 0.578")[2] | 26 Ga. Panel ($t_1$ = 0.018") | 810 | **270** | **405** | **324** |
| | 24 Ga. Panel ($t_1$ = 0.023") | 1035 | **345** | **518** | **414** |
| | 22 Ga. Panel ($t_1$ = 0.029") | 1305 | **435** | **653** | **522** |

Notes:
1. AISI Section J4.4.2, $\Omega$ = 3.00 (ASD), $\phi$ = 0.50 (LRFD), $\phi$ = 0.40 (LSD)
2. $d_w$ = screw head diameter $\leq$ ½" .
3. $F_{u1}$ = 60 ksi assumed for VP roof and wall panel material. The above values may be factored by the ratio of $F_u$ for other materials.
4. The above table may be used with other screw types by matching the screw washer diameters, $d_w$.

## b) Pullout Strength (DP 3.7.1.VP)

Screw Pull-Out Strength[1] from Z/C Secondary, (lbs. / Screw)

| Secondary [2] Properties | | #12 – 14 Screws (d = 0.216") | | | |
|---|---|---|---|---|---|
| $F_{u2}$ (ksi) | Thick. $t_2$ (in.) | Nominal Strength $P_{not}$ | Allow. Strength (ASD) | Design Strength (LRFD) | Design Resist. (LSD) |
| 70 | 0.060 | 771 | 257 | 386 | 308 |
| | 0.068 | 874 | 291 | 437 | 350 |
| | 0.073 | 938 | 313 | 469 | 375 |
| | 0.079 | 1015 | 338 | 508 | 406 |
| | 0.088 | 1131 | 377 | 565 | 452 |
| | 0.098 | 1259 | 420 | 630 | 504 |
| | 0.113 | 1452 | 484 | 726 | 581 |

Notes:
1. AISI Section J4.4.1, $\Omega$ = 3.00 (ASD), $\phi$ = 0.50 (LRFD), $\phi$ = 0.40 (LSD)
2. The above values may be factored by the ratio of Fu for other materials.

## D5. Panel Deflections (DP 25.1)

For pressure (+) loading producing compression on the panel outside panel deflections are obtained by using $I_{xe}$(+). For suction (-) loading producing compression on the panel inside, panel deflections are obtained by using $I_{xe}$( - ). Standard BlueScope deflection requirements for panels are listed in Design Procedure DP 6.2

## E. PANEL LOAD TABLES (VP PANEL LOAD TABLES REV 21)

| | | Allowable Uniform Load (psf) | | | | | | | | | | | | | |
|---|---|---|---|---|---|---|---|---|---|---|---|---|---|---|---|
| | | Span = 2.0' | | Span = 3.0' | | Span = 4.0' | | Span = 5.0' | | Span = 6.0' | | Span = 7.0' | | Span = 7.5 | |
| Gage | Fy | P | S | P | S | P | S | P | S | P | S | P | S | P | S |
| 26 Ga. | 50 | 146 | 129 (212) | 97 | 86 (99) | 66 | 57 | 43 | 36 | 28 | 24 | 21 | 18 | 17 | 14 |
| 24 Ga. | 50 | 230 | 129 (258) | 146 | 86 (138) | 84 | 64 (79) | 54 | 51 | 36 | 34 | 26 | 25 | 21 | 20 |
| 22 Ga. | 50 | 353 | 129 (258) | 183 | 86 (172) | 105 | 64 (104) | 66 | 51 (67) | 45 | 44 | 33 | 32 | 26 | 26 |

Notes:
1. P = Pressure on outside of panel, S = suction on outside of face.
2. Tabulated values are Allowable Strength Design (ASD) format in accordance with the 2016 AISI Specification considering bending, shear, web crippling, combined bending and shear and fastener pullover from panel.
3. Panel allowable loads are limited by L/60 deflection.
4. Standard construction assumes (1) fastener per foot . Values in (parenthesis) are for (2) fasteners per foot.
5. All values shown are for 3 or more spans.
6. Fastener pullover strength is included in load tables. For fastener pullout strength from secondary refer to Section D4.

Document and Revision History

| REV. # | DATE | NAME | DESCRIPTION |
|---|---|---|---|
| 0 | 09/20/2017 | R. Benton | Original document (Reproduced to match previous submittals using new documents and formats |
| 1 | 09/2020 | R. Benton | Updating for 2020 FBC release. Separated Panel Rib and Vee Rib into separate docs. Renamed and renumbered to coincide with the actual panel DP |