EVALUATION REPORT OF
BUTLER MANUFACTURING COMPANY
'BUTLERIB II LITE*PANL'

FLORIDA BUILDING CODE 9TH EDITION (2026)
FLORIDA PRODUCT APPROVAL
FL 12759.1-R7
STRUCTURAL COMPONENTS
ROOF DECK

Prepared For:
Butler Manufacturing Company
A Division of BlueScope Buildings North America, Inc.
1540 Genessee Street
Kansas City, MO 64102
Telephone: (816) 968-3000

Prepared By:
Bala Sockalingam, Ph.D., P.E.
Florida Professional Engineer #62240
1216 N Lansing Ave., Suite C
Tulsa, OK 74106
Telephone: (918) 492-5992

This report consists of
Evaluation Report (3 Pages including cover)
UL Constructions (3 Pages)
Installation Details (2 Pages)

Report No. C3050-8
Date: 9.29.2026

BALA SOCKALINGAM
LICENSE
No. 62240
STATE OF
FLORIDA
PROFESSIONAL ENGINEER

This item has been digitally signed and sealed by Bala Sockalingam, PE, on the date indicated.

Printed copies of this document are not considered signed and sealed and this signature must be verified on any electronic copies.

2026.09.29
18:02:12
-05'00'

Manufacturer:	Butler Manufacturing Company
Product Name:	Butlerib II Lite*Panl
Product Description:	Translucent, glass fiber reinforced plastic (FRP) panels. Nominal thickness 1/16 in. formed to the same configuration as Butlerib II metal panels. Maximum width is 36".
Materials:	SunStrong High Strength (8 Oz 200STW): FRP panel consists of a polymer resin with a combination of bidirectional woven roving and chopped strand glass fiber reinforcement. Self-ignition temperature greater than 650°F (343°C) in accordance with ASTM D1929. Maximum average smoke density rating less than 450 where tested in the thickness intended for use in accordance with ASTM E84. Plastic material Class CC2 with burning rate of less than $2^1/_2$ inches per minute in accordance with ASTM D635. ISO-Tuff High Strength (8 Oz 200IFW): FRP panel consists of a brominated isopthalic resin with a combination of bidirectional woven roving and chopped strand glass fiber reinforcement. Self-ignition temperature greater than 650°F (343°C) in accordance with ASTM D1929. Maximum average smoke density rating less than 450 where tested in the thickness intended for use in accordance with ASTM E84. Plastic material Class CC1 with burning extent of less than 1 inch in accordance with ASTM D635.
Support Description:	Min. 16 ga., 55 ksi steel section
Slope:	1/2:12 or greater in accordance with FBC 2026 Section 1507.4.2
Design Uplift Pressure: (Factor of Safety = 2)	52.5 psf at maximum support spacing of 60-1/2" o.c.
Panel Attachment:	Panels will be fastened in accordance with UL Construction No. 125 and manufacturer installation drawings. Fasteners are corrosion resistant as per FBC 2026 Section 1507.4.4. For installation in areas within 3000 ft. of a saltwater coastline, fasteners are corrosion resistant as per FBC 2026 Section 1711. Panels will be installed in accordance with FBC 2026 Section 2609 for CC1 class of plastics for ISO-Tuff panels & CC2 class of plastics for SunStrong panels. Panels shall not be installed in groups H, I-2, I-3.
Test Standards:	Roof assembly tested in accordance with UL580-06 'Uplift Resistance of Roof Assemblies' and FM 4470 (2016) Section 4.6 'Resistance to Foot Traffic'.

Test Standard Equivalency:	ASTM E84-07 procedures utilized in Architectural Testing Inc.'s Reports B8609.03-121-24 & B8609.04-121-18 comply with test procedures prescribed in ASTM E84-24. ASTM D635-03 procedures utilized in Architectural Testing Inc.'s Reports B8609.02-106-18 & B8609.05-106-18 comply with test procedures prescribed in ASTM D635-18. FM 4470 (2016) procedures utilized in ENCON Technology Inc.'s Report C2383-1 comply with test procedures prescribed in FM 4470 (2022) Section 4.6 'Resistance to Foot Traffic'.
Code Compliance:	The product described herein has demonstrated compliance with FBC 2026 Section 1504.3.2, 1504.7, 1507.4 and 2606.4.
Product Limitations:	Design wind loads shall be determined for each project in accordance with FBC 2026 Section 1609 or ASCE 7-22 using allowable stress design. The maximum support spacing listed herein shall not be exceeded. The design uplift pressure for reduced support spacing may be computed using rational analysis prepared by a Florida Professional Engineer. This evaluation report is not applicable in High Velocity Hurricane Zone. Fire classification is not within the scope of this Evaluation Report. Refer to FBC 2026 Section 1505 and current approved roofing materials directory or ASTM E108/UL790 report from an accredited laboratory for fire ratings of this product.
Supporting Documents:	UL 580 Roof Deck Construction No. 125. FM 4470 Test Report ENCON Technology Inc. C2383-1, Reporting Date 9/21/2020 ASTM E84 Test Reports Architectural Testing Inc. B8609.03-121-24, Reporting Date 11/9/2012 B8609.04-121-18, Reporting Date 11/9/2012 ASTM D635 & D1929 Test Reports Architectural Testing Inc. B8609.02-106-18, Reporting Date 11/7/2012 B8609.05-106-18, Reporting Date 11/7/2012

TGKX.125 - Roof Deck Constructions

Design/System/Construction/Assembly Usage Disclaimer

- Authorities Having Jurisdiction should be consulted in all cases as to the particular requirements covering the installation and use of UL Certified products, equipment, system, devices, and materials.
- Authorities Having Jurisdiction should be consulted before construction.
- Fire resistance assemblies and products are developed by the design submitter and have been investigated by UL for compliance with applicable requirements. The published information cannot always address every construction nuance encountered in the field.
- When field issues arise, it is recommended the first contact for assistance be the technical service staff provided by the product manufacturer noted for the design. Users of fire resistance assemblies are advised to consult the general Guide Information for each product category and each group of assemblies. The Guide Information includes specifics concerning alternate materials and alternate methods of construction.
- Only products which bear UL's Mark are considered Certified.

Roof Deck Constructions

See General Information for Roof Deck Constructions

Construction No. 125

August 20, 2009

Wind Uplift — Class 90

Fire Not Investigated

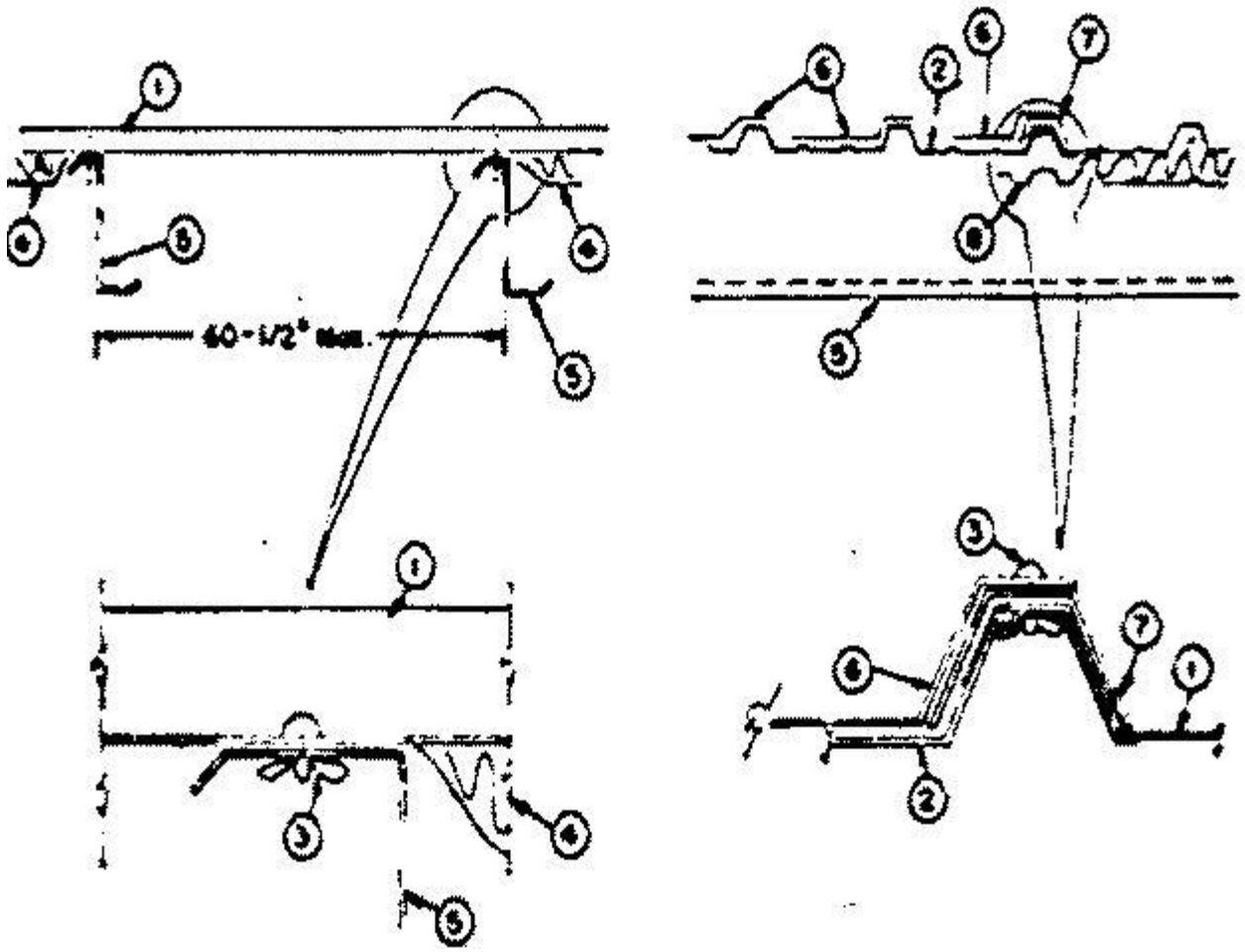

1. **Metal Roof-Deck Panels* —** No. 26 MSG coated steel or 0.026 in. nom thickness aluminum. Panels continuous over two or more spans. End laps to occur over purlins with panels overlapped 6 in. with lap beginning 1 in. from purlin web and extending across purlin flange. A bead of sealant may be used at panel side and end laps.
BUTLER MANUFACTURING, DIV OF BLUESCOPE BUILDINGS NORTH AMERICA INC (View Classification) — Butlerib II

2. **Building Units* —** Translucent, glass fiber reinforced plastic panels. Thickness 1/16 in. Formed to the same configuration as the metal panels. Panels continuous over two spans, total length to be 10 ft 0 in To be used with Item Nos. 6, 7 and 8. The units may consist of a single panel or of an upper and lower skin with an air space in between.
BUTLER MANUFACTURING, DIV OF BLUESCOPE BUILDINGS NORTH AMERICA INC (View Classification) — Lite*Panl

3. **Panel Fasteners —** For panel to purlin connections for either steel or aluminum panels to be No. 12-14 self-drilling, self-tapping hex-head plated steel screws with a 1/2 in. O.D. formed steel washer and a neoprene sealing washer.
Length to be 1 in. for 3 in. max thickness blanket insulation and 1 1/2 in. for over 3 in. thickness.

For panel to panel connections to be same type, 1 in. long for both steel or aluminum panels.

Spacing for panel to purlin connections for steel panels to be 12 in. O.C. located between major ribs.

For aluminum panels to be 6 in. O.C. located 3 in. from the center line on both sides of each major rib.

Spacing at end laps to be the same for both steel or aluminum panels.

Spacing for panel to panel connections to be 30 in. O.C. with an additional fastener in each major rib at end laps.

As Alternate Fasteners — For either steel or aluminum panels with spacing to be the same for panel to purlin connections.

1/4-14 self-tapping plated steel screws with a 5/8 in. O.D. plated steel washer and a bonded neoprene sealing washer.

Length to be 3/4 in. for 3 in. max thickness blanket insulation and 1-1/2 in. for over 3 in. thickness.

Pilot holes to be 3/16 in. diam.

OR: 11/32-12 Type AB self-tapping plated steel screws with a separate 3/4 in. diam plated steel washer and a bonded neoprene sealing washer.

Length to be 7/8 in. for 3 in. max thickness blanket insulation and 1-1/4 in. for over 3 in. thickness.

Pilot holes to be 5/16 in. diam.

OR: Butler "Low Profile Lock Rivets" length to be 1-5/16.

Pilot holes to be 5/16 in. diam.

For Panel-to-Panel Connections: — 1/4-14 by 3/4 in. self-tapping plated steel screws with a 5/8 in O.D. plated steel washer and a bonded neoprene sealing washer.
Pilot holes to be 1/8 in. diam.

OR: Bulter "Low Profile Lock Rivets" length to be 1-5/16.

Pilot holes to be 5/16 in. diam.

Translucent panel Fasteners — For panel to panel and panel to structural connections are Bulter "Low Profile Lock Rivets (Hi-Clinch, self-plugging, blind rivets with neoprene washers.)
Spacing for panel to purlin connections to be 3 in. O.C. for the translucent panel. An additional purlin fastener is to be inserted on each side of the translucent panel. Pilot holes are 5/16 in. diam. Spacing for panel to panel connections to be 15 in. O.C. for the translucent panels.

4. **Insulation —** (Optional) — Any compressible blanket insulation, 4 in. max thickness before compression.

5. **Purlin —** No. 16 MSG min gauge steel (55,000 psi min yield strength).

6. **Lite*Panl Strap —** Coated steel, 0.108 in. thick, 1-3/8 in. wide, 11 in. long with one end formed to the configuration of the panel major ribs.

7. **Corrugation Cap —** No. 12 MSG gauge coated steel. Formed to the configuration of the panel major ribs.

8. **Insulation Retainer —** No. 26 MSG gauge steel, hat shaped, 3 in. wide, 5/8 in. deep, with 3/4 in. legs, or a 2-13/16 in. wide No. 23 MSG steel strap.
Refer to General Information, Roof Deck Construction, (Roofing Materials and Systems Directory) for items not evaluated.

* Indicates such products shall bear the UL or cUL Certification Mark for jurisdictions employing the UL or cUL Certification (such as Canada), respectively.

Last Updated on 2009-08-20

The appearance of a company's name or product in this database does not in itself assure that products so identified have been manufactured under UL's Follow-Up Service. Only those products bearing the UL Mark should be considered to be Certified and covered under UL's Follow-Up Service. Always look for the Mark on the product.

UL permits the reproduction of the material contained in the Online Certification Directory subject to the following conditions: 1. The Guide Information, Assemblies, Constructions, Designs, Systems, and/or Certifications (files) must be presented in their entirety and in a non-misleading manner, without any manipulation of the data (or drawings). 2. The statement "Reprinted from the Online Certifications Directory with permission from UL" must appear adjacent to the extracted material. In addition, the reprinted material must include a copyright notice in the following format: "© 2020 UL LLC"