EVALUATION REPORT OF
BUTLER MANUFACTURING COMPANY
'MR-24 ROOF PANEL'

FLORIDA BUILDING CODE 8TH EDITION (2023)
FLORIDA PRODUCT APPROVAL
FL 12492.3-R7
STRUCTURAL COMPONENTS
ROOF DECK

Prepared For:
Butler Manufacturing Company
A Division of BlueScope Buildings North America, Inc.
1540 Genessee Street
Kansas City, MO 64102
Telephone: (816) 968-3000

Prepared By:
Bala Sockalingam, Ph.D., P.E.
Florida Professional Engineer #62240
1216 N Lansing Ave., Suite C
Tulsa, OK 74106
Telephone: (918) 492-5992

This report consists of
Evaluation Report (3 Pages including cover)
Design Procedure (5 Pages)
Installation Details (3 Pages)

Report No. C2707-3
Date: 8.12.2023

BALA SOCKALINGAM
LICENSE
No. 62240
STATE OF
FLORIDA
PROFESSIONAL ENGINEER

This item has been digitally signed and sealed by Bala Sockalingam, PE, on the date indicated.

Printed copies of this document are not considered signed and sealed and this signature must be verified on any electronic copies.

2023.08.12
09:33:04 -05'00'

Manufacturer:	Butler Manufacturing Company
Product Name:	MR-24
Panel Description:	Standing seam panel with 24" wide coverage and 3" high ribs.
Materials:	Min 24 ga., 50 ksi galvanized coated steel (ASTM A653) or galvalume coated steel (ASTM A792). Corrosion resistant as per FBC 2023 Section 1507.4.3.
Support Description:	Min. 16 ga., 55 ksi steel section.
Slope:	1/4:12 or greater in accordance with FBC 2023 Section 1507.4.2
Design Uplift Pressure:	The allowable uplift loads shown on Page 4 of the Design Procedure were determined from ASTM E1592 and FM 4471 testing and are applicable for the panel and panel to clip connection. Clip fastener, purlins, frames and support connections must be designed to resist all loads. The factors of safety were determined in accordance with FBC 2023 Section 1504.9, ASTM E1592 test standard and the procedures of Section I6.3.1, K2.1.1 and K2.1.2 of the AISI S100-16(2020) w/S2-20.
Panel Attachment:	Clip Type: MR-24 sliding clip – max. 5-1/16" tall. Clip tab: 0.024" thick stainless steel, Clip base: 0.060" thick galvanized steel. Fastened to supports with (1) Scrubolt™ with washer. Clips and fasteners are corrosion resistant as per FBC 2023 Section 1506.7 and 1507.4.4, respectively.
Test Standards:	Roof assembly tested in accordance with ASTM E1592-05(2012) 'Test Method for Structural Performance of Sheet Metal Roof and Siding Systems by Uniform Static Air Pressure Difference' and FM 4471 'Approval Standard for Class I Panel Roofs'.
Test Equivalency:	The test procedures in ASTM E1592-05(2012) comply with test procedures prescribed in ASTM E1592-05(2017).
Code Compliance:	The product described herein has demonstrated compliance with FBC 2023 Section 1507.4.
Product Limitations:	Design wind loads shall be determined for each project in accordance with FBC 2023 Section 1609 or ASCE 7-22 using allowable stress design. The maximum clip spacing listed herein shall not be exceeded. The design pressure for reduced clip spacing may be computed using rational analysis prepared by a Florida Professional Engineer or based on Butler load span table. This evaluation report is not applicable in High Velocity Hurricane Zone. Fire classification is not within the

scope of this Evaluation Report. Refer to FBC 2023 Section 1505 and current approved roofing materials directory or ASTM E108/UL790 report from an accredited laboratory for fire ratings of this product.

Supporting Documents: ASTM E1592 Test Reports
ENCON Technology Inc.
C2218-1, Reporting Date 4/5/2018
C2218-2, Reporting Date 4/6/2018
C2218-3, Reporting Date 4/6/2018
C2245-1, Reporting Date 9/12/2018
C2245-2, Reporting Date 9/12/2018
C2245-3, Reporting Date 9/12/2018

FM 4471 Test Report
FM Approvals
3B1A5.AM, Reporting Date 8/1/1997

A. PANEL CROSS SECTION

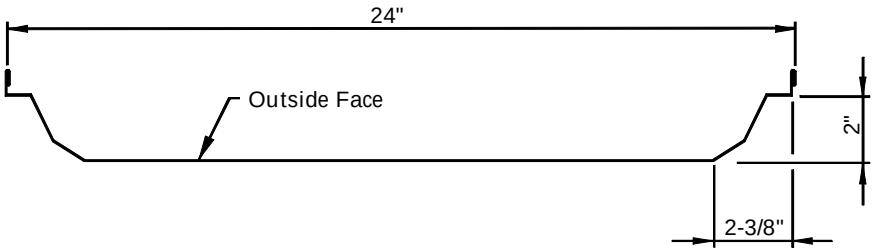

Panels are rolled using ASTM A 653 or A 792 Grade 50M, F_u = 65 ksi. For complete material specifications and material weights refer to Material Specifications Document MS-05-01.

A1. CMR CROSS SECTION

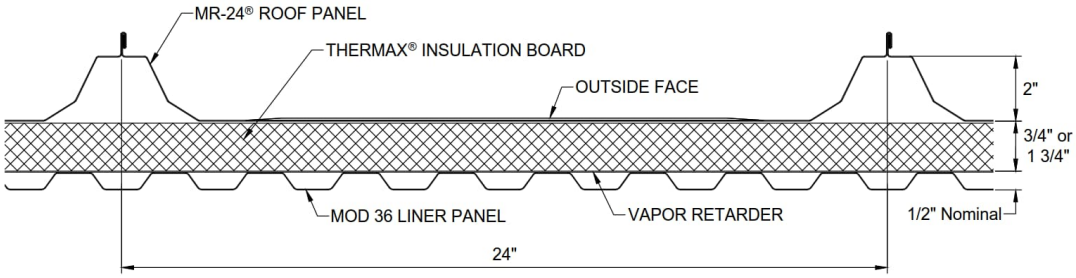

SECTION THROUGH PANEL

The CMR-24® roof system is a field assembled composite roof system comprised of a liner panel, vapor retarder, rigid insulation board and MR-24® roof paneling. This system relies solely on the MR-24 panel for structural support and therefore utilizes the same section properties and design capacities as the MR-24 panel itself. The remaining components are not utilized as load carrying members.

B. PANEL DESIGN

All applicable panel design procedures per AISI Standard S100.

B1. Panel Section Properties / ft. width of panel

Panel Material	Design Thickness (in)	Panel Weight (psf)	F_y (ksi)	F_u (ksi)	Compression on Outside		Compression on Inside	
					S_{xe}+ (in^3)	I_{xe}+ (in^4)	S_{xe}- (in^3)	I_{xe}- (in^4)
24 Ga	0.023	1.17	50	65	0.090	0.200	0.068	0.094
22 Ga	0.029	1.46	50	65	0.118	0.261	0.090	0.132

Notes:
1. Design base metal thickness is exclusive of the panel coatings and finishes.

B2. Flexural Strength (Resistance) kip-in./ ft. width of panel

Nominal Gage	Outside of Panel in Compression, S_{xe} (+)			Inside of Panel in Compression, S_{xe} (-)		
	Nominal Strength M_n	Allowable Strength (ASD)	Design Strength (LRFD)	Nominal Strength M_n	Allowable Strength (ASD)	Design Strength (LRFD)
24 Ga	4.48	2.68	4.03	3.39	1.70	2.72
22 Ga	5.91	3.54	5.32	4.51	2.26	3.61

Notes:

1. Tabulated values are for Allowable and Design Bending Strengths (Resistances) where:
   - Allowable Strength = M_n / Ω_b (ASD), kip-in.
   - Design Strength = $\phi_b M_n$ (LRFD), kip-in.
   - $\Omega_b = 1.67$ (ASD); $\phi_b = 0.90$ (LRFD) for outside of panel in compression
   - $\Omega_b = 2.0$ (ASD); $\phi_b = 0.80$ (LRFD) for inside of panel in compression
2. Nominal Bending Strength: $M_n = S_{xe} F_y$, kip-in.
3. Load reductions or strength (resistance) increases for wind have not been included.
4. Flexural Strength values are for use with gravity loads. Design uplift allowable values for wind are shown in Section B3.

B3. Shear Strength (Resistance) kips / ft. width of panel

ref. AISI Section G

Panel Nominal Gage	Nominal Strength V_n	Allowable Strength (ASD)	Design Strength (LRFD
26 Ga.	1.64	1.03	1.56
24 Ga	2.23	1.39	2.12

Notes:

1. Tabulated values are for Allowable and Design Shear Strengths (Resistances) where:
   - Allowable Strength = V_n / Ω (ASD), kips per ft. width of panel
   - Design Strength (Resistance) = $\phi_v V_n$ (LRFD & LSD), kips per ft. width of panel
   - $\Omega_v = 1.6$ (ASD); $\phi_v = 0.95$ (LRFD)
2. Nominal Shear Strength: V_n per AISI Section G, kips per ft. width of panel.
3. Load reductions or strength (resistance) increases for wind have not been included

B4. Uplift Strength (Resistance) psf

Table 1. 2.0 ≤ Clip Spacing (Sc) ≤ 5.0

Panel Gage	Panel System	Ultimate Strength W_n
24 Ga.	Wide Tab Clip [3]	$-34.4\ S_c + 242$
	Seam Clamp [3]	$-44.8\ S_c + 314$
	Truss Purlin XT Double Clip [3]	-47.7 Sc + 338.6
22 Ga.	Wide Tab Clip [3]	$-49.3\ S_c + 339$
	Clip Spacer Assembly [2]	See Load Table
	Truss Purlin XT Double Clip [3]	-50.5 Sc + 378.4

Notes:

1. Tabulated formulas are for the Ultimate Strength Uplift values and DO NOT include any Safety/Resistance factors. To obtain the Allowable/Limit State value, apply the appropriate Omega (Ω) or Phi factor (ϕ)
   - Allowable Strength Wa = W_n / Ω (ASD), psf
   - Design Strength (Resistance) = ϕW_n (LRFD), psf
   - S_c = purlin spacing, ft.
2. Nominal Strength based on FM 4471 uplift testing. Safety factor $\Omega = 2.0$
3. Nominal Strength (Resistance) determined in accordance with AISI Test Procedure S906 "Standard Procedures for Panel and Anchor Structural Tests as performed by ENCON Technology, Inc. Safety/ Resistance factors based on testing equals - $\Omega = 1.71$ (ASD); $\phi = 0.94$ (LRFD)
4. Resulting values are based on 3 or more continuous spans.
5. Load reductions or strength (resistance) increases for wind have not been include

B5. Load Table

Panel Gage	Panel System	Allowable Uniform Load (PSF)									
		2.0		2.5		3.0		4.0		5.0	
		P	S	P	S	P	S	P	S	P	S
24 Ga.	Wide Tab Clip	327	101	215	91	151	81	87	61	56	41
	Seam Clamp	327	131	215	118	151	105	87	79	56	53
	Truss Purlin XT Double Clip	327	142	215	128	151	114	87	86	56	59
22 Ga.	Wide Tab Clip	436	141	286	126	202	112	115	83	74	54
	Clip Spacer Assembly									74	67
	Truss Purlin XT Double Clip	436	162	286	147	202	133	115	103	74	74

Notes:
1. P = Pressure on outside of panel, S = suction on outside of face.
2. Tabulated values are Allowable Strength Design (ASD) format in accordance with the 2016 AISI Specification considering bending, shear, web crippling, combined bending and shear and fastener pullover from panel.
3. Allowable loads for suction are based on testing per ASTM E1592 tests and interpreted per AISI S100, or FM 4471 uplift testing. See Section B4.
4. All values shown are for 3 or more spans.
5. Fastener pullout strength from secondary member is not included in load tables. See DP 3.7.1.BM

C. Uplift Solution Options

C1. Clip Spacer Assembly

The clip spacer assembly utilizes two **wide tab clips** on the ends of a 12-inch-long hat section to provide added uplift.

Note:
Clip Spacer assembly utilizes Wide Tab clips. Use of clip spacer assembly on a roof requires all clips on that roof to be wide tab clips. Standard and wide tab clips should not be mixed on the same roof.

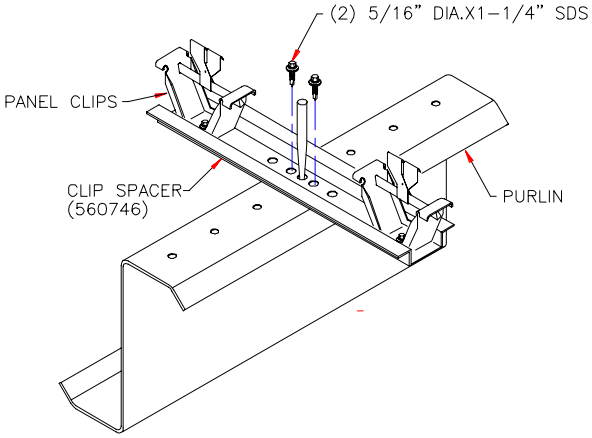

C2. Seam Reinforcement Clamp

Seam reinforcement clamps are used to increase the panel uplift capacity by strengthening the clip-to-panel seam connection. The Designer is cautioned to evaluate the material and erection costs when clamps are required in roof areas not at corners, eaves and rakes.

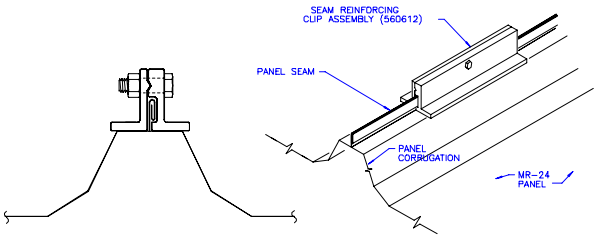

C3. Truss Purlin XT with Two Clip

This solution is only applicable to projects utilizing the Truss Purlin XT product. This solution requires two **wide tab clips** at each truss along each seam. This solution is permissible in all roof zones – interior, perimeter and corners.

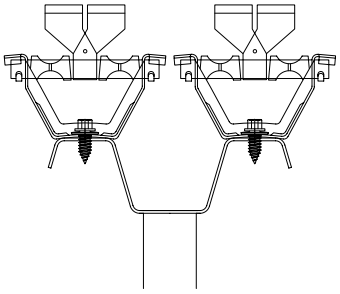

Document and Revision History

REV. #	DATE	DESCRIPTION
0	4/11/2018	Florida Product Approval
1	6/1/2018	Revised Section Property and Load Table values
2	10/1/2018	Revised uplift Formulas (Table1, Section B4) and Allowable uplift values (Load Table, Section B5) based on test results for wide tab and seam clamp options.
3	8/31/2020	Renumbered Document to more closely mimic the DP. Updated for 2020 FBC product approvals. Corrected load table values.
4	8/2023	Removed code-year from AISI reference