Evaluation Report

"Englert® Series 1300"

Metal Roof Assembly

Manufacturer:

Englert, Inc.

1200 Amboy Avenue
Perth Amboy, NJ 08862
(732) 826-8614

for

Florida Product Approval

FL 11727.6 R19

Florida Building Code 9th Edition (2026)

(HVHZ)

Method: **1 - D**
Category: **Roofing**
Sub - Category: **Metal Roofing**

Product: "Series 1300" Roof Panel
Material: Aluminum
Panel Thickness: 0.032 "
Support: Wood Deck

This item has been digitally signed and sealed by James L. Buckner, P.E., on this date below. Printed copies of this document are not considered signed and sealed, and the signature must be verified on any electronic copies.

Prepared by:
James L. Buckner, P.E., SECB
Florida Professional Engineer # 31242
Florida Evaluation ANE ID: 1916
Project Manager: Diana Galloway
Report No. 26-805-S1300-A3W-HZ-ER
(Revises 25-716-S1300-A3W-HZ-ER, FL11727.6 R18)
Date: 08/06/2026

JAMES L. BUCKNER
LICENSE
No 31242
STATE OF FLORIDA
PROFESSIONAL ENGINEER

James L. Buckner, P.E.
FL31242
2026.08.06 11:03:15 -04'00'

Contents:

Evaluation Report Pages 1 – 11

Manufacturer:	**Englert, Inc.** 1200 Amboy Avenue Perth Amboy, NJ 08862 (732) 826-8614 http://www.englertinc.com/
Product Name:	**"Series 1300"**
Product Category:	Roofing
Product Sub-Category	Metal Roofing
Compliance Method:	State Product Approval Rule 61G20-3.005 (1) (d)
Product/System Description:	"Series 1300" Roof Panel 0.032" Aluminum Standing Seam roof panel mechanically attached to Wood Deck with panel clips & screws.
Product Assembly as Evaluated:	Refer to Page 4 of this report for product assembly components/materials & standards: 1. Roof Panel 2. Panel Clip 3. Fasteners 4. Seam Adhesive 5. Underlayment
Support:	**Type:** Wood Deck (Design of support and its attachment to support framing is outside the scope of this evaluation.) **Description:** • 15/32" or greater plywood • or Wood plank (min. specific gravity of 0.42)
Slope:	**Minimum slope:** **1/2:12** (Non-HVHZ) **1:12** (HVHZ) and in compliance with FBC 1515.2 In compliance with FBC Chapter 15 based on the type of roof covering, applicable code sections and in accordance with manufacturer's recommendations.
Performance:	Wind Uplift Resistance: • Design Uplift Pressure: **REFER TO TABLE A** (Refer to "Table A" details herein)

Performance Standards: The product described herein has demonstrated compliance with:

- TAS 125-03 – *Standard Requirements for Metal Roofing Systems*

Code Compliance: The product(s) described herein have demonstrated compliance with the performance standards listed above as referenced in the:
Florida Building Code 9th Edition (2026)
Florida Building Code 9th Edition (2026), HVHZ

Evaluation Report Scope: This product evaluation is limited to compliance with the structural requirements of the Florida Building Code, as related to the scope section to Florida Product Approval Rule 61G20-3.001.

Limitations and Conditions of Use:

Scope of "Limitations and Conditions of Use" for this evaluation:

This evaluation report for "Optional Statewide Approval" contains technical documentation, specifications and installation method(s) which include "Limitations and Conditions of Use" throughout the report in accordance with Rule 61G20-3.005. Per Rule 61G20-3.004, the Florida Building Commission is the authority to approve products under "Optional Statewide Approval".

- This report is a building code product evaluation per FLPE rule (FAC) 61G15-36 to comply with Florida product approval rule (FAC) 61G20-3. This evaluation report is part of the Florida Building Commission approval for the listed code related criteria. This report by James Buckner, P.E. and CBUCK Engineering is not a design certification of code compliance construction submittal documentation, per FBC section 107, for any individual structure, site specific or permit design.
- Metal roof and hip ridge covers are outside the scope of this evaluation. For installations outside HVHZ refer to FBC Section 1504.3.1.1. Inside HVHZ areas, Refer to FBC Section 1517.6
- Fasteners shall be corrosion resistant in accordance with applicable sections of FBC. Inside HVHZ fasteners shall comply with FBC Section 1517.5
- Installations located within 3000 feet of a saltwater coastline shall comply with FBC Section 1711 in accordance with authorities having jurisdiction.
- All insulation fasteners, membrane fasteners and stress plates shall comply with FBC Section 1520.4 as applicable.
- The design pressures listed herein is applicable to all roof pressure zones. Rational analysis or extrapolation to enhance pressure is not permitted in HVHZ zones.
- Maximum panel lengths, valleys & panel accessories shall comply with Roofing Application Standard RAS 133 as applicable in HVHZ areas.
- Deck shall be in compliance with applicable building code.
- Fire Classification is outside the scope of Rule 61G20-3 and is therefore not included in this evaluation.
- All panels shall be permanently labeled with the manufacturer's name and/or logo.
- This evaluation report approves the product assembly as described in this report for use in the High Velocity Hurricane Zone (HVHZ) code section. (Dade & Broward Counties)

Option for application outside "Limitations and Conditions of Use"

Rule 61G20-3.005(1)(e) allows engineering analysis for "project specific approval by the local authorities having jurisdiction in accordance with the alternate methods and materials authorized in the Code". Any modification of the product as evaluated in this report and approved by the Florida Building Commission is outside the scope of this evaluation and will be the responsibility of others.

Quality Assurance: The manufacturer has demonstrated compliance of roof panel products in accordance with the Florida Building Code and Rule 61G20-3.0005 (3) for manufacturing under a quality assurance program audited by an approved quality assurance entity through Keystone Certifications, Inc. (FBC Organization ID# QUA 1824).

Components/Materials (by Manufacturer):

Roof Panel: **Englert Series 1300**

Material:	Aluminum
Thickness:	0.032” (min.)
Panel Widths:	16” max. OR 20” max. Coverage per Table A
Rib Height:	1-1/2”
Alloy Type:	3105-H14 (in compliance with ASTM B 209)
Corrosion Resistance:	Per FBC Section 1518.9

Roof Panel Clips:

Panel Clip: #1:

Product Name:	Englert “Series 1300 Fixed Clip”
Englert Part #’s:	05084D (Galv. Steel) or 05084E (Stainless Steel)
Type:	One-piece, fixed clip
Material:	Galvanized Steel or Stainless Steel
Thickness:	24 gauge
Yield Strength:	40 ksi min.
Dimensions:	6-1/4”(long) x 1-5/8”(tall) x 1-1/2”(wide)
Corrosion Resistance:	Per FBC Section 1506.7

Panel Clip: #2:

Product Name:	Englert “Series 1300 Floating Clip”
Englert Part #’s:	05815A
Type:	Two-piece, floating clip
Material:	Stainless Steel
Thickness:	Clip Tab: .015” Stainless Steel Clip Base: .030” Stainless Steel
Yield Strength:	40 ksi min.
Dimensions:	1-5/8” (tall) x 3/4” (long) x 3” (wide)
Corrosion Resistance:	Per FBC Section 1506.7

Panel Clip: #3:

Product Name:	Englert “Series 1300 3” Fixed Clip”
Englert Part #’s:	05828J (Galv. Steel) or 05828K (Stainless Steel)
Type:	One-piece, fixed clip
Material:	Galvanized Steel or Stainless Steel
Thickness:	24 gauge
Yield Strength:	40 ksi min.
Dimensions:	3”(long) x 1-5/8”(tall) x 1-1/4”(wide)
Corrosion Resistance:	Per FBC Section 1506.7

Fastener:

Type:	Pancake-Head Self-Tapping Wood Screw
Size :	#10 x 1”
Corrosion Resistance:	Per FBC 1518.9
Standard:	Per FBC 1517.5

Components& Materials: (by Others)

Seam Adhesive/Sealant:

Product Name:	Bostik 70-05
Type:	One component, polyurethane adhesive
Application Size:	1/8" – 1/4" bead
Application Location:	along female flange the full length of panel 1 bead for 90° panel seam, 2 beads for 180°

(Design of adhesive is outside the scope of this evaluation.)

Underlayment:

Non-HVHZ:

One of the following per FBC 9th Edition (2026), Section 1507.1.1.
ASTM D226, D1970, D4869, D6757, D8257
Installation shall comply with FBC including Sections 1507.1.1.1, 1507.1.1.2 where applicable and in accordance with roof manufacturer's recommendations.

HVHZ:

One of the following per FBC 9th Edition (2026), Section 1518.2.
ASTM D226, D1970, D4869, D6757, D8257
Installation shall comply with FBC including Sections 1518.2, 1518.2.1, Table, 1518.2.1, 1518.2.2, 1518.2.3, 1518.2.4 where applicable and in accordance with roof manufacturer's recommendations.

Fire Barrier Board*:*

Any approved fire barrier with current approval.
½" min. fire barrier shall be anchored with min. 12 Ga. X 1-1/4" galvanized annular ring shank roofing nails with 32 ga. tin tags spaced 6" o.c. in rows at perimeter and overlaps, and two intermediate staggered rows at 12" o.c.
(Fire classification is outside the scope of this evaluation. Refer to current fire listings for installation of fire barrier & fire rating of this system.)

Installation:

Installation Method:
(Refer to **"TABLE A"** below, drawings at the end of this evaluation report.)

- Clip Spacing: **Refer to "TABLE A" Below**
  (along the length of the panel)
- Rib Interlock: **Refer to "TABLE A" Below**
  (Panel ribs shall be mechanically seamed per below.)
- Seam Adhesive: Refer to Table "A" & Drawings Page 8.
  (Apply along male flange the full length of the panel.)
- Minimum fastener penetration thru bottom of support, 3/16".
- For panel construction at the end of panels, refer to manufacturer's instructions and any site specific design.

TABLE "A" ALLOWABLE LOADS (HVHZ)
"Series 1300" (0.032" Aluminum) Roof Panel attached to Wood Deck

	Panel Width (max.)	**Deck Thickness** (min.)	**Panel Clip**	**Clip Spacing** (max.)	**# of Fasteners per Clip**	**Seam Adhesive**	**Panel Seam** (min.)	**Design Pressure (ASD)**
1	16"	15/32"	#3	6"	2	NO	90°	**- 89.75 PSF**
2	16"	15/32"	#3	6"	2	YES	90°	**- 138.5 PSF**
3	16"	15/32"	#1	24"	4	NO	180°	**- 60 PSF**
4	16"	19/32"	#1	8"	4	NO	180°	**- 123.5 PSF**
5	20"	15/32"	#3	12"	2	YES	90°	**- 86.25 PSF**
6	20"	15/32"	#3	8"	4	YES	90°	**- 97.5 PSF**
7	20"	15/32"	#2	16"	2	NO	180°	**- 101.25 PSF**
8	20"	15/32"	#2	8"	2	NO	180°	**- 142.5 PSF**
9	20"	15/32"	#2	8"	2	YES	180°	**-180 PSF**

Notes:
1. Allowable design pressure(s) for allowable stress design (ASD).
2. Panel Widths listed are maximum, widths less than max. listed are acceptable alternatives.

Install the "Series 1300" roof panel assembly in compliance with the installation method listed in this report and applicable code sections of FBC 9th Edition (2026). The installation method described herein is in accordance with the scope of this evaluation report. Refer to manufacturer's installation instructions as a supplemental guide for attachment.

Referenced Data:

1. TAS 125 Uplift Test (#1-2)
   By Intertek Testing
   Report No. K2233.01-450-18, Specimens #1-3, Date: 08/03/20
2. TAS 125 Uplift Test (#3)
   By Architectural Testing, Inc. (FBC Organization ID# TST 1558)
   Report No. 01-46064.01-122-18, Specimen #1, Date: 12/3/03, R 07/21/11
3. TAS 125 Uplift Test (#4)
   By Hurricane Test Laboratory, LLC. (FBC Organization ID# TST 1527)
   Report No. 0155-0404-04, Specimen #2, Date: 5/21/04
4. TAS 125 Uplift Test (#7-9)
   By Architectural Testing, Inc. (FBC Organization ID# TST 1558)
   Report No. B8192.01-109-18-R1, Specimen #1-4, Date: 2/1/13
5. TAS 125 Uplift Test (#5-6)
   By Intertek/Architectural Testing, Inc.
   Report No. F1488.01.109-18-r2, Specimen #1-3, Date: 5/5/16
6. Quality Assurance
   Keystone Certifications, Inc.
   Englert, Inc. Licensee #420
7. Certification of Independence
   By James L. Buckner, P.E. @ CBUCK Engineering

Tests Performed But Not Evaluated In This Report:

1. TAS 100 Test
   By Architectural Testing, Inc.
   Report No. 01-32797.01 Date: 11/5/08
2. TAS 114, App G Test
   By Intertek Testing, Inc.
   Report No. G5733.01-106-18 Date: 1/5/17
3. ASTM G23 & B117
   By BASF, Date: 11/15/04

Installation Method
Englert, Inc.
"Series 1300" (0.032" Aluminum) Roof Panel attached to Wood Deck

Drawings

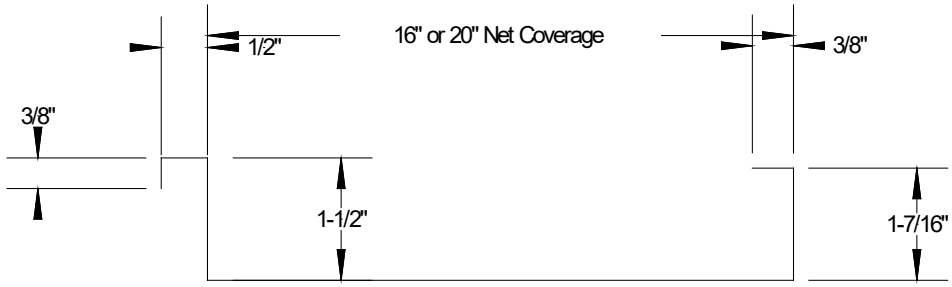

Panel Profile

Panel Clip #1
Englert "Series 1300
Fixed Clip"
(Part #05084D – Galvanized) or
(Part #05084E – Stainless Steel)

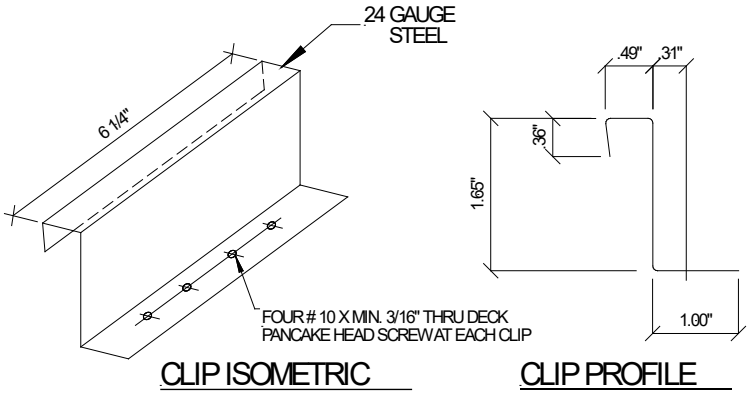

Panel Clip #2
Englert "Series 1300
Floating Clip"
(Part #05815A - Stainless Steel)

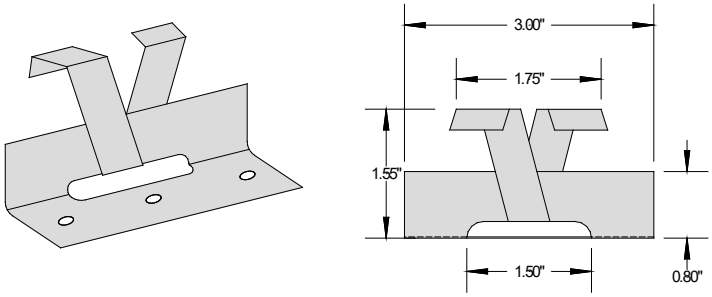

Panel Clip #3
Englert "Series 1300
3" Fixed Clip"
(Part #05828J – Galvanized) or
(Part #05828K – Stainless Steel)

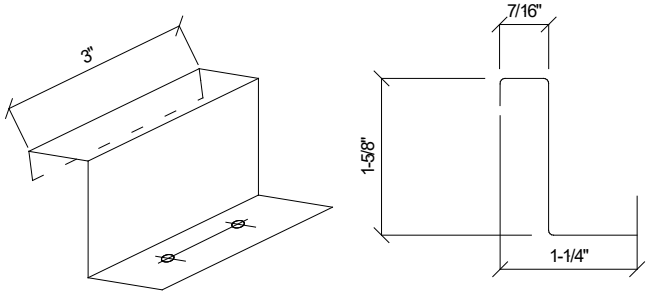

Series 1300 Panel Clips

Installation Method
Englert, Inc.
"Series 1300" (0.032" Aluminum) Roof Panel attached to Wood Deck

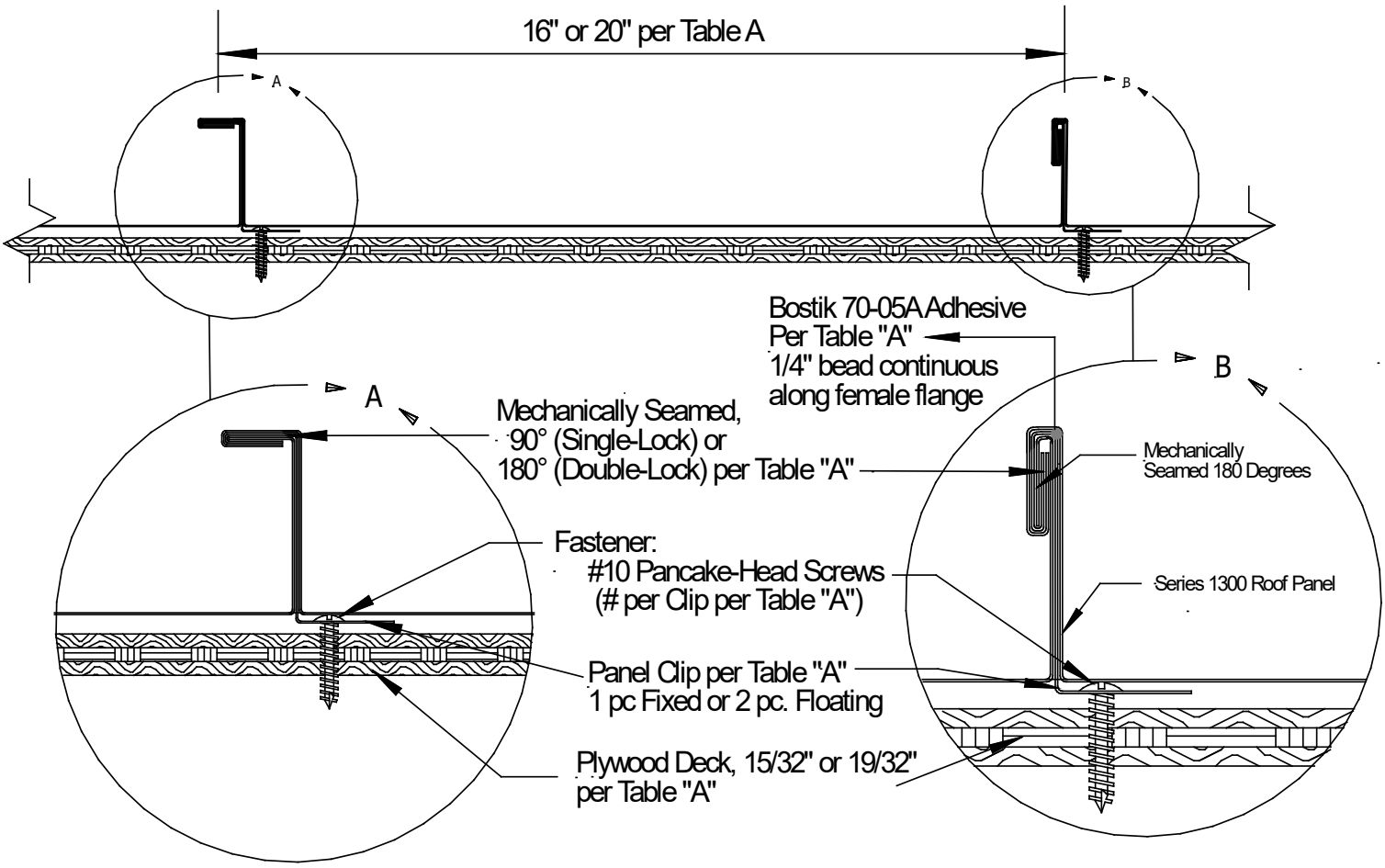

Typical Assembly Profile View
(Typical Fastening Pattern Across Width)

Installation Method
Englert, Inc.
"Series 1300" (0.032" Aluminum) Roof Panel attached to Wood Deck

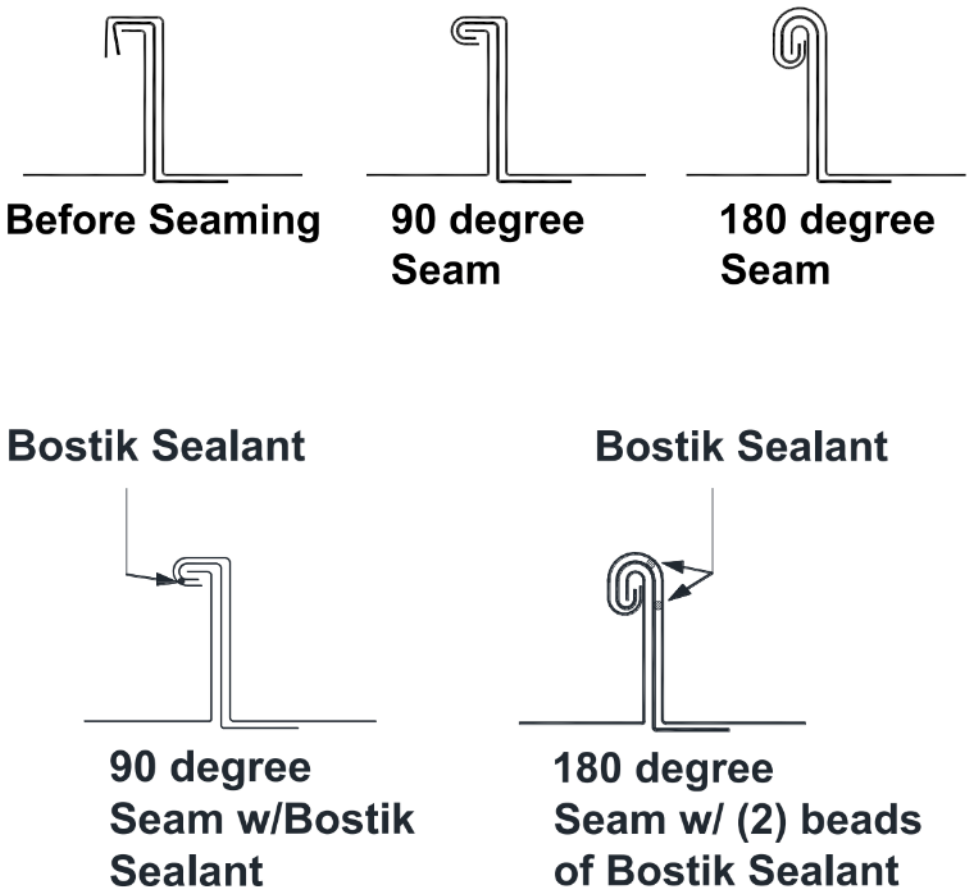

Typical Panel Seams &
Panel Adhesive Location(s)

Installation Method
Englert, Inc.
"Series 1300" (0.032" Aluminum) Roof Panel attached to Wood Deck

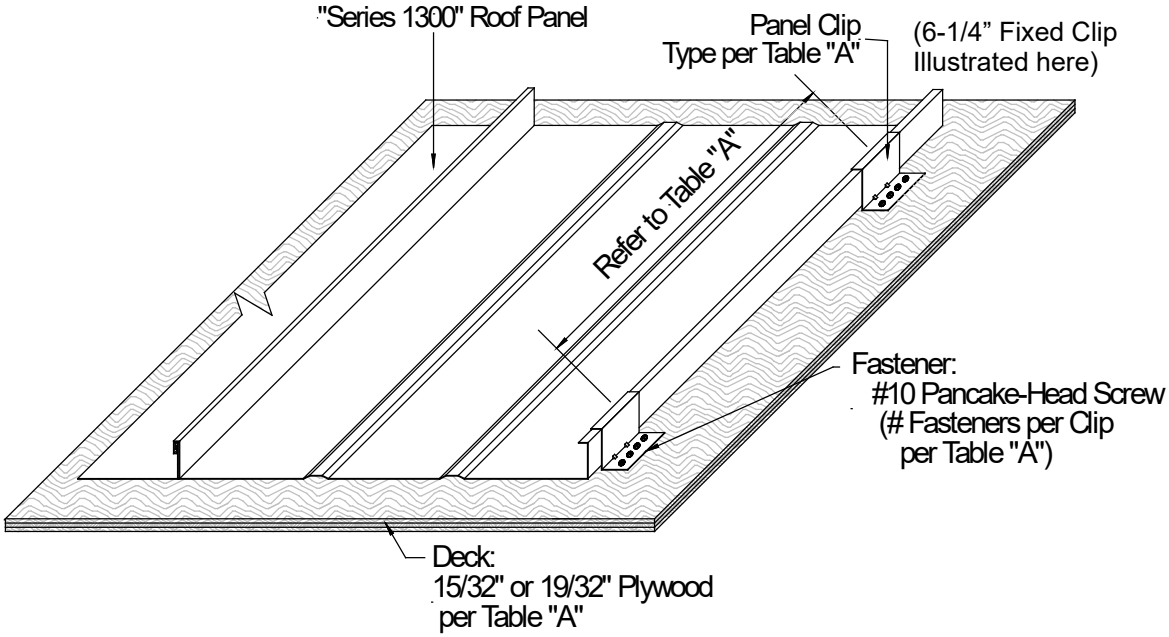

Typical Roof Assembly
Isometric View

TABLE "A" ALLOWABLE LOADS (HVHZ) "Series 1300" (0.032" Aluminum) Roof Panel attached to Wood Deck								
	Panel Width (max.)	**Deck Thickness** (min.)	**Panel Clip**	**Clip Spacing** (max.)	**# of Fasteners per Clip**	**Seam Adhesive**	**Panel Seam** (min.)	**Design Pressure (ASD)**
1	16"	15/32"	#3	6"	2	NO	90°	**- 89.75 PSF**
2	16"	15/32"	#3	6"	2	YES	90°	**- 138.5 PSF**
3	16"	15/32"	#1	24"	4	NO	180°	**- 60 PSF**
4	16"	19/32"	#1	8"	4	NO	180°	**- 123.5 PSF**
5	20"	15/32"	#3	12"	2	YES	90°	**- 86.25 PSF**
6	20"	15/32"	#3	8"	4	YES	90°	**- 97.5 PSF**
7	20"	15/32"	#2	16"	2	NO	180°	**- 101.25 PSF**
8	20"	15/32"	#2	8"	2	NO	180°	**- 142.5 PSF**
9	20"	15/32"	#2	8"	2	YES	180°	**-180 PSF**

Notes:
1. Allowable design pressure(s) for allowable stress design (ASD).
2. Panel Widths listed are maximum, widths less than max. listed are acceptable alternatives.