SIMPSON STRONG-TIE COMPANY INC.
5956 West Las Positas Boulevard
Pleasanton, CA 94588
(800) 999-5099
www.strongtie.com

SIMPSON STRONG-TIE® MISCELLANEOUS CONNECTORS

CSI Division: 06 00 00—Wood, Plastic, and Composites
CSI Section: 06 05 23—Wood, Plastic, and Composite Fastenings

1.0 SCOPE OF EVALUATION

1.1 Compliance to the following codes & regulations:

- 2021, 2018, 2015, and 2012 International Building Code® (IBC)
- 2021, 2018, 2015, and 2012 International Residential Code® (IRC)
- 2023 City of Los Angeles Building Code (LABC) - attached Supplement
- 2023 City of Los Angeles Residential Code (LARC) - attached Supplement

1.2 Evaluated in accordance with:

- IAPMO UES EC 002

1.3 Properties assessed:

- Structural

2.0 PRODUCT USE

Simpson Strong-Tie® miscellaneous connectors are used as wood framing connectors in accordance with Section 2304.10.4 of the IBC. The products may be used in structures regulated under the IRC when an engineered design is submitted in accordance with Section R301.1.3 of the IRC.

3.0 PRODUCT DESCRIPTION

3.1 Product Information

3.1.1 RTC Rigid Tie Connectors Series: The RTC Rigid Tie connectors are used to attach two horizontal wood joist members to a vertical post forming a 90-degree corner. The RTC22Z, RTC2Z, APRTC2, and RTC42 are fabricated from No. 18 gauge steel, and the RTC44 is fabricated from No. 14 gauge steel. Table 1 and Figure 1 of this report provide required member sizes, fastener schedules, allowable loads, connector dimensions, and a typical installation detail.

3.1.2 LSCZ Adjustable Stringer Connector: The LSCZ adjustable stringer connector is a concealed connector used to attach a stair stringer to a supporting header or rim joist. The LSCZ is field-adjusted with a one-time bend at the designated bend line to accommodate variable stair stringer pitches. The LSCZ may be used with either solid or notched stair stringers. The LSCZ is fabricated from No. 18 gauge steel. Table 2 and Figure 2 of this report provide the required member sizes, fastener schedules, allowable loads, connector dimensions, and installation details.

3.1.3 DJT14 Deck Joist Tie: DJT14 Deck Joist Tie connector is used to attach joists to posts and is fabricated from No. 14 gauge steel. Table 3 and Figure 3 of this report provide fastener schedules, allowable loads, connector dimensions, and a typical installation detail.

3.1.4 CJTZ and HCJTZ Connectors: The CJTZ and HCJTZ connectors are T-shaped connectors used to provide a concealed connection between a joist and a supporting header or post. The CJTZ is fabricated from No. 12 gauge steel. The HCJTZ is fabricated from No. 10 gauge steel. The CJTZ and HCJTZ connectors are attached to a supporting wood member with SDS wood screws and to the routed end of a joist using steel pins with chamfered ends. Table 4 and Figure 4 of this report provide model numbers, required member sizes, fastener schedules, allowable loads, connector and component dimensions, and installation details.

3.1.5 DS Drywall Stops: The DS Drywall Stops are used as backing support for gypsum wallboard edges at wall corners and wall ceiling intersections and are fabricated from No. 20 gauge steel. Use of the DS Drywall Stops is limited to non-fire-resistance-rated construction and to nonstructural applications. The DS Drywall Stops shall not be used in wall construction designated as braced wall panels conforming to Section 2308.6 of the 2021, 2018, and 2015 IBC; Section 2308.9.3 of the 2012 IBC; Section R602.10.1 of the 2021, 2018, 2015, and 2012 IRC; or Section R602.10.1.1 of the 2009 IRC. Table 5 and Figure 5 of this report provide fastener and spacing schedules, connector dimensions, and a typical installation detail.

3.1.6 Truss Clips: STC, STCT, DTC, and HTC4 truss clips are used as alignment control between a roof truss and non-gravity-load-bearing walls. The 1½-inch-long (38.1 mm) slots permit vertical truss chord movement. These connectors are formed from No. 18 gauge galvanized steel. Figure 6 and Table 6 of this report provide dimensions, required fasteners, and allowable loads.

3.1.7 KBS1Z Knee-Brace Stabilizer: The KBS1Z knee-brace stabilizer is an adjustable connector used to attach a knee brace to a post or beam. The KBS1Z may also be used

The product described in this Uniform Evaluation Service (UES) Report has been evaluated as an alternative material, design or method of construction in order to satisfy and comply with the intent of the provision of the code, as noted in this report, and for at least equivalence to that prescribed in the code in quality, strength, effectiveness, fire resistance, durability and safety, as applicable, in accordance with IBC Section 104.11. This document shall only be reproduced in its entirety.

Copyright © 2023 by International Association of Plumbing and Mechanical Officials. All rights reserved. Printed in the United States. Ph: 1-877-4IESRPT • Fax: 909.472.4171 web: www.uniform-es.org • 4755 East Philadelphia Street, Ontario, California 91761-2816 – USA

to attach a beam to a post in either a continuous or end condition. The KBS1Z is field-adjusted with a one-time bend at the designated bend line to accommodate variable angles of the knee brace. The KBS1Z is fabricated from No. 16 gauge steel. Table 7 and Figure 7 of this report provide fastener schedules, allowable loads, component dimensions, and installation details.

3.1.8 CBTZ Connector: The CBTZ connector is a round, tube-shaped connector used to provide a concealed connection between a beam and supporting post and is fabricated from No. 12 gauge steel. The CBTZ connector is attached to beam and post wood members with steel pins with chamfered ends. Table 8 and Figure 8 of this report provide model numbers, required member sizes, fastener schedules, allowable loads, connector and component dimensions, and installation details.

3.1.9 AP Connectors: The APL, APT, APA, APDJT, APB, APA21, APLH, and APHH are decorative connectors attached to wood members. The APL, APT, APA, APDJT, and APB use the Simpson Strong-Tie SDWS22312DBB or SDWS22512DBB wood screws inserted through the STN22 Hex Head Washer. The APA21 and APLH use SD10112DBB screws. The APHH uses SDWS22312DBB wood screws inserted through the STN22 Hex Head Washer and also the SDS25300 screws. The APL, APDJT, and APT ties are used to connect wood beams to wood columns. The APA is used as a heavy angle, while the APA21 is used as a light rafter tie. The APB is used to attach a wood post to a foundation. The APLH and APHH are hangers used to connect wood beams. The AP connectors are fabricated from No. 12 gauge steel, except the APA21 and APLH, which are fabricated from No. 14 gauge steel. Table 9 and Figure 9 of this report provide model numbers, fastener schedules, allowable loads, connector and component dimensions, and installation details. This includes the Avant series, which has a "V" in the name. Avant products have the same materials, fasteners, and allowable loads but with a square top. Some dimensions may be different and are noted in the tables.

3.1.10 LSSJR/L Field Adjustable Jack Hanger Series: The LSSJR/L are mirror-image hangers skewed at 45 degrees right and left, respectively. The LSSJR/L is used to connect a rafter to a hip or valley member. The LSSJR/L is field-adjusted with a one-time bend at the designated bend lines to accommodate variable jack skews. The LSSJR/L is field-adjusted by a rotatable seat to accommodate variable roof pitches. The LSSJR/L are formed from No. 18 gauge galvanized steel. Table 10 and Figure 10 of this report provide fastener schedules, allowable loads, connector dimensions, and a typical installation detail.

3.1.11 LSSR Field Adjustable Slopeable and Skewable Rafter Hanger Series: The LSSR is a face-mount hanger used to connect common rafters to ridge beams and jack rafters to hips or ridges. The LSSR is field-adjusted using its built-in rotating hinge to accommodate variable roof pitches. The LSSR may be bent at the perforated regions to accommodate jack rafter skews up to 45 degrees. The LSSR allows the user to install rafters tacked in place and to be used on I-joists and sawn lumber. The LSSR is formed from No. 18 gauge and No. 16 gauge galvanized steel. Table 11 and Figure 11 of this report provide fastener schedules, allowable loads, connector dimensions, and a typical installation detail.

3.1.12 MMHC Hinged Roof Connector: The MMHC is a hinged roof connector that attaches a roof rafter to a ceiling joist using 10d by 1½-inch-long nails. The MMHC allows for the roof to be constructed and transported flat and then reopened on the job site to the appropriate roof pitch. The MMHC may also be used to attach a roof rafter to a knee wall stud. The MMHC is fabricated from No. 18 gauge galvanized steel. Tables 12a and 12b, and Figure 12 of this report provide fastener schedules, allowable loads, connector and component dimensions, and installation details.

3.1.13 ML Angle: The ML is an angle connector that attaches wood members to each other with SDS25112 screws. The ML connectors are fabricated from No. 12 gauge steel. Table 13 and Figure 13 of the report provide model numbers, fastener quantities, allowable loads, connector dimensions, and installation information.

3.1.14 BVLZ Brick Veneer Ledger Connector: The BVLZ consists of a ledger plate and a compression strut, both fabricated from No. 12 gauge steel. The BVLZ attaches a deck ledger to the structural framing through a brick veneer using SD9112 screws into the deck ledger and SDWH271400G screws into the rim board. Table 14 and Figure 14 of the report provide model numbers, fastener quantities, allowable down loads, connector dimensions, and installation information.

3.1.15 MMLU Face-Mount Hangers for Factory-Built Structures: The MMLU Face Mount Hangers allow common floor joists to be attached to headers with ease due to the special nailing grids that replace traditional nail holes. The hangers are constructed out of either No. 18 or 20-gauge galvanized steel in 8 different sizes and use either 8d by 1½-inch-long or 10d by 1½-inch-long nails in a variety of different nailing patterns depending on the specific loading requirements. Table 15 and Figure 15 of the report provide model numbers, fastener quantities, allowable down loads, connector dimensions, and installation information.

3.1.16 MMH8 Roof Tiedown: The MMH8 is a roof uplift connector used to connect common rafters and trusses to plates. It uses special nailing grids that replace traditional nail holes, which allow for easy installation and different nail patterns for specific loading conditions. The MMH8 is constructed of No. 18 gauge galvanized steel and may be secured with 8d by 1½-inch-long nails. Table 16 and Figure 16 of the report provide model numbers, fastener quantities, allowable down loads, connector dimensions, and installation information.

3.1.17 RST-3 Roof Tiedown: The RST-3 is a roof uplift connector used on common rafters and trusses to secure them to wall studs. The tiedown may be bent to shape on-site in order to be secured to either the wide face or narrow face of the stud providing different loading capacities and installation flexibility. The RST-3 is constructed of No. 18 gauge galvanized steel and shall be secured with 8d by 1½-inch-long nails as well as SD9112 screws. Table 16 and Figure 16 of the report provide model numbers, fastener quantities, allowable down loads, connector dimensions, and installation information.

3.1.18 SCLC Stair Cassette Ledger Connector: The SCLC ledger connector is used to attach a ledger to a supporting header or rim joist. The SCLC is fabricated from No. 14 gauge steel. Table 17 and Figure 17 of this report provide required member sizes, fastener schedules, allowable loads, connector dimensions, and installation details.

3.2 Materials

3.2.1 Steel: The connectors described in this report are manufactured from galvanized steel complying with ASTM A653, SS designation, with a minimum yield strength, F_y, of 33,000 psi (227 MPa) and a minimum tensile strength, F_u, of 45,000 psi (310 MPa), except for the DS Drywall Stop connector, which is fabricated from galvanized steel complying with ASTM A653, FS designation, without specified minimum yield and tensile strengths. Base metal thicknesses for the connectors in this report are as follows:

GAUGE	BASE METAL THICKNESS (in.)
No. 12	0.0975
No. 14	0.0685
No. 16	0.0555
No. 18	0.0455
No. 20	0.0335

For **SI**: 1 inch = 25.4 mm

The connectors have a minimum G90 zinc coating specification in accordance with ASTM A653. Some models may also be available with either a G185 zinc coating (denoted by model numbers ending in the letter Z) or with a batch hot-dipped galvanized coating with a minimum specified coating weight of 2.0 ounces of zinc per square foot of surface area (600 g/m^2), total, for both sides in accordance with ASTM A123 (denoted by model numbers ending with the letters HDG). The AP Connectors are only fabricated with a G185 coating with a black color coating. With the exception of the RTC2Z and RTC22Z, which are only fabricated in ZMAX G185 coating, model numbers in this report do not list the Z or HDG ending, but the information shown applies. The holder of this report (Simpson Strong-Tie Company Inc.) or lumber treater shall be contacted for recommendations on minimum corrosion resistance of steel connectors in contact with the specific proprietary preservative-treated or fire-retardant-treated lumber.

3.2.2 Wood: Wood members with which the connectors are used shall be either sawn lumber or engineered lumber having a minimum specific gravity of 0.50 (minimum equivalent specific gravity of 0.50 for engineered lumber) and having a maximum moisture content of 19 percent (16 percent for engineered lumber). Engineered lumber includes glued-laminated lumber (glulam) and parallel strand lumber (PSL). Glulams shall comply with applicable AITC Standards referenced in IBC Section 2306. PSL shall be approved based on requirements in ASTM D5456. The thickness (depth) of the wood main member shall be equal to or greater than the length of the fasteners specified in the tables in this report, unless the reduced penetration effect on the load calculation per the applicable ANSI/AWC National Design Specification for Wood Construction and its Supplement (NDS) is taken into account, or as required by wood member design, whichever is greater.

3.2.3 Fasteners: Common nails shall comply with ASTM F1667 in accordance with IBC Section 2303.6 when used with connectors in this report. The nails shall be of carbon steel − bright or Hot-Dip Galvanized − and shall have the following minimum fastener dimensions and bending yield strengths (F_{yb}):

FASTENER	SHANK DIAMETER (inches)	FASTENER LENGTH (inches)	F_{yb} (psi)
8d x 1½	0.131	1½	100,000
8d	0.131	2½	100,000
10d x 1½	0.148	1½	90,000
10d x 2½	0.148	2½	90,000
10d	0.148	3	90,000
16d Sinker	0.148	3¼	90,000
16d	0.162	3½	90,000

For **SI**: 1 inch = 25.4 mm, 1 psi = 6.895 kPa.

Fasteners used in contact with fire-retardant-treated or preservative-treated lumber shall comply with Section 2304.10.5 of the 2021, 2018, and 2015 IBC; Section 2304.9.5 of the 2012 and 2009 IBC; or Section R317.3 of the 2021, 2018, 2015, 2012, and 2009 IRC, as applicable. The report holder or lumber treater shall be contacted for recommendations on minimum corrosion resistance and connection capacities of fasteners used with the specific proprietary preservative-treated or fire-retardant-treated lumber.

Fasteners used in the construction of exterior decks shall comply with Section R507.2.3 and Table R507.2.3 of the 2021, 2018 IRC.

Fasteners and washers used with the No. 12 gauge AP connectors described in Section 3.1.9 of this report shall be Simpson Strong-Tie SDWS22312DBB or SDWS22512DBB wood screws, inserted through the STN22 Hex Head Washer, recognized in IAPMO UES ER-192. Fasteners used with the No. 14 gauge APA21 shall be SD10112DBB.

The proprietary steel pins used with the CJTZ and HCJTZ connectors are manufactured from carbon steel conforming to SAE J403 specifications, designations 12L14, 1215, 1015, 1018, 1022, 1035, or 10B21. The bolts used with the DJT14 shall conform to ASTM F1554 Grade 36 (minimum) or A307.

SDS and SD wood screw fasteners shall be Simpson Strong-Tie wood screws recognized in ICC-ES ESR-2236 and ICC-ES ESR-3046, respectively. Users shall independently verify the current validity of these evaluation reports.

4.0 DESIGN AND INSTALLATION

4.1 Design: The tabulated connector loads shown in this report are for allowable stress design and include the load duration factor, C_D, corresponding with the applicable loads in accordance with the ANSI/AWC National Design Specification for Wood Construction and its supplement (NDS). Further load duration increases are not permitted other than those shown.

Tabulated allowable loads apply to products connected to wood used where sustained temperatures are 100°F (37.8°C) or less and under dry conditions. The allowable loads in this report shall be adjusted by the temperature factor, C_t, specified in the NDS when connectors are installed in wood that will experience sustained exposure to temperatures exceeding 100°F (37.8°C).

The allowable loads shall be adjusted by the wet service factor, C_M, specified in the NDS for dowel-type fasteners, when products are installed to wood having a moisture content greater than 19 percent (16 percent for engineered wood products), or where wet service is expected.

4.2 Installation:

4.2.1 General: Installation of the connectors shown in this report shall be in accordance with the manufacturer's published installation instructions and this evaluation report. If there is a conflict between this report and the manufacturer's published installation instructions, the more restrictive shall govern.

4.2.2 Deck Construction under the 2021, 2018, 2015, and 2012 IRC: Use of the connectors described in this report for the construction of exterior decks shall be in accordance with Section R507 of the 2021, 2018, 2015, and 2012 IRC. Model numbers ending in Z with a minimum G185 zinc coating are required, except installations given in Note b, Table R507.2.3 of the 2021 and 2018 IRC are prohibited. Nail, screw, and bolt fasteners shall comply with Section 3.2.3 of this report.

5.0 LIMITATIONS

The Simpson Strong-Tie products described in this report are in compliance with, or are acceptable alternatives to what is specified in those codes listed in Section 1.0 of this report subject to the following conditions:

5.1 The connectors shall be manufactured, identified, and installed in accordance with the manufacturer's published installation instructions and this report. A copy of the instructions shall be available at the job site continuously during installation.

5.2 Calculations and details showing compliance with this report shall be submitted to the building official. No further duration of load increase for earthquake or wind loading is allowed except where already shown in the load tables. The calculations and details shall be prepared by a registered design professional where required by the statutes of the jurisdiction in which the project is to be constructed.

5.3 Where applicable, adjustment factors noted in Section 4.1 of this report and the applicable codes shall be considered.

5.4 Fasteners and connected wood members shall be in compliance, respectively, with Sections 3.2.3 and 3.2.2 of this report.

5.5 Use of connectors with fire-retardant-treated or preservative-treated lumber shall be in accordance with Section 3.2.1 of this report. Use of fasteners with fire-retardant-treated or preservative-treated lumber shall be in accordance with Section 3.2.3 of this report.

6.0 SUBSTANTIATING DATA

6.1 Data in accordance with IAPMO UES Evaluation Criteria for Joist Hangers and Miscellaneous Connectors (EC 002-2021), inclusive of tests and calculations.

6.2 Test reports are from laboratories in compliance with ISO/IEC 17025.

7.0 IDENTIFICATION

The products described in this report are identified with a die-stamped label indicating the name of the manufacturer (Simpson Strong-Tie), the model number, and the number of the index evaluation report (ER-102), which identifies products recognized in this report. The SD9, SD10, and SDS

wood screws are identified as described in evaluation reports ICC-ES ESR-3046 and ESR-2236, respectively. Users shall independently verify the current validity of these evaluation reports. The IAPMO UES Mark of Conformity may also be used as shown below.

IAPMO UES ER-280

For additional information about this evaluation report please visit www.uniform-es.org or email us at info@uniform-es.org

TABLE 1—ALLOWABLE LOADS FOR THE RTC SERIES RIGID TIE CONNECTORS

MODEL NO.	NOMINAL POST SIZE[3]	NOMINAL JOIST SIZE[3]	FASTENERS[4,5] (Quantity-Type)		ALLOWABLE DOWNLOAD[1,2] (lbf)	
			Post	Joist (Total)	C_D=1.00	C_D=1.25
RTC22Z	2" x 4"	2x	5 – SD9 x 1 ½"	6 – SD9 x 1 ½"	775	775
RTC42	4" x 4"	2x	14 – SD10 x 1 ½"	8 – SD10 x 1 ½"	2,420	3,030
RTC44	4" x 4"	4x	14 – SD10 x 1 ½"	15 – SD10 x 1 ½"	2,420	3,030
RTC2Z	2" x 4"	2x	6 – SD9 x 1 ½"	6 – SD9 x 1 ½"	1,025	1,260
APRTC2	2" x 4"	2x	6 – SD10 x 1 ½"	6 – SD10 x 1 ½"	1,025	1,260

For **SI:** 1 inch = 25.4 mm, 1 lbf = 4.45 N.

1. Tabulated allowable load capacities shall be selected based on the duration of load, C_D, as permitted by IBC or IRC.
2. Allowable loads shall be equally distributed to both joists.
3. Loads are for Douglas Fir Larch lumber only.
4. NAILS: 16d = 0.162-inch-dia. x 3 ½ inches long, 16d Sinker = 0.148-inch-dia. x 3 ¼ inches long, 10dx1 ½ = 0.148-inch-dia. x 1 ½ inches long.
5. SCREWS: SD9x1.5 = 0.131-inch-dia. x 1 ½ inches long have the model designation SD#9x1 ½ or SD9112. SD10x1.5 = 0.161-inch-dia. x 1 ½ inches long have the model designation SD#10x1 ½ or SD10112. ICC-ES ESR-3046 has more details. Users shall independently verify the current validity of this evaluation report.

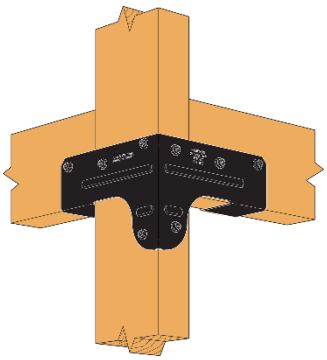

APRTC2

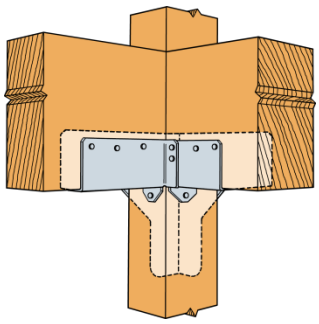

Typical RTC Installation

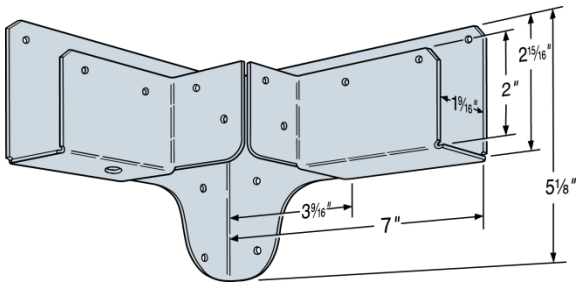

RTC42, (RTC22Z, RTC2Z and RTC44 models similar)

FIGURE 1—RTC RIGID TIE CONNECTORS

TABLE 2—ALLOWABLE LOADS FOR THE LSCZ ADJUSTABLE STRINGER CONNECTOR [5]

MODEL NO.	RIM JOIST INSTALLATION	FASTENER SCHEDULE[4] (Quantity – Type)			ALLOWABLE LOADS (lbf)[3,6]	
		Rim Joist (in)	Stringer Wide Face (in)	Stringer Narrow Face (in)	C_D = 1.0	C_D = 1.15
LSCZ	Supported[1]	8 – 10d x 1 1/2	8 – 10d x 1 1/2	1 – 10d x 1 1/2	945	960
	Cantilever[2]	8 – 10d x 1 1/2	8 – 10d x 1 1/2	1 – 10d x 1 1/2	460	460

For SI: 1 inch = 25.4 mm, 1 lbf = 4.45 N.
1. Supported installations require rim joist bearing support within 12 inches of LSCZ.
2. A maximum rim joist cantilever length of 12 inches measured from the face of the bearing support to the end of the rim joist is permitted for cantilever installation.
3. When cross-grain tension forces cannot be avoided in the members, mechanical reinforcement to resist such forces shall be considered.
4. A minimum distance of ¾ inch measured from the lowest rim joist fastener to the edge of the rim joist is required.
5. A minimum distance of 3½ inches measured from the LSCZ adjustable stringer connector tabs to the end of the rim joist is required.
6. The LSCZ has not been evaluated for torsional resistance.

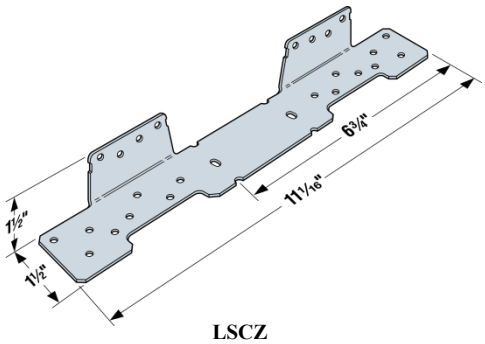

LSCZ

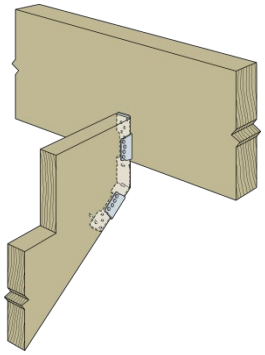

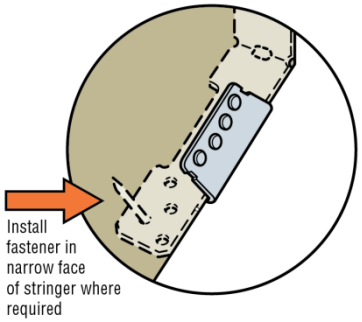

Typical LSCZ Installation

FIGURE 2—LSCZ ADJUSTABLE STRINGER CONNECTOR

TABLE 3—ALLOWABLE LOADS FOR THE DJT DECK JOIST TIE CONNECTOR

MODEL NO.	FASTENERS (Quantity–Type)		ALLOWABLE DOWNLOAD[1,2] (lbf)					
			Nails			Bolts		
	Common Nails	Bolts[3]	C_D=1.00	C_D=1.15	C_D=1.25	C_D=1.00	C_D=1.15	C_D=1.25
DJT14	8 – 16d	2 – ⅝" Ø MB	1,160	1,320	1,325	1,325		

For **SI:** 1 inch = 25.4 mm, 1 lbf = 4.45 N.
1. Tabulated allowable load capacities shall be selected based on the duration of load, C_D, as permitted by the IBC or IRC.
2. Loads are for one connector installed with nails or bolts, but not both. Allowable loads given for installations with nails and bolts are not cumulative.
3. Machine bolts (MB) shall comply with ANSI/ASME Standard B18.2.1 and either ASTM A36 or A307.

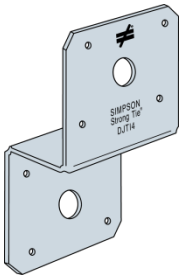

DJT14

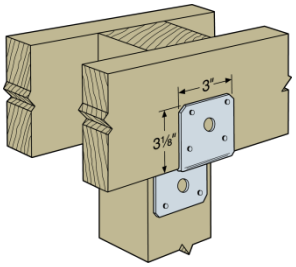

Typical DJT14 Installation

FIGURE 3-DJT DECK JOIST TIE CONNECTOR

TABLE 4—ALLOWABLE LOADS FOR THE CJTZ AND HCJTZ CONCEALED JOIST TIE CONNECTORS

MODEL NO.	MIN. JOIST SIZE	DIMENSIONS		FASTENERS (Quantity–Type)		ALLOWABLE LOADS[1] (lbf)			
		H_1	H_2	Post[2] (SDS)	Joist[3] (Pins)	UPLIFT[4]	DOWNLOAD		
						C_D=1.60	C_D=1.00	C_D=1.15	C_D=1.25
DOUGLAS FIR–LARCH									
CJT3Z	4 × 8	5 9/16"	4 7/16"	6 – SDS¼ × 3"	3 – ½" × 2 ¾"	1,540	1,730	1,730	1,730
					3 – ½" × 4 ¾"	1,540	1,730	1,730	1,730
CJT4Z	4 × 10	7	5 15/16"	8 – SDS¼ × 3"	4 – ½" × 2 ¾"	2,625	2,970	2,970	2,970
					4 – ½" × 4 ¾"	2,625	2,970	2,970	2,970
CJT5Z	4 × 12	8 9/16"	7 7/16"	10 – SDS¼ × 3"	5 – ½" × 2 ¾"	3,160	3,935	4,520	4,580
					5 – ½" × 4 ¾"	3,160	4,200	4,580	4,580
CJT6Z	4 × 12	10	8 15/16"	12 – SDS¼ × 3"	6 – ½" × 2 ¾"	4,305	4,220	4,220	4,220
					6 – ½" × 4 ¾"	4,305	4,220	4,220	4,220
HCJTZ	6 × 16	13 1/16"	13 1/16"	22 – SDS¼ × 3"	7 – ¾" × 4 ¾"	9,210	8,465	8,465	8,465
GLULAM[5]									
CJT3Z	3⅛ × 7½	5 9/16"	4 7/16"	6 – SDS¼ × 3"	3 – ½" × 2 ¾"	1,540	1,835	1,835	1,835
					3 – ½" × 4 ¾"	1,540	1,835	1,835	1,835
CJT4Z	3⅛ × 9	7"	5 15/16"	8 – SDS¼ × 3"	4 – ½" × 2 ¾"	2,625	3,180	3,180	3,180
					4 – ½" × 4 ¾"	2,625	3,180	3,180	3,180
CJT5Z	3⅛ × 10½	8 9/16"	7 7/16"	10 – SDS¼ × 3"	5 – ½" × 2 ¾"	3,160	3,900	4,480	4,570
					5 – ½" × 4 ¾"	3,160	4,200	4,570	4,570
CJT6Z	3⅛ × 12	10"	8 15/16"	12 – SDS¼ × 3"	6 – ½" × 2 ¾"	4,305	4,510	4,860	4,860
					6 – ½" × 4 ¾"	4,305	4,860	4,860	4,860
HCJTZ	5 1/8 × 15	13 1/16"	13 1/16"	22 – SDS¼ × 3"	7 – ¾" × 4 ¾"	9,210	8,465	8,465	8,465
PSL[5]									
CJT3Z	3½ × 9½	5 9/16"	4 7/16"	6 – SDS¼ × 3"	3 – ½" × 2 ¾"	1,540	2,220	2,220	2,220
					3 – ½" × 4 ¾"	1,540	2,220	2,220	2,220
CJT4Z	3½ × 9½	7"	5 15/16"	8 – SDS¼ × 3"	4 – ½" × 2 ¾"	2,625	2,810	2,810	2,810
					4 – ½" × 4 ¾"	2,625	2,810	2,810	2,810
CJT5Z	3½ × 9½	8 9/16"	7 7/16"	10 – SDS¼ × 3"	5 – ½" × 2 ¾"	3,160	3,980	4,285	4,285
					5 – ½" × 4 ¾"	3,160	4,200	4,285	4,285
CJT6Z	3½ × 11⅞	10"	8 15/16"	12 – SDS¼ × 3"	6 – ½" × 2 ¾"	4,305	4,640	4,640	4,640
					6 – ½" × 4 ¾"	4,305	4,640	4,640	4,640
HCJTZ	5 1/8 × 15	13 1/16"	13 1/16"	22 – SDS¼ × 3"	7 – ¾" × 4 ¾"	9,210	8,465	8,465	8,465

For **SI:** 1 inch = 25.4 mm, 1 lbf = 4.45 N.

1. Tabulated allowable load capacities shall be selected based on the duration of load, C_D, as permitted by the applicable building code.
2. SDS wood screws have the model designation SDS¼ x 3 or SDS25300. Additional details are in evaluation report ICC–ES ESR–2236. Users shall independently verify the current validity of this evaluation report.
3. The quantity and length of the pins are specified in the Table. The Pins are supplied by Simpson Strong-Tie Company as a component of the CJT series hanger.
4. The uplift loads have been increased for wind or earthquake loading (C_D = 1.60) with no further increase allowed. The allowable load shall be reduced when other load durations govern.
5. Glulam is glued-laminated timber. PSL is Parallel Strand Lumber. Additional details are described in Section 3.2.2 of this report.

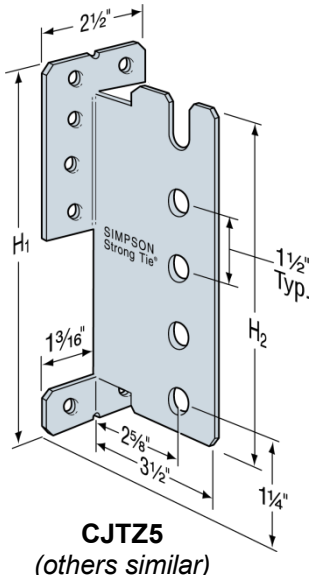

CJTZ5
(others similar)

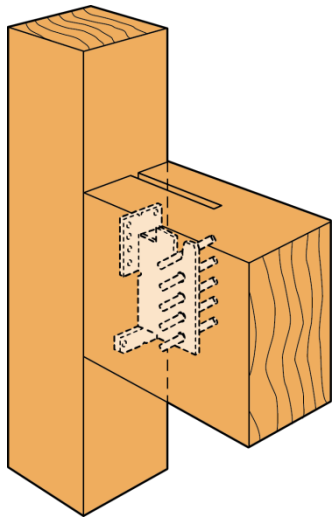

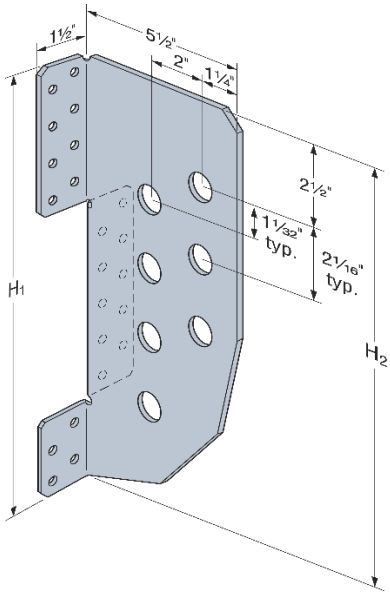

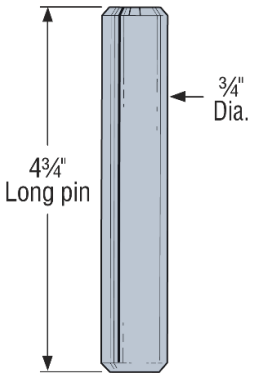

HCJTZ

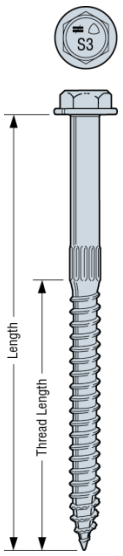

SDS¼ × 3"
U.S. Patent 6,109,850; 5,897,280; 7,101,133; 7,832,173

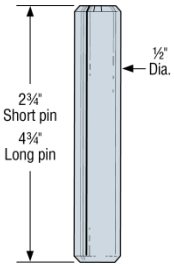

Chamfered Steel Pins

FIGURE 4—CJTZ AND HCJTZ CONCEALED JOIST TIE CONNECTOR COMPONENTS

TABLE 5—DS DRYWALL STOP[1,2]

MODEL NO.	FASTENERS (Quantity–Type)		MAXIMUM O.C. SPACING (inches)
	Wood Framing	Steel Stud Framing[3]	
DS	1–8d Common Nail	1–No. 6 Self–drilling Tapping Screw[4]	16

For **SI:** 1 inch = 25.4 mm, 1 lbf = 4.45 N.
1. Use of the DS Drywall Stops is limited to nonfire–resistance–rated construction and to nonstructural applications.
2. Use of the DS drywall stops shall not replace the required gypsum fasteners specified in 2021,2018 and 2015 IRC Section R702.3.5.1 or 2012 IRC Section R702.3.6 in designated braced wall panels conforming to Section R602.10.1 of the 2021,2018, 2015, and 2012 IRC, or Section R602.10.1.1 of the 2009 IRC.
3. Steel studs shall have a minimum thickness of 30 mils (0.0296–inch base metal thickness).
4. Self–drilling tapping screws shall comply with ASTM C1513 and SAE J78, and when required by code, shall have a Type II coating in accordance with ASTM B633.

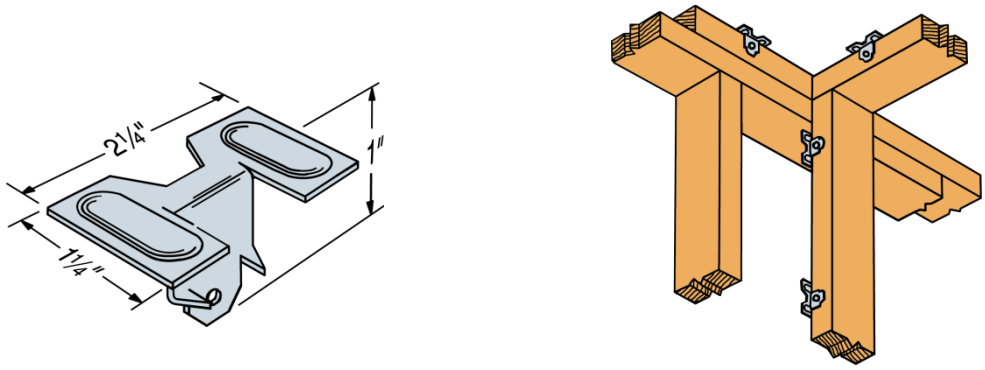

FIGURE 5—DS DRYWALL STOP

TABLE 6 – TRUSS CLIPS

MODEL NO.	DIMENSIONS	FASTENERS		ALLOWABLE LOADS[1] (lbf) (C_D=1.60)							
	Top Plate	Base	Slot	Without Gap[2]		With max. 1/4" Gap		1/4" < Gap < 1/2"		With max. 1 1/4" Gap[3]	
				F_1	F_2	F_1	F_2	F_1	F_2	F_1	F_2
STC	2X4 & 2X6 Plate	2-8d	1-8d	70	55	35	30	25	40	-	-
STCT	2X4 & 2X6 Plate	2-8d	1-8d	70	55	35	30	25	40	-	-
DTC	2X4 & 2X6 Plate	4-8d	2-8d	125	200	80	125	55	70	-	-
HTC4	2X4 Plate	6-10d	3-10d	370	310	-	-	-	-	85	255
	2X6 Plate	6-10d	3-10d	410	265	-	-	-	-	155	250

For **SI:** 1 inch = 25.4 mm, 1 lbf = 4.45 N.

1. Allowable Loads shall not be increased for short-term loading
2. The truss or rafter shall be bearing on the top plate to achieve the allowable loads under "WITHOUT GAP"
3. When installed with the maximum 1¼ inch space between the rafter or truss and top plate, allowable loads under "WITH 1¼" GAP" are permitted. Where loads are not required the space is not limited to 1¼ inch maximum.
4. Clips are required on both sides of the truss to achieve F1 loads in both directions (clips shall be staggered to avoid nail interferences).
5. Nails: 10d = 0.148-inch-diameter by 3 inches long, 8d = 0.131-inch-diameter by 2 ½ inches long.

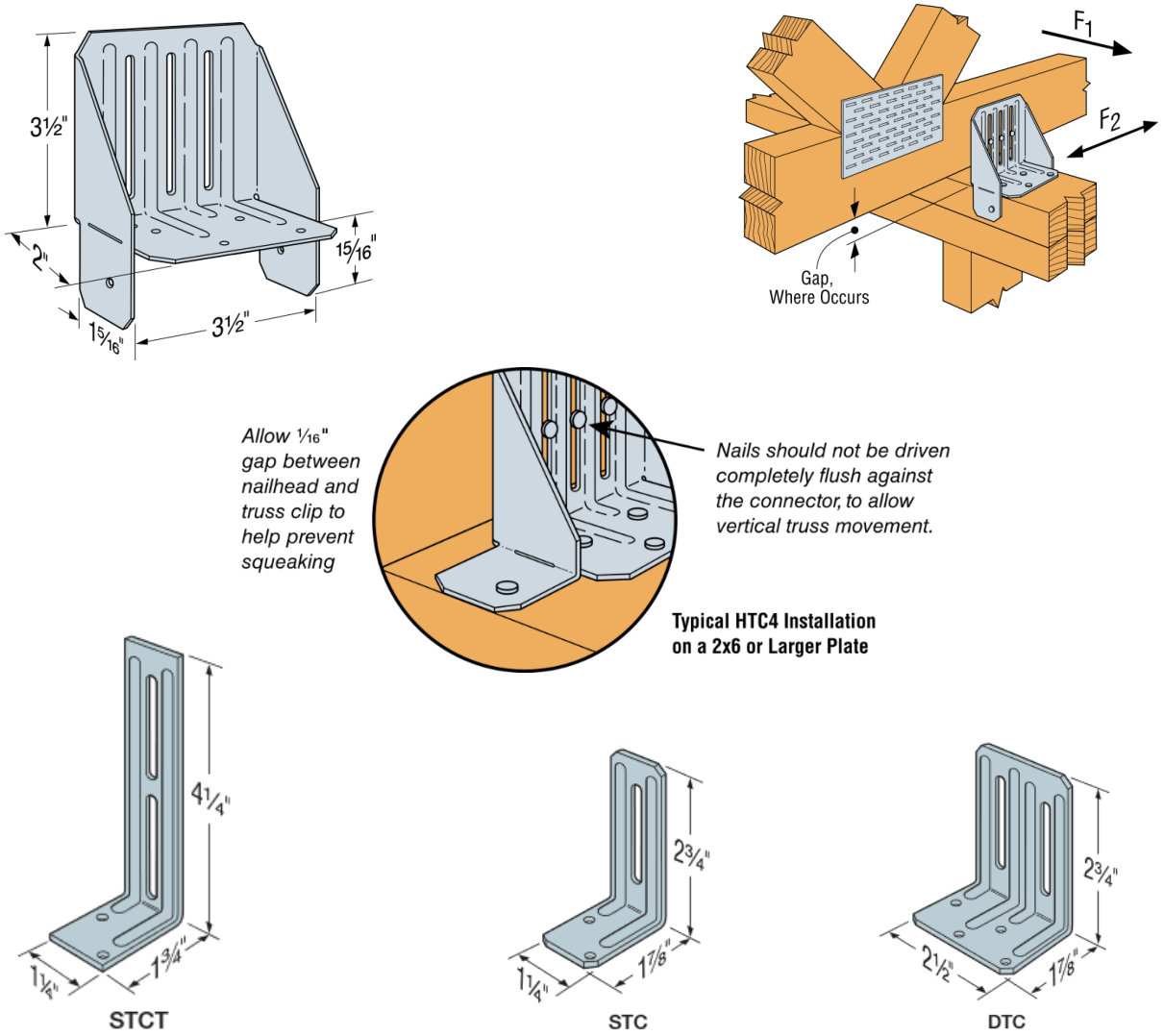

FIGURE 6— TRUSS CLIP CONNECTORS

TABLE 7 – ALLOWABLE LOADS FOR THE KBS1Z KNEE-BRACE STABILIZER

MODEL NO.	DIMENSIONS		TYPE OF CONNECTION	CONNECTORS PER JOINT	FASTENERS EACH CONNECTOR	DIRECTION OF LOAD[3]	ALLOWABLE LOADS[2] (lbf) (C_D=1.60)
	W	L					
KBS1Z	1½"	3"	1	2	12 - 8d	F1 Brace angle = 45°	1,175
						F1 Brace angle = 30° or 60°	835
			2	1	12 - 8d x 1½"	F1 Brace angle = 45°	630
						F1 Brace angle = 30° or 60°	510
			3	4	12 - 8d	Uplift	1,160
						Lateral	1,725
			4	2	12 - 8d	Uplift	540
						Lateral	485
				4		Uplift	900
						Lateral	1,270

For **SI**: 1 inch = 25.4 mm, 1 lbf = 4.45 N.

1. SD9x1½ screws may be substituted for the specified fasteners with no load reduction. SD9x1½ = 0.131 inch dia x 1½ inches long have the model designation SD#9x1½ or SD9112. ICC-ES ESR-3046 has more detail. Users shall independently verify the current validity of this evaluation report.
2. Allowable loads have been increased for wind or earthquake loading (C_D = 1.60) with no further increases allowed. The uplift loads shall be reduced using the appropriate value of C_D where other loads govern.
3. For braces installed at intermediate angles, allowable loads may be interpolated between loads listed for brace angle = 45° and brace angle = 30° or 60°.

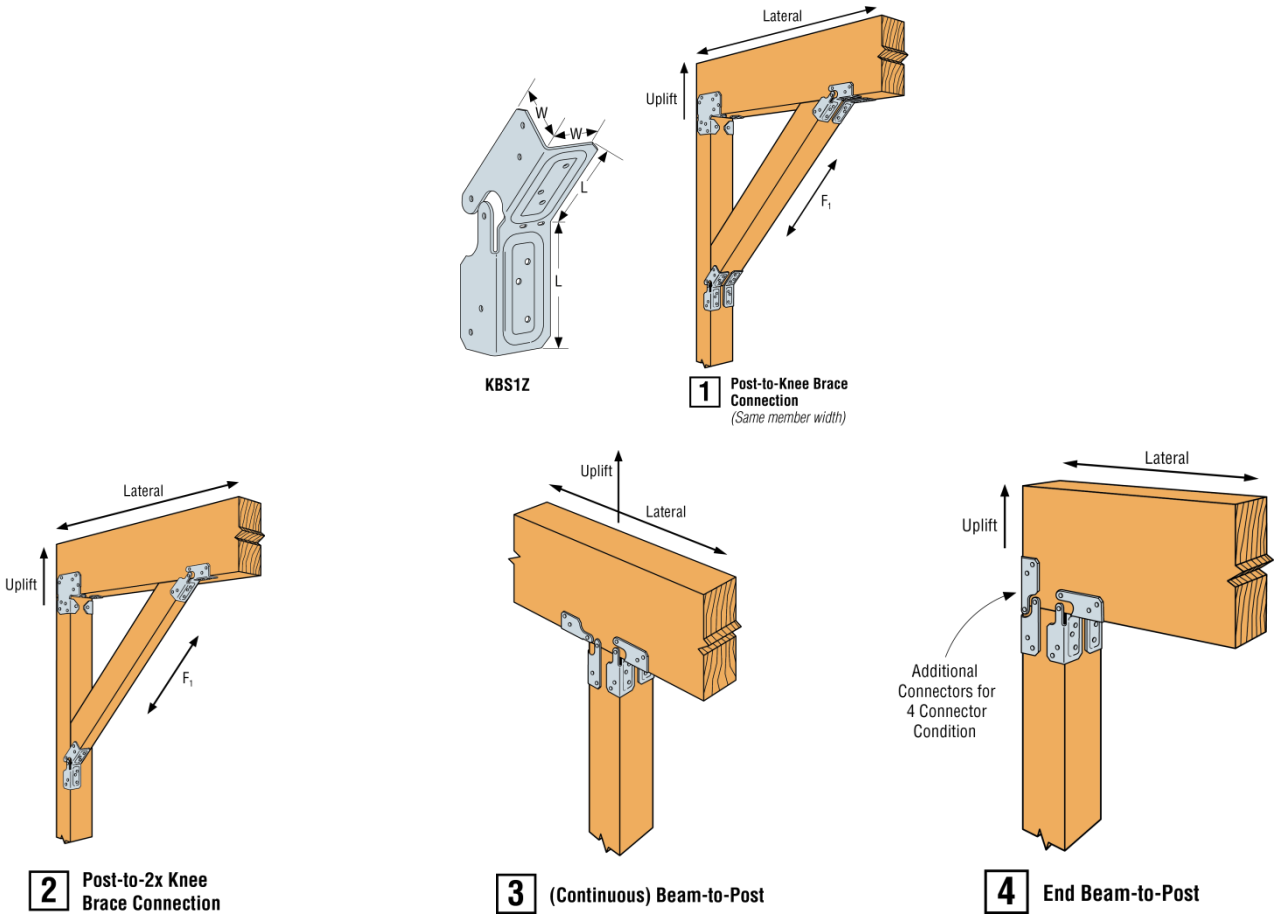

FIGURE 7 – KBS1Z KNEE-BRACE STABILIZER

TABLE 8—ALLOWABLE LOADS FOR THE CBTZ CONCEALED BEAM TIE CONNECTOR

MODEL NO.	POST (Min.)	BEAM (Min.)	DIMENSIONS		FASTENERS			ALLOWABLE LOADS[1] (lbf)					
					Quantity			Continuous Beam			End of Beam		
			Dia. (in.)	H (in.)	Post	Beam	Type[4,5]	Uplift	Lateral[2]	Down[3]	Uplift	Lateral[2]	Down[3]
								C_D=1.60	C_D=1.60		C_D=1.60	C_D=1.60	
CBT2Z	4x4	4x6	1 ¼	10	2	2	½" x 3 ¼" dowel ½" MB	2,020	750	6,890	1,585	550	6,890
CBT4Z	6x6	6x8	1 ¼	14	3	3	½" x 4 ¾" dowel ½" MB	4,215	1,655	18,140	3,695	1,055	18,140

For **SI:** 1 inch = 25.4 mm, 1 lbf = 4.45 N.

1. Allowable uplift and lateral loads have been increased for wind or earthquake with no further increase allowed. The uplift loads shall be reduced using the appropriate value of C_D where other loads govern...
2. The lateral load is in the direction parallel to the beam.
3. Downloads are based on a wood-bearing area calculation, Fc_{perp} = 625 psi.
4. ½ inch diameter dowel pins are supplied with the CBTZ series connectors. As an alternative, ½ inch diameter hex or square head machine bolts may be used for loads listed.
5. Lag or carriage bolts are not permitted.
6. Structural composite lumber columns have sides that show either the wide face or the edges of the lumber strands/veneers. Values in the tables reflect dowel or bolt installation into the wide face.
7. The spliced condition shall be detailed by the structural designer.

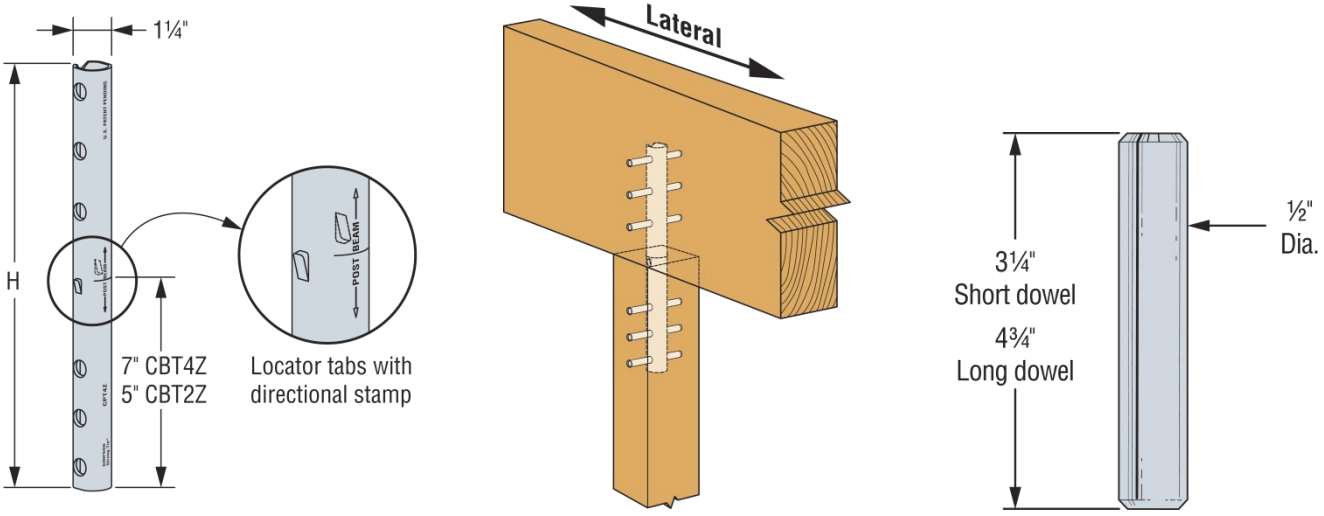

CBT4Z
(CBT2Z similar)

Chamfered Steel Pin

FIGURE 8—CBTZ CONCEALED BEAM TIE CONNECTOR COMPONENTS

TABLE 9A— APL and APT BEAM-TO-COLUMN TIES[1,2,3]

MODEL NO.	Ga	DIMENSIONS			FASTENER QTY.		ALLOWABLE LOADS (lbf)	
		W (in.)	L (in.)	H (in.)	Column	Beam	Uplift	F1
APL4/APVL4	12	3	8 ¼	8 ¼	2	4	1,155	670
APL6/APVL6	12	5	11¼ (10 ½)	11 ¼ (10 ½)	4	6	1,905	1,340
APT4/APVT4	12	3	13 1/2	8 ¼	2	4	1,330	1,015
APT6/APVT6	12	5	17 1/2 (16)	11 ¼ (10 ½)	4	8	2,130	1,425

For **SI:** 1 inch = 25.4 mm, 1 lbf = 4.45 N.
1. Allowable loads have been increased for wind or seismic loads with no further increase allowed.
2. Connectors shall be installed in pairs. Allowable loads do not apply to single parts.
3. All fasteners are Simpson Strong-Tie SDWS22312DBB inserted through STN22.
4. Dimensions in parentheses are for the models with "V" in the name.

TABLE 9B— APA HEAVY ANGLES[1,2,3]

MODEL NO.	Ga	DIMENSIONS			FASTENER QTY.		ALLOWABLE LOADS (lbf)	
		L (in.)	W1 (in.)	W2 (in.)	Column	Beam	Uplift	F1
APA4/APVA4	12	3	3 ¼	3	2	2	710	1,220
APA6/APVA6	12	5	3 ¾ (3 ¼)	3 1/2 (3)	4	4	1,350	1,985

For **SI:** 1 inch = 25.4 mm, 1 lbf = 4.45 N.
1. Allowable loads have been increased for wind or seismic loads with no further increase allowed.
2. Connectors shall be installed in pairs. Allowable loads do not apply to single parts.
3. All fasteners are Simpson Strong-Tie SDWS22312DBB inserted through STN22.
4. Dimensions in parentheses are for the models with "V" in the name.

TABLE 9C— APA21 LIGHT RAFTER TIE[1,2,3]

MODEL NO.	Ga	DIMENSIONS			FASTENER QTY.		ALLOWABLE LOADS (lbf)	
		L (in)	W1 (in)	W2 (in)	Rafter	Beam	Uplift	F1
APA21/APVA21	14	1 3/8	2	1 1/2	1	1	200	120

For **SI:** 1 inch = 25.4 mm, 1 lbf = 4.45 N.
1. Allowable loads have been increased for wind or seismic loads with no further increase allowed.
2. Allowable loads are for a single part.
3. All fasteners are Simpson Strong-Tie SD10112DBB.

TABLE 9D— APB POST BASES[1,2,3,4,5,6]

MODEL NO.	Ga	DIMENSIONS			FASTENER QTY.		ALLOWABLE LOADS (lbf)	
		L (in)	W (in)	H(in)	Post Qty.	Anchor Dia.	Uplift	Down
APB44/APVB44	12	3	3 9/16	7 (6 ¾)	4	5/8	1,035	6,725
APB3.75	12	3	3 ¾	6 29/32	4	5/8	1,035	6,725
APB44R/APVB44R	12	3	4 1/16	6 ¾ (6 ½)	4	5/8	1,035	6,725
APB66/APVB66	12	5	5 1/2	7 1/2 (6 13/16)	4	5/8	1,260	11,450
APB66R/APVB66R	12	5	6	7 ¼ (6 9/16)	4	5/8	1,260	11,450
APB88/APVB88	12	7	7 1/2	10 9/16 (9 7/8)	8	(2) 5/8	2,670	22,255
APB88R/APVB88R	12	7	8	10 5/16 (9 5/8)	8	(2) 5/8	2,670	22,255
APB1010/APVB1010	12	9	9 1/2	11 (9 ¾)	8	(2) 5/8	2,365	23,725
APB1010R/APVB1010R	12	9	10	10 3/4 (9 ½)	8	(2) 5/8	2,365	23,725

For **SI:** 1 inch = 25.4 mm, 1 lbf = 4.45 N.
Footnotes continued on the next page:
1. Uplift loads have been increased for wind or seismic with no further increase allowed. The uplift loads shall be reduced using the appropriate value of CD where other loads govern.
2. Downloads may not be increased for short-term loading.
3. Specifier to design concrete for uplift capacity.
4. Downloads shall be reduced where limited by the capacity of the post.

5. Post fasteners are a Simpson Strong-Tie SDWS22312DBB inserted through an STN22 nut.
6. Post bases do not provide adequate resistance to prevent members from rotating about the base and therefore are not recommended for non-top-supported installations (such as fences or unbraced carports).
7. Dimensions in parentheses are for the models with "V" in the name.

TABLE 9E— APDJT DECK JOIST TIE[1,2,3]

MODEL NO.	Ga	DIMENSIONS			FASTENERS (Qty) and Length		ALLOWABLE LOADS (lbs)	
		S (in)	W (in)	H(in)	Column	Joist	Floor (100)	Roof (125)
APDJT2-4/APVDJT2-4	12	1½	3	10	(2) 3 ½"	(2) 5 ½"	1870	2340
APDJT2R-4/APVDJT2R-4	12	2	3	9 1/2	(2) 3 ½"	(2) 5 ½"	1870	2340
APDJT2-6/APVDJT2-6	12	1½	5	10 (8 ½)	(2) 3 ½"	(2) 5 ½"	1870	2340
APDJT2R-6/APVDJT2R-6	12	2	5	9 ½ (8)	(2) 3 ½"	(2) 5 ½"	1870	2340
APDJT1.75-4/APVDJT1.75-4	12	1 ¾	3	9 ¾	(2) 3 ½"	(2) 5 ½"	1430 [5]	1790 [5]
APDJT1.75-6/APVDJT1.75-6	12	1 ¾	3	9 ¾ (8 ¼)	(2) 3 ½	(2) 5 ½"	1430 [5]	1790 [5]

For **SI:** 1 inch = 25.4 mm, 1 lbf = 4.45 N.
1. Roof loads are 125 percent of floor loads. Floor loads may be adjusted for other load durations according to the code, provided they do not exceed the roof loads.
2. Loads are per part.
3. The joist fastener is a Simpson Strong-Tie SDWS22512DBB inserted through an STN22 hex-head washer. The post fastener is a Simpson Strong-Tie SDWS22312DBB inserted through an STN22 hex-head washer.
4. Dimensions in parentheses are for the models with "V" in the name.
5. Allowable loads for the 1.75 models are based on Western Red Cedar, with 425 psi bearing perpendicular to grain and 0.36 specific gravity.

TABLE 9F— APLH LIGHT HANGER

JOIST SIZE	MODEL NO.	Ga.	DIMENSIONS (in.)			FASTENERS (SD10112DBB)		ALLOWABLE LOADS (lbf)			
			W	H	B	Header Qty.	Joist Qty.	Uplift (160)	Floor (100)	Snow (115)	Roof (125)
2 × 4	APLH24	14	1 9/16	3 5/16	1 7/8	4	2	315	690	795	865
	APLH24R		2 1/16	3 1/16							
2 × 6 or 2 × 8	APLH26	14	1 9/16	5 1/8	1 7/8	6	4	900	1040	1195	1300
	APLH1.75-6		1 13/16	5							
	APLH26R		2 1/16	4 7/8							
2 × 10 or 2 × 12	APLH210	14	1 9/16	8	1 7/8	10	6	1345	1730	1990	2165
	APLH1.75-10		1 13/16	7 7/8							
	APLH210R		2 1/16	7 3/4							

For **SI:** 1 inch = 25.4 mm, 1 lbf = 4.45 N.
1. Allowable uplift loads have been increased by 60 percent for wind or wind or earthquake loading with no further increase allowed. The uplift loads shall be reduced using the appropriate value of C_D where other loads govern.
2. All fasteners are Simpson Strong-Tie SD10112DBB.

TABLE 9G— APHH HEAVY HANGER

JOIST SIZE	MODEL NO.	Ga.	DIMENSIONS (in.)			FASTENERS		DF/SP ALLOWABLE LOADS (lbf)			
			W	H	B	SDS25300 Header Qty.	SDWS22312 w/STN22 Joist Qty.	Uplift (160)	Floor (100)	Snow (115)	Roof (125)
4 × 6 or 4 × 8	APHH46	12	3 9/16	5 1/8	3	6	2	1165	2280	2280	2280
	APHH46R		4 1/16	4 7/8							
6 × 10 or 6 × 12	APHH610		5 ½	8 ½	3	14	6	4140	5880	6760	7350
	APHH610R		6	8 ¼							

For **SI:** 1 inch = 25.4 mm, 1 lbf = 4.45 N.
1. Allowable uplift loads have been increased by 60 percent for wind or wind or earthquake loading with no further increase allowed. The uplift loads shall be reduced using the appropriate value of CD where other loads govern.
2. All fasteners are Simpson Strong-Tie SDS25300 to the header and SDWS22312 with STN22 to the joist.

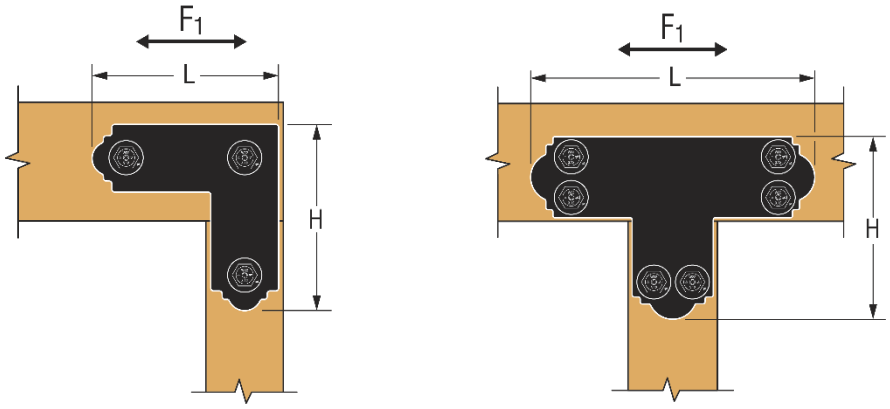

FIGURE 9A — APL AND APT DECORATIVE BEAM-TO-COLUMN TIES

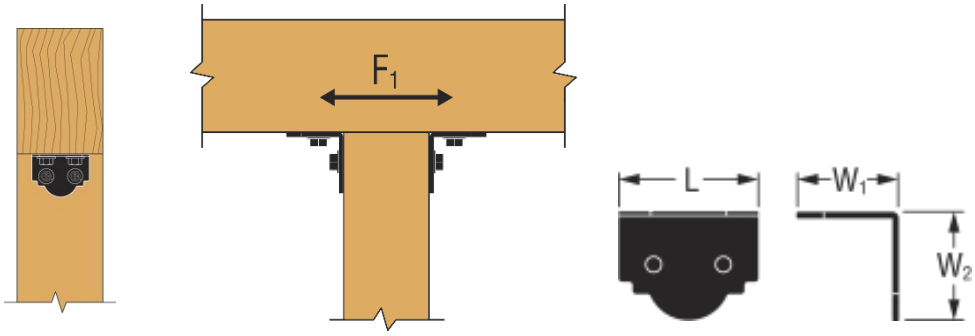

FIGURE 9B — APA DECORATIVE HEAVY ANGLES

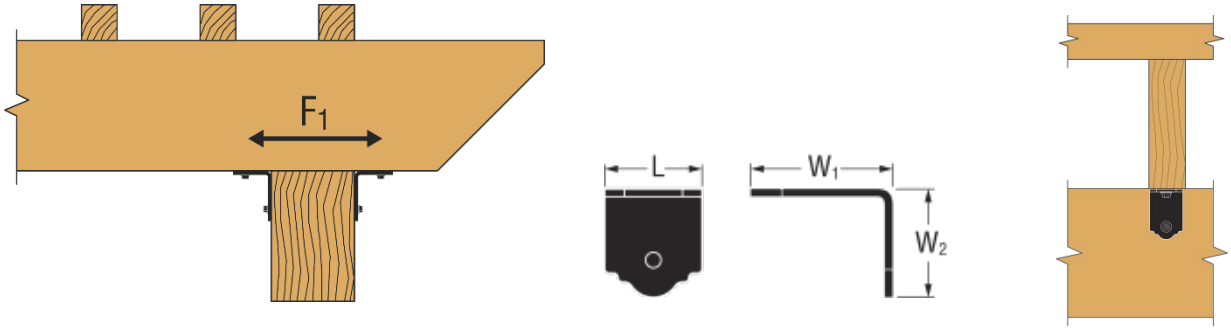

FIGURE 9C — APA21 DECORATIVE LIGHT RAFTER TIE

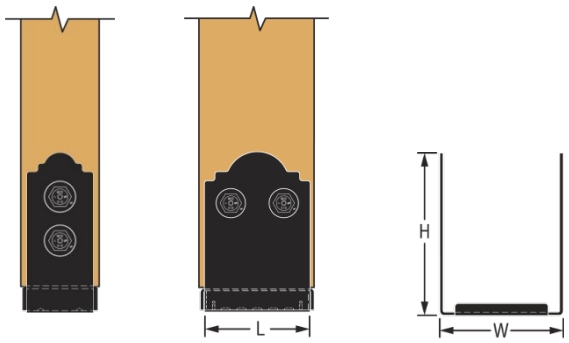

FIGURE 9D — APB DECORATIVE POST BASES

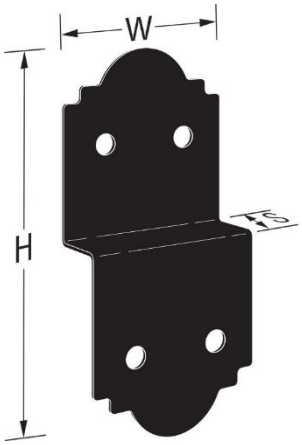

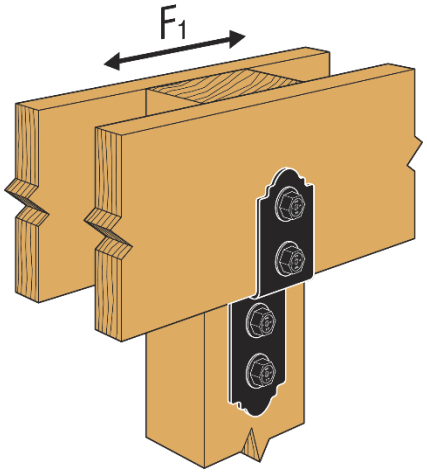

Typical APDJT2-4 Installation

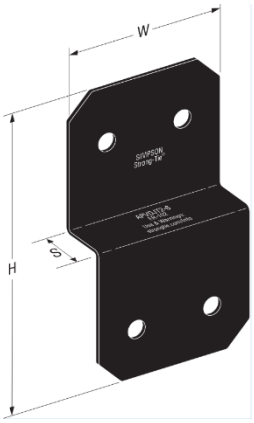

Typical APVDJT Avant style connector. Other Avant connectors are similar.

FIGURE 9E — APDJT DECK JOIST TIE

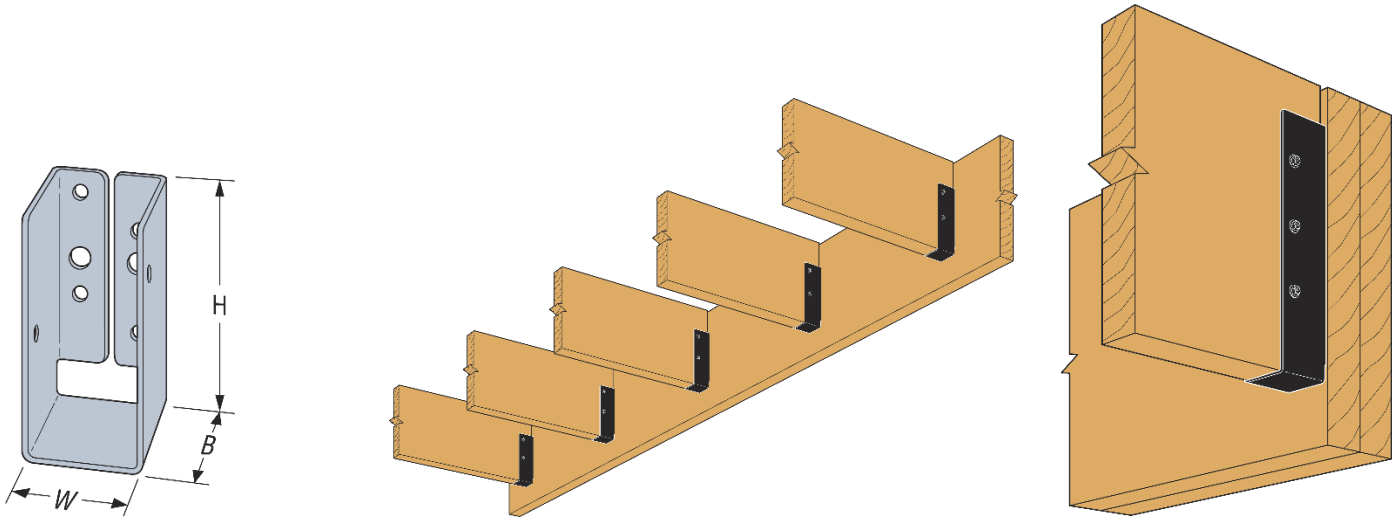

APLH24
(Other sizes similar)

FIGURE 9F — APLH LIGHT HANGER

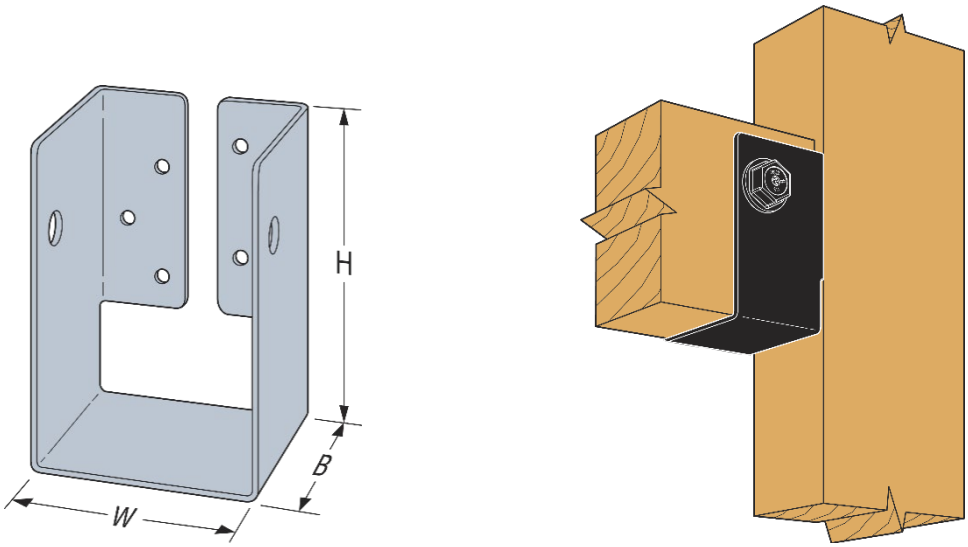

APHH46
(Other sizes similar)

FIGURE 9G — APHH HEAVY HANGER

TABLE 10—ALLOWABLE LOADS FOR THE LSSJ FIELD ADJUSTABLE JACK HANGER

MODEL NO.	DIMENSIONS[1]		FASTENERS[7] (Quantity-Type)		ALLOWABLE LOADS[2,4] (lbf)			
					UPLIFT[3]	DOWNLOAD		
	W	H	Face	Joist[5]	C_D=1.60	C_D=1.00	C_D=1.15	C_D=1.25
0° - 20° Skew								
LSSJ26LZ LSSJ26RZ	1 9/16	4 3/8	4-10d	4-10d	295	365	365	365
			4-10dx1½	4-10dx1½				
LSSJ28LZ LSSJ28RZ	1 9/16	6	5-10d	5-10d	450	590	605	605
			5-10dx1½	5-10dx1½				
LSSJ210LZ LSSJ210RZ	1 9/16	8	6-10d	6-10d	795	710	810	815
			6-10dx1½	6-10dx1½				
21° - 45° Skew								
LSSJ26LZ LSSJ26RZ	1 9/16	4 3/8	4-10d	4-10d	750	750	750	750
			4-10dx1½	4-10dx1½	295	420	420	420
LSSJ28LZ LSSJ28RZ	1 9/16	6	5-10d	5-10d	1165	1080	1165	1165
			5-10dx1½	5-10dx1½	450	590	675	725
LSSJ210LZ LSSJ210RZ	1 9/16	8	6-10d	6-10d	1420	1295	1445	1445
			6-10dx1½	6-10dx1½	795	710	810	815

For **SI**: 1 inch = 25.4 mm, 1 lbs = 4.45N

1. Refer to Figure 10 of this report for definitions of hanger nomenclature (W, H).
2. Tabulated allowable load capacities shall be selected based on the duration of load, C_D, as permitted by the applicable building code.
3. The uplift loads have been increased for wind or earthquake loading (C_D = 1.60) with no further increases allowed. Reduced allowable load when other load durations govern.
4. Tabulated Loads apply to a slope range of +45 degrees to -45 degrees.
5. Joist nails shall be driven at a 45-degree angle through the joist into the header/hip (double shear nailing) to achieve the tabulated loads for 10d nails at skews 21-45 degrees.
6. LSSJR/L Series hangers provide a torsional moment resistance, of not less than 75 pounds (334 N) times the depth of the joist at which the lateral movement of the top or bottom of the joist with respect to the vertical position of the joist is 0.125 inch (3.2 mm). The height, H, of the joist hanger shall be at least 60 percent of the height of the joist unless additional lateral restraint is provided and designed by others.
7. Section 3.2.3 of this report lists nail sizes and required minimum physical properties.

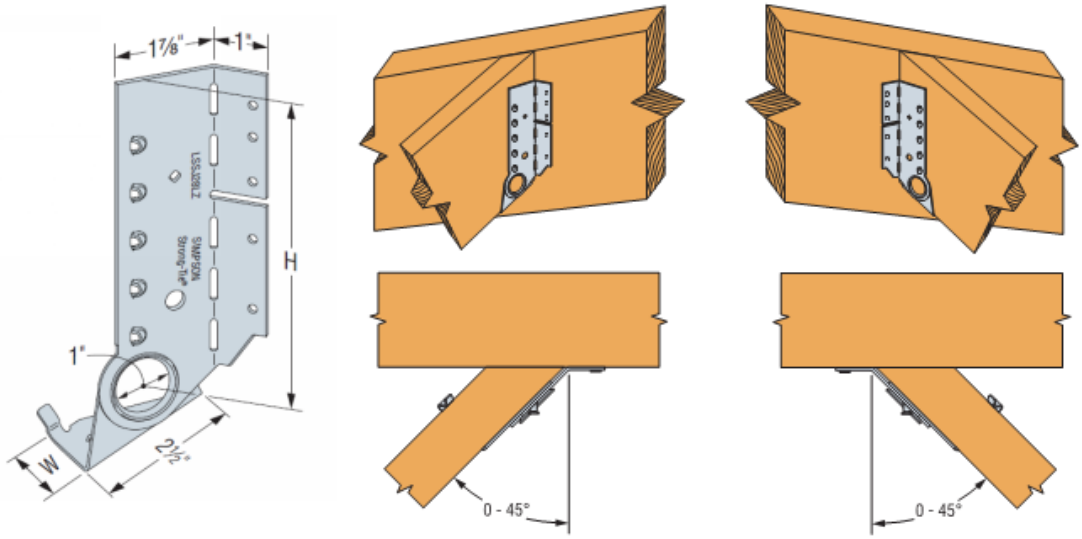

LSSJ28LZ *(others similar)* | **Typical LSSJLZ Installation Bevel Cut Required** | **Typical LSSJRZ Installation Bevel Cut Required**

FIGURE 10—LSSJR/L FIELD ADJUSTABLE JACK HANGER

TABLE 11—ALLOWABLE LOADS FOR THE LSSR FIELD ADJUSTABLE SLOPEABLE/SKEWABLE HANGER

MODEL NO.	ACTUAL JOIST WIDTH (in.)	DIMENSIONS [2]			FASTENERS[7] (Quantity-Type)		ALLOWABLE LOADS [3,4] (lbf)			
							UPLIFT [5]	DOWNLOAD		
		W	H	A	Face	Joist	C_D=1.60	C_D=1.00	C_D=1.15	C_D=1.25
Sloped Only Hangers										
LSSR26	1 ½	1 9/16	5 3/8	2 ½	12-10d x 2 ½	8-10d x 1 ½	460	1065	1065	1065
LSSR28	1 ½	1 9/16	7 1/8	2 ½	14-10d x 2 ½	10-10d x 1 ½	785	1405	1405	1405
LSSR210	1 ½	1 9/16	9 1/8	2 ½	14-10d x 2 1/2	10-10d x 1 ½	785	1405	1405	1405
LSSR1.81	1 ¾	1 13/16	8 15/16	4 1/8	14-10d x 2 1/2	12-10d x 1 1/2	510	1415	1565	1565
LSSR2.1	2 to 2-1/16	2 1/8	8 15/16	4 1/8	14-10d x 2 1/2	12-10d x 1 1/2	510	1415	1565	1565
LSSR2.37	2 5/16	2 3/8	8 15/16	4 1/8	14-10d x 2 1/2	12-10d x 1 1/2	510	1415	1565	1565
LSSR2.56	2 1/2	2 9/16	8 15/16	4 1/8	14-10d x 2 1/2	12-10d x 1 1/2	510	1415	1565	1565
LSSR210-2	3	3 1/8	8 15/16	5 1/8	22-16d x 2 1/2	18-16d x 2 1/2	695	2365[1]	2365[1]	2365[1]
LSSR410	3 1/2	3 9/16	8 15/16	5 1/8	22-16d x 2 1/2	18-16d x 2 1/2	695	2365[1]	2365[1]	2365[1]
Skewed Hangers or Slope and Skewed Hangers										
LSSR26	1 ½	1 9/16	5 3/8	2 ½	11-10d x 2 ½	7-10d x 1 ½	460	760	760	760
LSSR28	1 ½	1 9/16	7 1/8	2 ½	13-10d x 2 ½	8-10d x 1 ½	785	925	925	925
LSSR210	1 ½	1 9/16	9 1/8	2 ½	13-10d x 2 1/2	8-10d x 1 1/2	785	1150	1150	1150
LSSR1.81	1 3/4	1 13/16	8 15/16	4 1/8	13-10d x 2 1/2	9-10d x 1 1/2 [6]	510	1060	1205	1205
LSSR2.1	2 to 2-1/16	2 1/8	8 15/16	4 1/8	13-10d x 2 1/2	9-10d x 1 1/2 [6]	510	1060	1205	1205
LSSR2.37	2 1/3	2 3/8	8 15/16	4 1/8	13-10d x 2 1/2	9-10d x 1 1/2 [6]	510	1060	1205	1205
LSSR2.56	2 1/2	2 9/16	8 15/16	4 1/8	13-10d x 2 1/2	9-10d x 1 1/2 [6]	510	1060	1205	1205
LSSR210-2	3	3 1/8	8 15/16	5 1/8	20-16d x 2 1/2	13-16d x 2 1/2 [6]	695	1810	1810	1810
LSSR410	3 1/2	3 9/16	8 15/16	5 1/8	20-16d x 2 1/2	13-16d x 2 1/2 [6]	695	1810	1810	1810

For **SI**: 1 inch = 25.4 mm, 1 lbs = 4.45N

1. For slope-only installations, the four triangle holes may be filled with tabulated fasteners for an allowable roof download of 3015 lbs. for LSSR No.16-gauge hangers.
2. Figure 11 of this report provides definitions of hanger nomenclature (W, H, A).
3. Tabulated allowable load capacities shall be selected based on the duration of load, C_D, as permitted by the applicable building code.
4. Tabulated Loads apply to slope and skew range +45 degrees to -45 degrees.
5. The uplift loads have been increased for wind or earthquake loading with no further increases allowed. The uplift loads shall be reduced using the appropriate value of C_D where other loads govern.
6. Joist nails may be driven up to a 45-degree angle into the joist at skewed installation to achieve the tabulated loads.

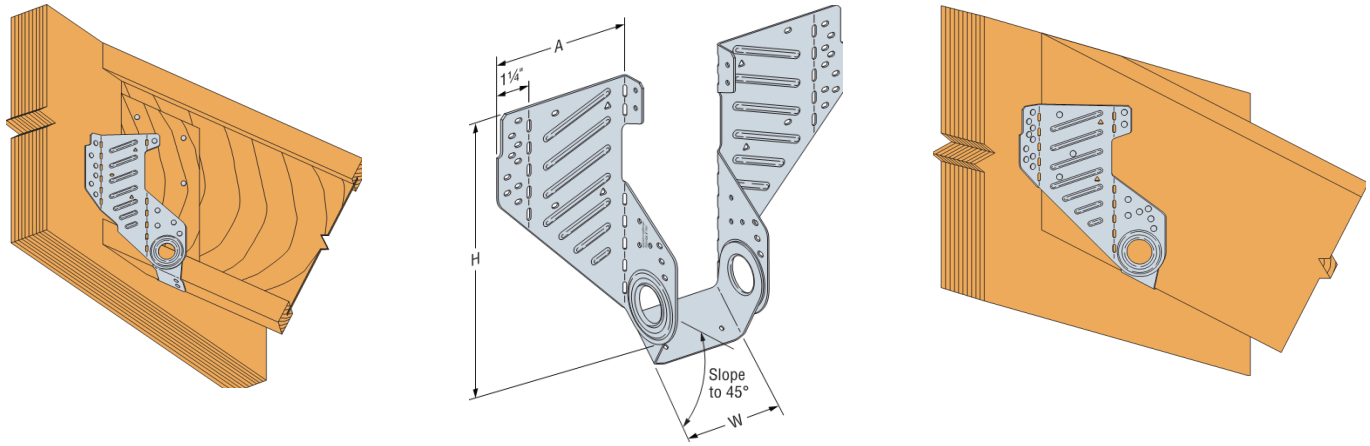

Installation on I-joist LSSR Installation on Sawn Lumber

FIGURE 11 – LSSR Field Adjustable Slopeable/Skewable Rafter Hanger

TABLE 12A—ALLOWABLE LOADS FOR THE MMHC HINGED ROOF CONNECTOR

MODEL NO.	ROOF PITCH	CONNECTOR QUANTITY	FASTENERS PER MEMBER	ALLOWABLE LOADS (lbf)			
				F1	F2	F3	Uplift
			10d x 1 ½“ Nails	(160)	(115/125/160)		(160)
MMHC	3:12	1	5	95	485	485	480
		2	10	215	955	955	870
	12:12	1	5	65	560	455	525
		2	10	140	1215	845	940

For **SI**: 1 inch = 25.4 mm, 1 lbs = 4.45N
1. All installations assume a minimum single-ply 2x member.
2. Double-ply applications with two-sided installations will achieve twice the published load for the one-sided installation.
3. Linear interpolation of the loads is allowed for roof slopes between 3:12 and 12:12 (25 percent to 45 percent).

TABLE 12B—ALLOWABLE LOADS FOR THE MMHC HINGED ROOF CONNECTOR KNEEWALL APPLICATION

MODEL NO.	ROOF PITCH	CONNECTOR QUANTITY	FASTENERS PER MEMBER	ALLOWABLE LOADS (lbf)	
				Download	Uplift
			10d x 1 ½” Nails	(115/125/160)	(160)
MMHC	3:12 – 12:12	1	5	1145	385

For **SI**: 1 inch = 25.4 mm, 1 lbs = 4.45N
1. All installations assume a minimum single-ply 2x member.
2. Double-ply applications with two-sided installations will achieve twice the published load for the one-sided installation.

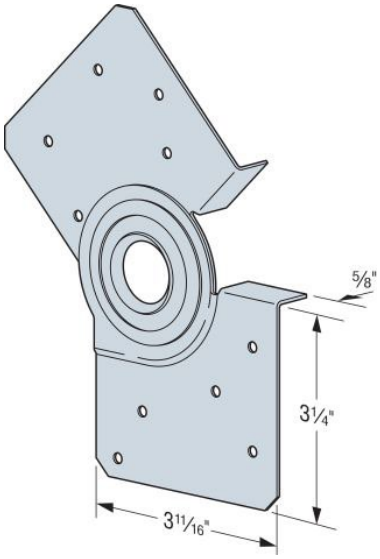

MMHC

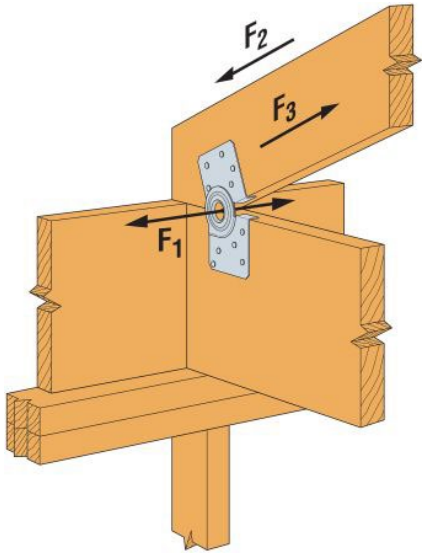

Typical MMHC Installation

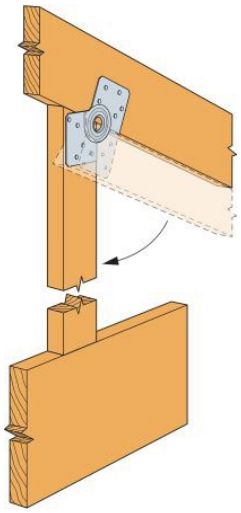

MMHC Kneewall Application

FIGURE 12 – MMHC HINGED ROOF CONNECTOR

TABLE 13—ALLOWABLE LOADS FOR THE ML ANGLE

MODEL NO.	CONNECTOR QUANTITY	H (in.)	¼" x 1 ½" SDS SCREWS (Total)	DF/SP ALLOWABLE LOADS (lbf)			
				(100)	(115)	(125)	(160)
ML23Z	1	3	4	405	405	405	405
ML24Z	1	4	6	595	595	595	595
ML26Z	1	6	8	1000	1075	1075	1075
ML28Z	1	8	10	1250	1280	1280	1280
ML210Z	1	10	12	1285	1285	1285	1285

For **SI**: 1 inch = 25.4 mm, 1 lbs. = 4.45N
1. Figure 13 this report provides definitions of angle nomenclature (H).
2. All fasteners are Simpson Strong-Tie SDS25112.

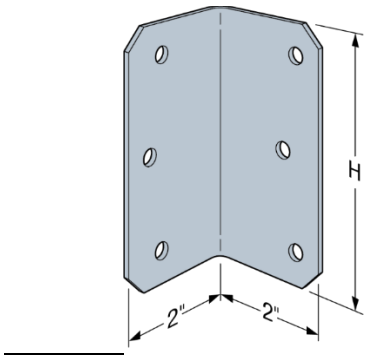

ML24Z (others similar)

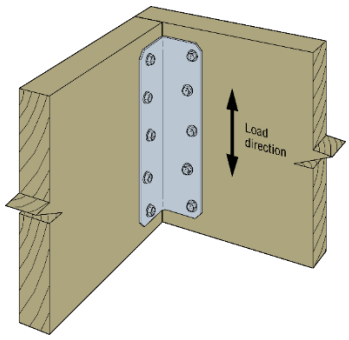

Typical ML28Z Installation (other sizes similar)

FIGURE 13 – ML ANGLE

TABLE 14—ALLOWABLE LOADS FOR THE BVLZ BRICK VENEER LEDGER CONNECTOR

MODEL NO.	FASTENERS		RIM		ALLOWABLE DOWNLOAD (lbf) (100/115)	
	Rim	Ledger	Size	Species	Direct on Rim	WSP
BVLZ	(2) SDWH271400G	(6) SD9x1.5	2x	DF	505	410

For **SI**: 1 inch = 25.4 mm, 1 lbs = 4.45N

1. The Rim board shall be designed to receive applied moment equal to: (Gap) x (Applied Load)
2. When cross-grain bending or cross-grain tension cannot be avoided in the Rim, additional reinforcement to resist such forces shall be considered by the Designer.
3. The BVLZ does not replace the need for lateral load resistance in accordance with 2021,2018 IRC Section R507.9.2.
4. The wet service factor has been applied to the BVLZ connection to the deck ledger.
5. Weatherproof ledger as required by code.
6. 2x is 1 ½ inches wide, minimum. Load values for sawn lumber are applicable to 1½-inch-wide structural composite lumber rim with equivalent specific gravity.
7. Wood Structural Panel (WSP) is OSB or plywood with a maximum thickness of 19/32 inch.
8. Fasteners: SD screws are Simpson Strong-Tie SD9112 and SDWH screws are Simpson Strong-Tie Strong-Drive Timber-Hex HDG screws.

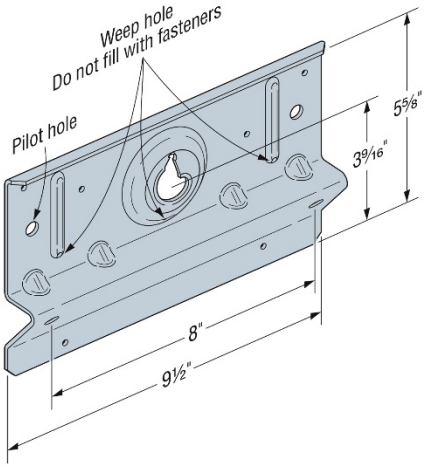

BVLZ Ledger Plate

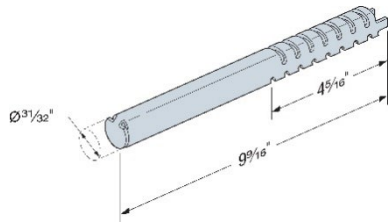

BVLZ Compression Strut

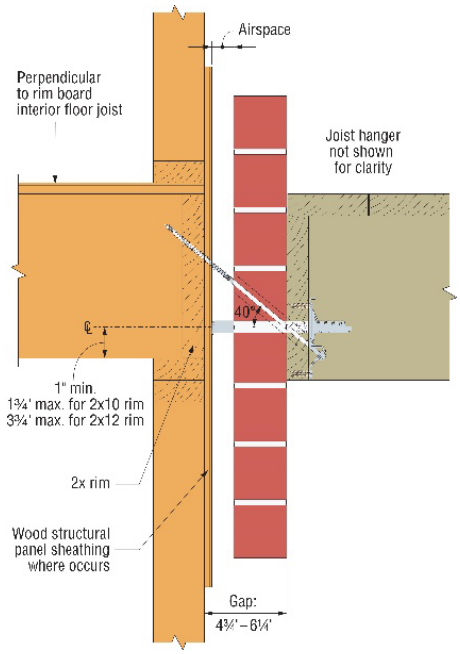

Typical BVLZ Installation

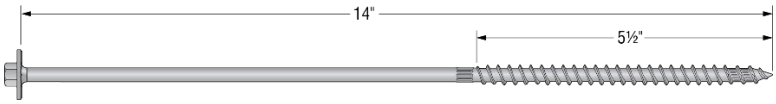

SDWH271400G

FIGURE 14 – BVLZ BRICK VENEER LEDGER CONNECTOR

TABLE 15 – ALLOWABLE LOADS FOR THE MMLU FACE-MOUNT HANGERS

MODEL NO.	DIMENSIONS[1]		FASTENERS[7] (Quantity) Type: 8d x 1½" or 10d x 1½"				ALLOWABLE LOADS[2,4] (lbf)	
	W	H	No. of Grids	Nails in Each Grid	Header	Joist[5]	UPLIFT[3]	DOWNLOAD
MMLU26	1 9/16	4 3/4	4	1	4	2	95	330
				2	8			635
				3	12			945
MMLU26-2	3 1/8	5 3/8	4	1	4	2	95	240
				2	8			525
				3	12			815
MMLU28	1 9/16	6 3/16	6	1	6	2	95	485
				2	12			945
MMLU28-2	3 1/8	7 1/16	6	1	6	2	95	380
				2	12			815
				3	18			1245
MMLU210	1 9/16	7 13/16	8	1	8	2	95	510
				2	16			1215
MMLUI211	1 9/16	11 5/8	10	1	10	2[4]	95[4]	705
				2	20			1215
MMLUI39	2 9/16	9 1/8	8	1	8	2[4]	95[4]	510
				2	16			1295
MMLUI311	2 9/16	11 5/8	10	1	10	2[4]	95[4]	705
				2	20			1295

For **SI**: 1 inch = 25.4 mm, 1 lbs = 4.45N

1. Connectors shall be installed with 8d x 1½ inch (0.131 inch x 1½ inch) or 10d x 1½ inch (0.148 inch x 1½ inch) nails.
2. Loads apply to sawn or engineered lumber with a minimum specific gravity of 0.42.
3. Tabulated values are based on a load duration factor (C_D) of 1.0 with no further increase allowed.
4. Two nails may be installed in the optional triangle holes for an increased allowable uplift load of 330 lb. (C_D= 1.0) or 445 lb. (C_D =1.6) for the MMLUI211, MMLUI39, and MMLUI311

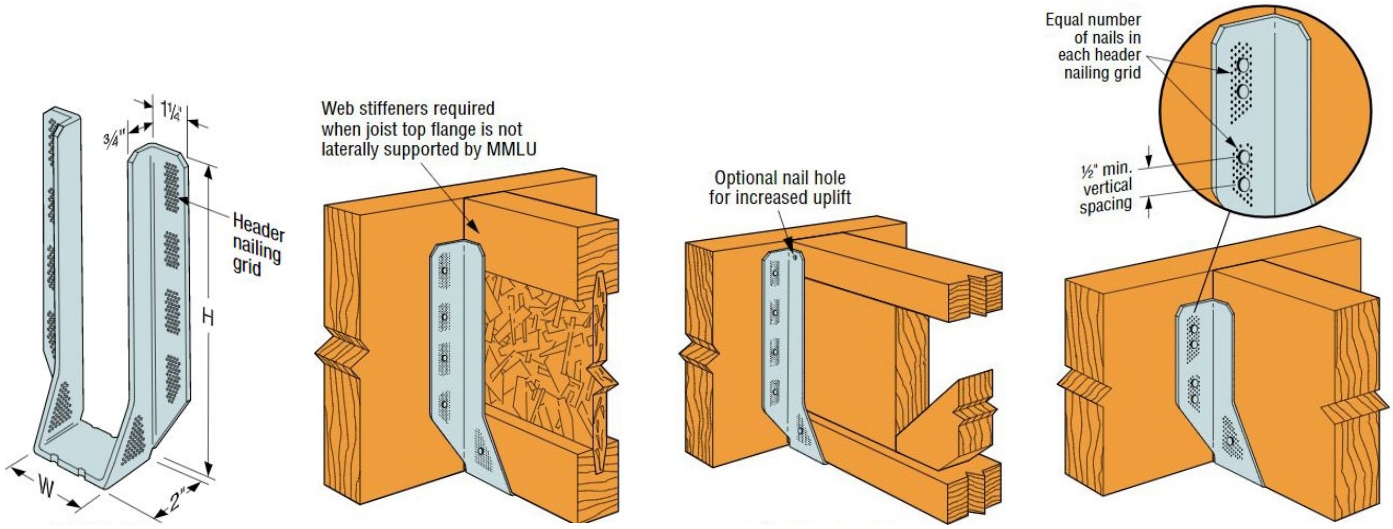

MMLU 210 (others similar) | **MMLU 210 Installation With an I-Joist** | **MMLUI 39 Installation With an Open Web Joist** | **Typical MMLU 26 Installation**

FIGURE 15 – MMLU FACE-MOUNT HANGERS

TABLE 16- ALLOWABLE LOADS FOR THE MMH8 AND RST-3 ROOF TIE-DOWNS

MODEL NO.	FASTENERS[7] (Quantity-Type)			ALLOWABLE UPLIFT LOADS[2,4] (lbf)	
	To Rafters/Truss	To Plates	To Studs	No Bearing Strip	5/8" Bearing Strip
MMH8	(5) 8d x 1½ "	(5) 8d x 1½ "	-	360	360
	(6) 8d x 1½ "	(6) 8d x 1½ "	-	465	465
RST-3 Into the wide face of the stud	(6) 8d x 1½ "	-	(7) 8d x 1½ "	370	365
	(6) SD #9 x 1½ "	-	(7) SD #9 x 1½ "	580	380
RST-3 Into the narrow face of the stud	(6) 8d x 1½ "	-	(7) 8d x 1½ "	345	315
	(6) SD #9 x 1½ "	-	(7) SD #9 x 1½ "	435	435

For **SI**: 1 inch = 25.4 mm, 1 lbs = 4.45N

1. Loads have been increased for wind or earthquake loading with no further increase allowed. The uplift loads shall be reduced using the appropriate value of C_D where other loads govern.
2. Allowable loads are for one connector. A minimum rafter thickness of 2½ inches shall be used when connectors are used on each side of the rafter and on the same side of the plate (exception: connectors installed such that fasteners on the opposite side do not interfere)
3. Loads apply to sawn or engineered lumber with a minimum specific gravity of 0.42.
4. When cross-grain bending or cross-grain tension cannot be avoided in the members, mechanical reinforcement to resist such forces may be required.
5. Connectors are shown on the inside of the wall for clarity. Installation on the outside of the wall is acceptable, provided a minimum 3½ inch overhang. For a Continuous Uplift Load Path, connections in the same area (i.e., truss-to-plate connector and plate-to-stud connector) shall be on the same side of the wall.
6. Fasteners: SD screws are Simpson Strong-Tie Strong-Drive Screw Model SD9112.

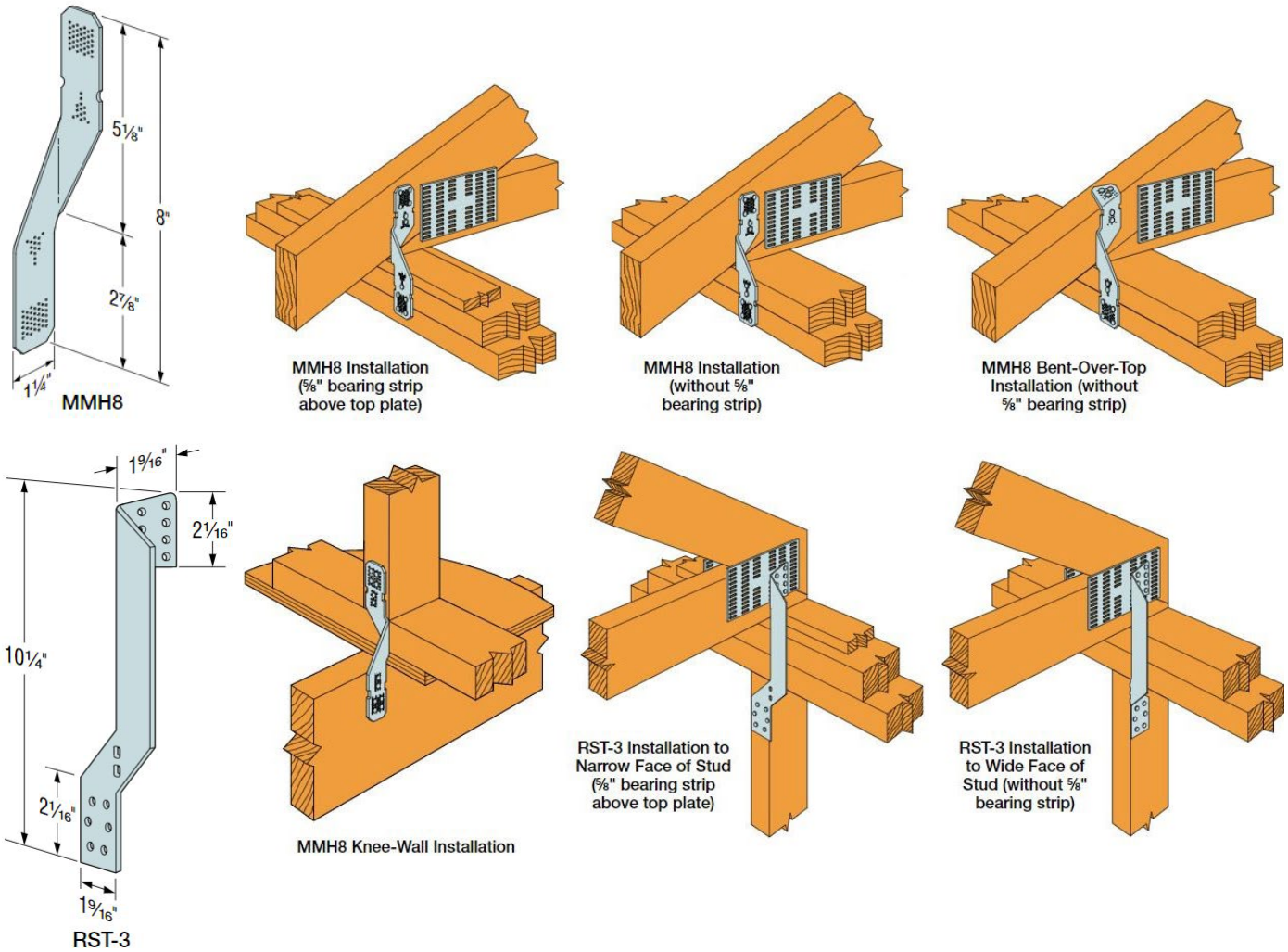

FIGURE 16 – MMH8 AND RST-3 ROOF TIE-DOWNS

TABLE 17 – SCLC STAIR CASSETTE LEDGER CONNECTOR[1,4]

Model No.	Supported Ledger Thickness (in)	DIMENSIONS (in)			FASTENER SCHEDULE[3] (Quantity – Type)		ALLOWABLE DOWNLOAD (lbf)[2]
		W	B	H	Header (in)	Ledger/ Header	CD=1.00/1.15
SCLC2	$1^1/_2$	5	$1^5/_8$	$7^9/_{32}$	(6) 0.148 X 2½	(2) SDS $^1/_4$ x 4½"	1,335
SCLC1.75	$1^3/_4$	5	$1^7/_8$	$7^9/_{32}$	(6) 0.148 X 2½	(2) SDS $^1/_4$ x 4½"	1,335

For SI: 1 inch = 25.4 mm, 1 lbf = 4.45 N.

1. Figure 17 of this report provides definitions of hanger nomenclature (W, B, H).
2. Tabulated allowable load capacities shall be selected based on the duration of load, C_D, as permitted by the applicable building code.
3. Ledger screws are driven up to a 22.5-degree angle from horizontal into the ledger to achieve the tabulated loads.
4. The use of the SCLC for torsional resistance is beyond the scope of this evaluation report.

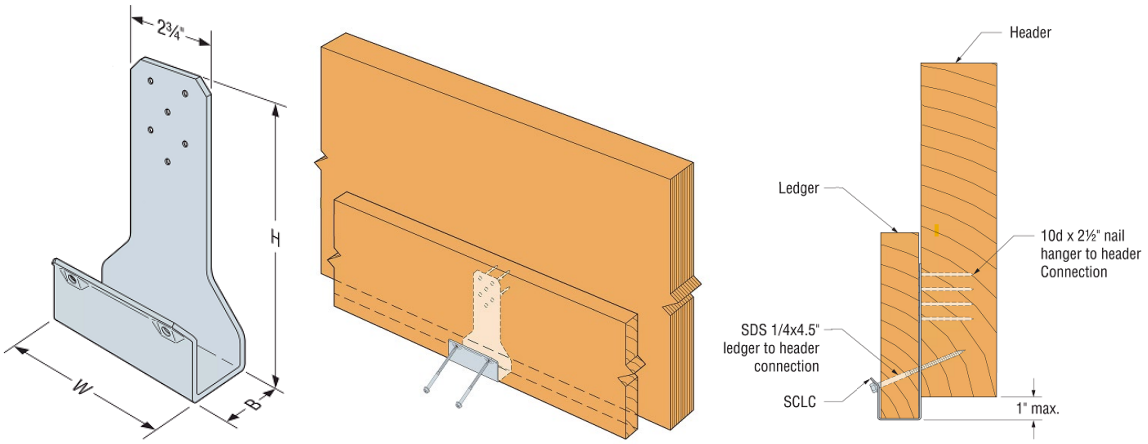

FIGURE 17 – SCLC STAIR CASSETTE LEDGER CONNECTOR

CITY OF LOS ANGELES SUPPLEMENT

SIMPSON STRONG-TIE COMPANY INC.
5956 West Las Positas Boulevard
Pleasanton, CA 94588
(800) 999-5099
www.strongtie.com

SIMPSON STRONG-TIE® MISCELLANEOUS CONNECTORS

CSI Division: 06 00 00—Wood, Plastics, and Composites
CSI Section: 06 05 23—Wood, Plastic, and Composite Fastenings

1.0 RECOGNITION

Simpson Strong-Tie miscellaneous connectors described in ER-280 and this supplemental report have been evaluated for use as wood framing connectors. Simpson Strong-Tie miscellaneous connectors have been evaluated for structural performance properties, subject to the requirements in ER-280 and this supplemental report. Simpson Strong-Tie miscellaneous connectors were evaluated for compliance with the following codes and regulations:

- 2023 City of Los Angeles Building Code (LABC)
- 2023 City of Los Angeles Residential Code (LARC)

2.0 LIMITATIONS

Use of the Simpson Strong-Tie miscellaneous connectors recognized in this report supplement is subject to the following limitations in addition to the limitations shown in ER-280:

2.1 Simpson Strong-Tie miscellaneous connectors shall be manufactured, identified, and installed in accordance with ER-280 and the manufacturer's published installation instructions. A copy of the installation instructions shall be available at the job site at all times during installation.

2.2. Calculations demonstrating compliance with the allowable loads described in ER-280 shall be submitted to the Structural Plan Check Division at the time of permit application. The calculations shall be prepared stamped, and signed by a California registered design professional.

2.3 Where applicable, adjustment factors noted in Section 4.1 of this report of ER-280 and the 2023 LABC shall be considered.

2.4 The design, installation, and inspection of Simpson Strong-Tie miscellaneous connectors shall be in accordance with LABC Chapters 16 and 17, as applicable, due to local amendments to these chapters.

2.5 This supplement expires concurrently with ER-280.

For additional information about this evaluation report please visit www.uniform-es.org or email us at info@uniform-es.org

FLORIDA SUPPLEMENT

SIMPSON STRONG-TIE COMPANY INC.
5956 West Las Positas Boulevard
Pleasanton, CA 94588
(800) 999-5099
www.strongtie.com

SIMPSON STRONG-TIE® MISCELLANEOUS CONNECTORS

CSI Division: 06 00 00—Wood, Plastics, and Composites
CSI Section: 06 05 23—Wood, Plastic, and Composite Fastenings

1.0 RECOGNITION

Simpson Strong-Tie miscellaneous connectors have been evaluated for structural performance properties, subject to the requirements in ER-280 and this supplemental report for compliance with the following codes and regulations:

- 2023 Florida Building Code, Building, 8th Edition, (FBC–Building)
- 2023 Florida Building Code, Residential, 8th Edition, (FBC–Residential)

2.0 LIMITATIONS

Use of the Simpson Strong-Tie miscellaneous connectors, recognized in this supplement for compliance with the FBC–Building and the FBC–Residential, are subject to the following limitations in addition to the limitations shown in the ER-280:

2.1 The design and installation of Simpson Strong-Tie miscellaneous connectors and ties recognized in this supplement shall be in accordance with the 2021 International Building Code and the 2021 International Residential Code as noted in ER-280.

2.2 Load combinations shall be in accordance with Sections 1605.1 or 1605.2 of the FBC–Building, as applicable.

2.3 Design wind loads shall be in accordance with Section 1609.1.1 of the FBC–Building or Section R301.2.1.1 of the FBC–Residential, as applicable, and Section 1620 of the FBC–Building where used in High-velocity Hurricane Zones (HVHZ).

2.4 The use of Simpson Strong-Tie® miscellaneous connectors recognized in this supplement complies with the High-velocity Hurricane Zone (HVHZ) provisions set forth in Sections 2324.2 of the FBC–Building. Where used in accordance with Section 2321.6 of FBC–Building, the structural angles, clips, and ties shall be designed to resist the uplift forces as required in Section 1620 (HVHZ) of the FBC–Building or 700 pounds (3114 N), whichever is greater, in accordance with FBC–Building Section 2321.7.

2.5 Simpson Strong-Tie structural miscellaneous connectors shall be manufactured, identified, and installed in accordance with ER-280 and the manufacturer's published installation instructions. A copy of the installation instructions shall be available at the job site continuously during installation. If there is a conflict between this report and the manufacturer's published installation instructions, the more restrictive prevails.

2.6 For products falling under Section (5)(d) of Florida Rule 61G20-3.008, verification that the report holder's quality assurance program is audited by a quality assurance entity approved by the Florida Building Commission (or the building official when the report holder does not possess an approval by the Commission) is required to provide oversight and determine that the products are being manufactured as described in this evaluation report to establish continual product performance.

2.7 This supplement expires concurrently with ER-280.

For additional information about this evaluation report please visit www.uniform-es.org or email us at info@uniform-es.org