ONLINE CERTIFICATIONS DIRECTORY

Construction No. 298
TGKX.298
Roof Deck Constructions

Page Bottom

Design/System/Construction/Assembly Usage Disclaimer

- Authorities Having Jurisdiction should be consulted in all cases as to the particular requirements covering the installation and use of UL Certified products, equipment, system, devices, and materials.
- Authorities Having Jurisdiction should be consulted before construction.
- Fire resistance assemblies and products are developed by the design submitter and have been investigated by UL for compliance with applicable requirements. The published information cannot always address every construction nuance encountered in the field.
- When field issues arise, it is recommended the first contact for assistance be the technical service staff provided by the product manufacturer noted for the design. Users of fire resistance assemblies are advised to consult the general Guide Information for each product category and each group of assemblies. The Guide Information includes specifics concerning alternate materials and alternate methods of construction.
- Only products which bear UL's Mark are considered Certified.

Roof Deck Constructions

See General Information for Roof Deck Constructions

Construction No. 298

July 19, 2013

Uplift — Class 90

Fire Not Investigated

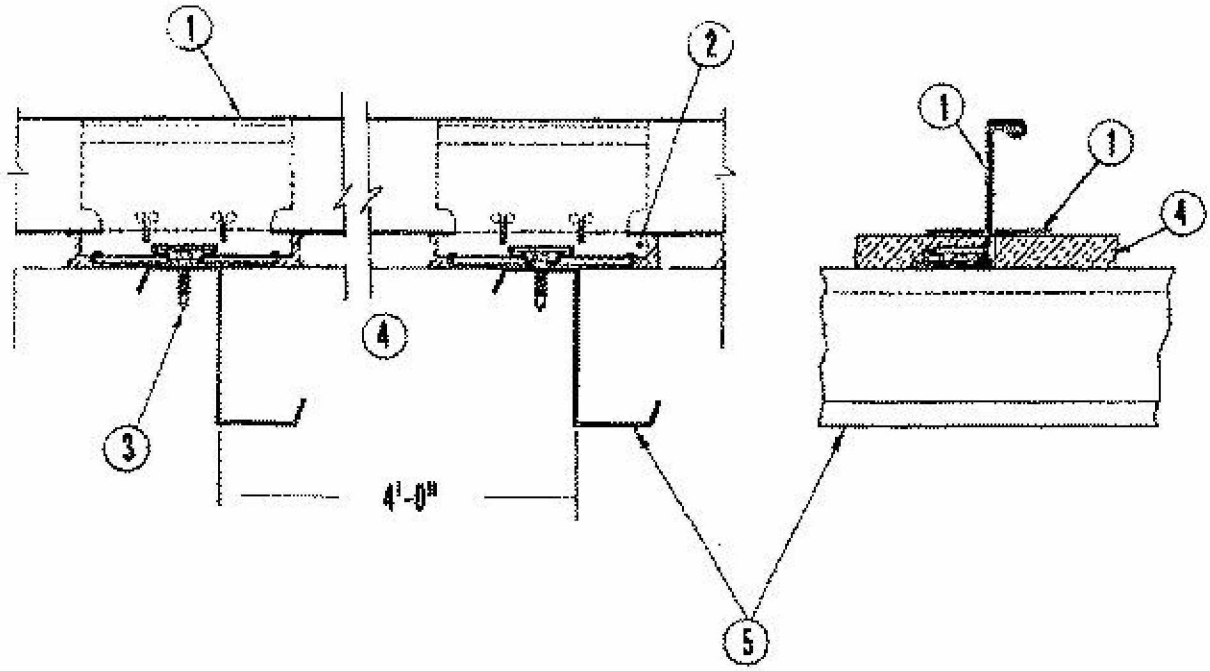

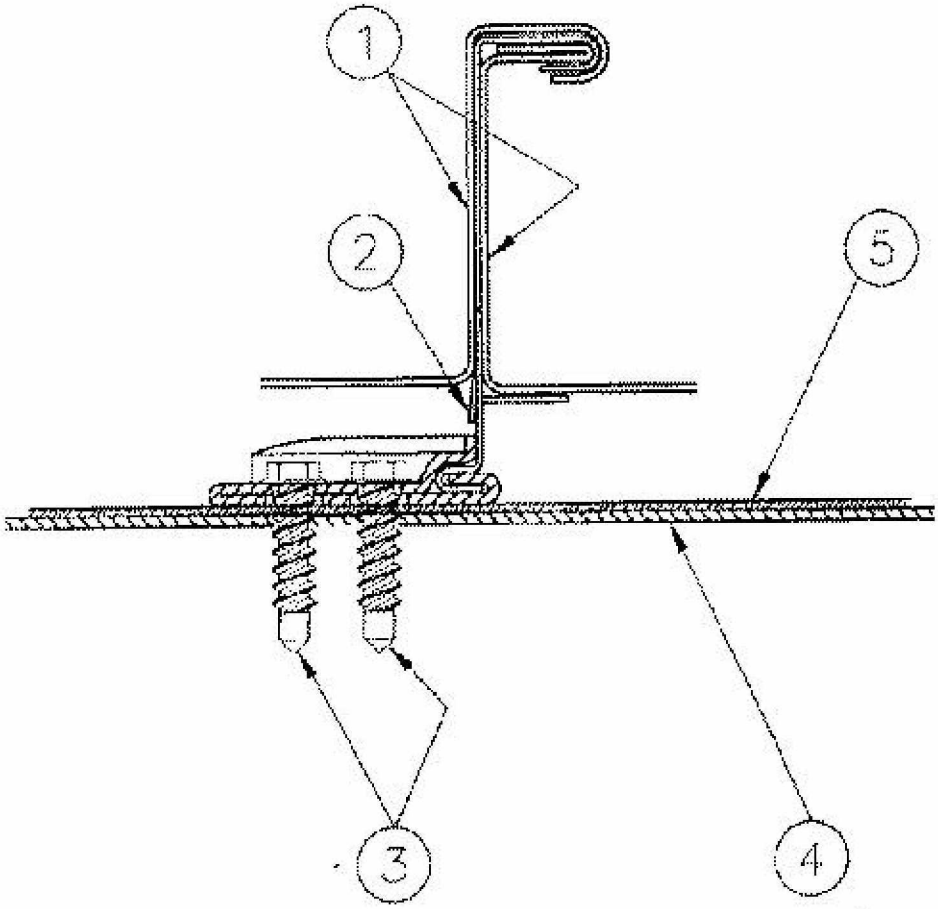

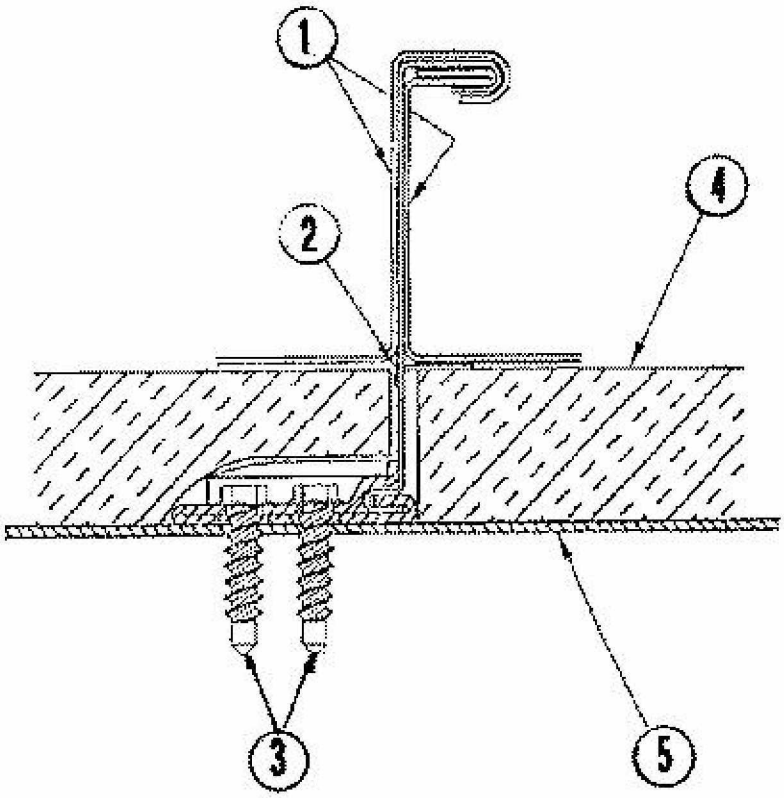

1. **Metal Roof Deck Panels*** — No. 24 MSG min thickness coated steel, 18 in. wide, 2 in. high at the female rib, or min 0.032 in. thick zinc or min. 0.022 in. thick copper, 16 in. wide, 2 in. high at the female rib. Panel continuous over two or

more spans without end laps. A line of sealant may be used along panel side ribs. Adjacent panels to be seamed together along sides using an electric seaming tool with seams to be fully crimped. Seaming operation to include "Roof Deck Fasteners" (Items 2, 2A and 2B). For zinc and copper panels all panel clips spaced max 36 in. OC.

RAY BROS INC (View Classification) — "RBI - 200"

A-LERT ROOF SYSTEMS (View Classification) — "A-Lert KR", "A-Lert KR w/offset"

ATAS INTERNATIONAL INC (View Classification) — "2" Field-Lok Panel FLN"

BRB ROOFING & MFG (View Classification) — "WEATHERBOSS"

C B S OF CHARLESTON INC (View Classification) — "CCS 2.12"

CENTURION INDUSTRIES INC, DBA TFC CANOPY (View Classification) — "Centurion Hugo-Lox", "Centurion Hugo-Lox w/offset"

CROY CONSTRUCTION INC (View Classification) — "KR-24"

KENT CONSTRUCTION AND ROOFING INC (View Classification) — "KRS 2400"

KNUDSON MFG INC (View Classification) — "KR-24 Panel"

MERCHANT & EVANS INC (View Classification) — "Zip-Lok"

METAL ROOF CONTRACTORS INC (View Classification) — "MRC-16"

RPR INC, DBA RAIN PROOF ROOFING (View Classification) — "RP-200"

SAN ANTONIO QUALITY METALS (View Classification) — "ML-200"

2. **Roof Deck Fasteners* (Panel Clips) —** Two part assembly consisting of a No. 16 MSG min thick coated steel base approximately 1-7/8 in. wide and 1-5/8 in. long and a No. 22 MSG min thick coated steel upper tab section. Height 2-7/16 in. min, 3 in. max, width 4-5/16 in.

KNUDSON MFG INC (View Classification) — "KR-24 Low-Floating Clip", "KR-24 High-Floating Clip"

2A. **Roof Deck Fasteners* — (Panel Clips) —** (Not Shown) — One part assembly, No. 22 MSG min coated steel. Height, 2-3/8 in. min, 3 in. max, width 3 in.

BUILDING PRODUCTS DEVELOPMENT INC (View Classification) — "NC3300", "NCF-3300", "NCF-3300-SS" Series Clip

KNUDSON MFG INC (View Classification) — "KR-24 Low-Fixed Clip", "KR-24 High-Fixed Clip"

2B. **Roof Deck Fasteners* — (Panel Clips) —** (Not Shown) — One part assembly, No. 20 MSG min. coated steel. Height, 2-5/32 in., Width, 3 in.

RAY BROS INC (View Classification) — "RBI-200 FIXED CLIP"

3. **Fasteners (Screws) —** For panel clip to purlin attachment to be No. 12-16 by 1 in. long self-drilling, self-tapping, hex-washer head plated steel screws used without sealing washers. Two fasteners per panel clip used, inserted into panel clip guide holes.

4. **Thermal Spacer —** Optional — Expanded polystyrene, 1 in. thick, 3 in. wide cut to fit between fasteners (Item 3).

5. **Purlins —** No. 16 MSG min thickness steel (50,000 psi min yield strength). Spacing — 48 in. OC.

Refer to General Information, Roof Deck Construction, (Roofing Materials and Systems Directory) for items not evaluated.

*Bearing the UL Classification Mark

Last Updated on 2013-07-19

Questions? Print this page Terms of Use Page Top

© 2013 UL LLC

When the UL Leaf Mark is on the product, or when the word "Environment" is included in the UL Mark, please search the UL Environment database for additional information regarding this product's certification.

The appearance of a company's name or product in this database does not in itself assure that products so identified have been manufactured under UL's Follow-Up Service. Only those products bearing the UL Mark should be considered to be Certified and covered under UL's Follow-Up Service. Always look for the Mark on the product.

UL permits the reproduction of the material contained in the Online Certification Directory subject to the following conditions: 1. The Guide Information, Assemblies, Constructions, Designs, Systems, and/or Certifications (files) must be presented in their entirety and in a non-misleading manner, without any manipulation of the data (or drawings). 2. The statement "Reprinted from the Online Certifications Directory with permission from UL" must appear adjacent to the extracted material. In addition, the reprinted material must include a copyright notice in the following format: "© 2013 UL LLC".