ICC-ES Evaluation Report

ESR-2713

Reissued September 2023

Subject to renewal September 2024

This report also contains:

- LABC Supplement

- FBC Supplement

ICC-ES Evaluation Reports are not to be construed as representing aesthetics or any other attributes not specifically addressed, nor are they to be construed as an endorsement of the subject of the report or a recommendation for its use. There is no warranty by ICC Evaluation Service, LLC, express or implied, as to any finding or other matter in this report, or as to any product covered by the report.

Copyright © 2023 ICC Evaluation Service, LLC. All rights reserved.

DIVISION: 03 00 00—CONCRETE **Section: 03 16 00—Concrete Anchors** **DIVISION: 05 00 00—METALS** **Section: 05 05 19—Post-Installed Concrete Anchors**	**REPORT HOLDER: SIMPSON STRONG-TIE COMPANY INC.**	**EVALUATION SUBJECT: TITEN HD® SCREW ANCHOR, TITEN HD® ROD HANGER AND TITEN HD® ROD COUPLER FOR CRACKED AND UNCRACKED CONCRETE**	

1.0 EVALUATION SCOPE

Compliance with the following codes:

- 2021, 2018 and 2015 *International Building Code®* (IBC)
- 2021, 2018 and 2015 *International Residential Code®* (IRC)

For evaluation for compliance with codes adopted by *Los Angeles Department of Building and Safety (LADBS)*, see ESR-2713 LABC and LARC Supplement.

Property evaluated:

Structural

2.0 USES

The Simpson Strong-Tie® Titen HD® Screw Anchor is used as anchorage to resist static, wind and seismic (Seismic Design Categories A through F) tension and shear loads when installed into cracked and uncracked normalweight concrete and lightweight concrete members having a specified compressive strength, f'_c, from 2,500 psi to 8,500 psi (17.2 MPa to 58.6 MPa); and when installed into the soffit of cracked and uncracked sand-lightweight or normalweight concrete over profile steel deck having a minimum specified compressive strength, f'_c, of 3,000 psi (20.7 MPa). The Titen HD® Screw Anchor is used to fasten miscellaneous building materials to the concrete. The $^1/_4$-, $^3/_8$- and $^1/_2$-inch-diameter (6.4, 9.5 and 12.7 mm) screw anchors may be installed in the topside of cracked and uncracked normalweight or sand-lightweight concrete-filled steel deck having a minimum member thickness, $h_{min,deck}$, as noted in Table 4 of this report, and a specified compressive strength, f'_c, of 2,500 psi to 8,500 psi (17.2 MPa to 58.6 MPa).

The Simpson Strong-Tie Titen HD® Rod Hanger is used as anchorage to resist static, wind and seismic (Seismic Design categories A through F) tension loads when installed into cracked and uncracked normalweight concrete and lightweight concrete members having a specified compressive strength, f'_c, from 2,500 psi to 8,500 psi (17.2 Mpa to 58.6 Mpa); and when installed into the soffit of cracked and uncracked sand-lightweight or normalweight concrete over profile steel deck having a minimum specified compressive strength, f'_c, of 3,000 psi (20.7 MPa). The Titen HD® Rod Hanger is used to attach threaded rod to concrete for the purpose of hanging pipes, HVAC equipment and other similar building components.

The Simpson Strong-Tie Titen HD® Rod Coupler is used as anchorage to resist static, wind and seismic (Seismic Design categories A through F) tension loads when installed into cracked and uncracked normalweight and lightweight concrete members having a specified compressive strength, f'_c, from 2,500 psi to 8,500 psi (17.2 MPa to 58.6 MPa). The Titen HD® Rod Coupler is used in conjunction with a rod tiedown system for wood framed structures.

The Simpson Strong-Tie® Titen HD® Screw Anchors, Rod Hangers and Rod Couplers (collectively referred to as Titen HD® products) are alternatives to anchors described in Section 1901.3 of 2021, 2018 and 2015 IBC. The anchors may also be used where an engineered design is submitted in accordance with Section R301.1.3 of the IRC.

3.0 DESCRIPTION

3.1 Titen HD® Screw Anchor:

The Titen HD® Screw Anchor is a carbon steel threaded anchor with a hex-washer head, a countersunk head or a flat-washer head. The screw anchor is manufactured from heat-treated steel complying with SAE J403 Grade 10B21, and either has an electrodeposited coating of zinc, minimum thickness 0.0002 inch (5 µm) in accordance with ASTM B633, SC1, Type III or is mechanically galvanized in accordance with ASTM B695, Class 65, Type I. Titen HD® Screw Anchors with electrodeposited zinc coating are available with nominally $^1/_4$-, $^3/_8$-, $^1/_2$-, $^5/_8$-, and $^3/_4$-inch (6.4, 9.5, 12.7, 15.9 and 19.1 mm) shank diameters with a hex-washer head, with $^1/_4$- and $^3/_8$-inch (6.4 and 9.5 mm) shank diameters with a countersunk head and with $^1/_2$- and $^5/_8$- inch (12.7 and 15.9 mm) shank diameters with a flat-washer head. Mechanically galvanized Titen HD® Screw Anchors are available with nominally $^3/_8$-, $^1/_2$-, $^5/_8$-, and $^3/_4$-inch (9.5, 12.7, 15.9 and 19.1 mm) shank diameters with a hex-washer head and with $^1/_2$- and $^5/_8$- inch (12.7 and 15.9 mm) shank diameters with a flat-washer head. Figure 1A illustrates a typical Titen HD® Screw Anchor. Titen HD® Screw Anchors are available in various lengths for each diameter. Refer to Table 6 for catalog number information.

3.2 Titen HD® Rod Hanger:

The Titen HD® Rod Hanger is a carbon steel threaded anchor with an oversized hex-washer head that is internally threaded. The rod hanger is manufactured from heat-treated steel complying with SAE J403 Grade 10B21, and has an electrodeposited coating of zinc, minimum thickness 0.0002 inch (5 µm), in accordance with ASTM B633, SC1, Type III. The Titen HD® Rod Hanger is available with a nominally $^1/_4$-inch (6.4 mm) shank diameter with $^1/_4$-inch or $^3/_8$-inch diameter (6.4 mm or 9.5 mm) internal threads, and with a $^3/_8$-inch (9.5 mm) shank diameter with $^3/_8$-inch (9.5 mm), 10 mm diameter or $^1/_2$-inch-diameter (12.7 mm) internal threads. Figure 1B illustrates the Titen HD® Rod Hanger. Refer to Table 6 for catalog number information.

3.3 Titen HD® Rod Coupler:

The Titen HD® Rod Coupler is a carbon steel threaded anchor with an extended shank and an oversized hex-washer head that is internally threaded. The rod coupler is manufactured from heat-treated steel complying with SAE J403 Grade 10B21, and has an electrodeposited coating of zinc, minimum thickness 0.0002 inch (5 µm), in accordance with ASTM B633, SC1, Type III. The Titen HD® Rod Couplers are available with a nominally $^3/_8$-inch (9.5 mm) shank diameter with $^3/_8$-inch diameter (9.5 mm) internal threads, and with a $^1/_2$-inch (12.7 mm) shank diameter with $^1/_2$-inch-diameter (12.7 mm) internal threads. Figure 1C illustrates the Titen HD® Rod Coupler. Refer to Table 6 for catalog number information.

3.4 Concrete:

Normalweight and lightweight concrete must comply with Sections 1903 and 1905 of the IBC.

3.5 Profile Steel Deck:

The profile steel deck must comply with the applicable configuration in Figures 3, 4, and 5 of this report and have a minimum base steel thickness of 0.035 inch (0.889 mm). Steel deck in Figure 3 must comply with ASTM A653/A653M SS Grade 33, and have a minimum yield strength of 33 ksi (228 MPa). Steel deck in Figures 4 and 5 must comply with ASTM A653/A653M SS Grade 50 and have a minimum yield strength of 50 ksi (345 MPa).

4.0 DESIGN AND INSTALLATION

4.1 Strength Design:

4.1.1 General: Design strength of the Titen HD® products complying with the 2021 IBC as well as Section R301.1.3 of the 2021 IRC, must be determined in accordance with ACI 318-19 Section 17 and this report.

Design strength of Titen HD® products complying with the 2018 and 2015 IBC as well as Section R301.1.3 of the 2018 and 2015 IRC, must be determined in accordance with ACI 318-14 Section 17 and this report.

Design parameters provided in Tables 1 through 5 and in Figures 2 through 5 of this report are based on the 2021 IBC (ACI 318-19) and on the 2018 and 2015 IBC (ACI 318-14) unless noted otherwise in Sections 4.1.1 through 4.1.12 of this report.

The strength design of Titen HD® products must comply with ACI 318-19 17.5.1.2 or ACI 318-14 17.3.1, as applicable, except as required in ACI 318-19 17.10 or ACI 318-14 17.2.3. Strength reduction factors, ϕ, as given in ACI 318-19 17.5.3 or ACI 318-14 17.3.3, as applicable, and noted in Tables 2A, 2B, 3 and 5 of this report, must be used for load combinations calculated in accordance with Section 1605.1 of the 2021 IBC or Section 1605.2.1 of the 2018 and 2015 IBC and Section 5.3 of ACI 318 (-19 and -14), as applicable. The value of f'_c used in the calculations must be limited to a maximum of 8,000 psi (55.2 MPa), in accordance with ACI 318-19 17.3.1 or ACI 318-14 17.2.7 as applicable.

4.1.2 Requirements for Static Steel Strength in Tension: The nominal steel strength of a single Titen HD® product in tension, N_{sa}, calculated in accordance with ACI 318-19 17.6.1.2 or ACI 318-14 17.4.1.2, as applicable, is given in Tables 2A or 2B of this report. The strength reduction factor, ϕ, corresponding to a brittle steel element must be used for all Titen HD® products, as given in Tables 2A and 2B.

4.1.3 Requirements for Static Concrete Breakout Strength in Tension: The nominal concrete breakout strength of a single Titen HD® product or a group of products in tension, N_{cb} or N_{cbg}, respectively, must be calculated in accordance with ACI 318-19 17.6.2 or ACI 318-14 17.4.2, as applicable, with modifications as described in this section. The basic concrete breakout strength of a single Titen HD® product in tension in cracked concrete, N_b, must be calculated in accordance with ACI 318-19 17.6.2.2 or ACI 318-14 17.4.2.2, as applicable, using the values of h_{ef} and k_{cr} as given in Tables 2A or 2B of this report. The nominal concrete breakout strength in tension in regions where analysis indicates no cracking in accordance with ACI 318-19 17.6.2.5.1(a) or ACI 318-14 17.4.2.6, as applicable, must be calculated with the value of k_{uncr} as given in Tables 2A or 2B of this report and with $\Psi_{c,N}$ = 1.0.

Determination of concrete breakout strength in accordance with ACI 318-19 17.6.2 or ACI 318-14 17.4.2 is not required for Titen HD® products installed in the lower flute or upper flute of the soffit of profile steel deck floor and roof assemblies with sand-lightweight or normalweight concrete fill as shown in Figures 3 or 4.

4.1.4 Requirements for Static Pullout Strength in Tension: The nominal pullout strength of a single Titen HD® product or a group of products in tension in accordance with ACI 318-19 17.6.3.1 and 17.6.3.2.1 or ACI 318-14 17.4.3.1 and 17.4.3.2, as applicable, in cracked and uncracked concrete, $N_{p,cr}$ and $N_{p,uncr}$, respectively, is given in Table 2A or 2B of this report and must be used in lieu of N_p. In regions of a concrete member where analysis indicates no cracking at service level loads in accordance with ACI 318-19 17.6.3.3 or ACI 318-14 17.4.3.6, as applicable, the nominal pullout strength in uncracked concrete, $N_{p,uncr}$, applies. Where values for $N_{p,cr}$ or $N_{p,uncr}$ are not provided in Tables 2A or 2B, the pullout strength does not need to be considered in design.

The nominal pullout strength in cracked concrete for Titen HD® products installed in the lower flute or upper flute of the soffit of sand-lightweight or normalweight concrete filled profile steel deck floor and roof assemblies as shown in Figures 3 and 4, $N_{p,deck,cr}$, is given in Table 5. $N_{p,deck,cr}$ must be used in lieu of $N_{p,cr}$. In regions of a concrete member where analysis indicates no cracking in accordance with ACI 318-19 17.6.3.3 or ACI 318-14 17.4.3.6, as applicable, the nominal pullout strength in uncracked concrete $N_{p,deck,uncr}$ applies in lieu of $N_{p,uncr}$.

The value of $\Psi_{c,p}$ equals 1.0 for all design cases.

4.1.5 Requirements for Static Steel Strength in Shear: The nominal steel strength in shear, V_{sa}, of a single Titen HD® Screw Anchor in accordance with ACI 318-19 17.7.1.2 or ACI 318-14 17.5.1.2, as applicable, is given in Table 3 of this report and must be used in lieu of the values derived by calculation from ACI 318-19 Eq. 17.7.1.2b or ACI 318-14 Eq. 17.5.1.2b, as applicable. The strength reduction factor, ϕ, corresponding to a brittle steel element must be used for all Screw Anchors, as described in Table 3.

The nominal shear strength, $V_{sa,deck}$, of a single Screw Anchor installed in the lower flute or upper flute of the soffit of sand-lightweight or normalweight concrete filled profile steel deck floor and roof assemblies, as shown in Figures 3 and 4, is given in Table 5.

Steel shear strengths for Titen HD® Rod Hangers and Rod Couplers have not been evaluated and are outside the scope of this report.

4.1.6 Requirements for Static Concrete Breakout Strength in Shear: The nominal concrete breakout strength in shear of a single Titen HD® Screw Anchor or group of Screw Anchors, V_{cb} or V_{cbg}, respectively, must be calculated in accordance with ACI 318-19 17.7.2 or ACI 318-14 17.5.2, as applicable, with modifications as described in this section. The basic concrete breakout strength in shear of a single Screw Anchor in cracked concrete, V_b, must be calculated in accordance with ACI 318-19 17.7.2.2.1 or ACI 318-14 17.5.2.2, as applicable, using the values of l_e and d_a as given in Table 3 of this report. The modification factors in ACI 318-19 17.7.2.1.2, 17.7.2.3.1, 17.7.2.4.1 and 17.7.2.5.1 or ACI 318-14 17.5.2.4, 17.5.2.5, 17.5.2.6 and 17.5.2.7 must be applied to the basic breakout strength in shear, V_b, as applicable.

For Titen HD® Screw Anchors installed in the topside of concrete-filled steel deck assemblies, as shown in Figure 5, the nominal concrete breakout strength of a single Screw Anchor or group of Screw Anchors in shear, V_{cb} or V_{cbg}, respectively, must be calculated in accordance with ACI 318-19 17.7.2 or ACI 318-14 17.5.2, as applicable, using the actual member thickness, $h_{min,deck}$, in the determination of A_{Vc}. Minimum topping thickness for Screw Anchors in the topside of concrete-filled steel deck assemblies is given in Table 4 of this report.

Calculation of the concrete breakout strength in accordance with ACI 318-19 17.7.2 or ACI 318-14 17.5.2, as applicable, is not required for Screw Anchors installed in the lower flute or upper flute of the soffit of sand-lightweight or normalweight concrete filled profile steel deck floor and roof assemblies, as shown in Figures 3 and 4.

Concrete breakout strength in shear for Titen HD® Rod Hangers and Rod Couplers has not been evaluated and is outside the scope of this report.

4.1.7 Requirements for Static Concrete Pryout Strength in Shear: The nominal concrete pryout strength for a single Titen HD® Screw Anchor or group of Screw Anchors, V_{cp} or V_{cpg}, respectively, must be calculated in accordance with ACI 318-19 17.7.3 or ACI 318-14 17.5.3, as applicable, using the coefficient for pryout strength, k_{cp}, provided in Table 3 of this report and the value of nominal breakout strength in tension of a single Screw Anchor or group Screw Anchors, N_{cb} or N_{cbg}, as calculated in Section 4.1.3 of this report.

For Screw Anchors installed in the lower flute or upper flute of the soffit of sand-lightweight or normal weight concrete filled profile steel deck floor and roof assemblies, as shown in Figures 3 and 4, calculation of the concrete pryout strength in accordance with ACI 318-19 17.7.3 or ACI 318-14 17.5.3, as applicable, is not required.

Concrete pryout strength in shear for Titen HD® Rod Hangers and Rod Couplers has not been evaluated and is outside the scope of this report.

4.1.8 Requirements for Seismic Design:

4.1.8.1 General: When the Titen HD® product design includes seismic loads, the design must be performed in accordance with ACI 318-19 17.10 or ACI 318-14 17.2.3, as applicable. Modifications to ACI 318-19 17.10 or ACI 318-14 17.2.3 must be applied under Section 1905.1.8 of the 2021, 2018 and 2015 IBC, as applicable.

Except for use in Seismic Design Category A or B of the IBC, design strengths must be determined presuming the concrete is cracked unless it can be demonstrated that the concrete remains uncracked.

The nominal steel strength and nominal concrete breakout strength of Titen HD® products in tension, and the nominal concrete breakout strength and pryout strength of Screw Anchors in shear, must be calculated according to ACI 318-19 17.6 and 17.7 or ACI 318-14 17.4 and 17.5, as applicable, respectively, taking into account the corresponding values in Tables 1 through 5 of this report.

The Titen HD® products comply with ACI 318 (-19 and -14) 2.3, as applicable, as brittle steel elements and must be designed in accordance with ACI 318-19 17.10.5 or 17.10.6, ACI 318-14 17.2.3.4 or 17.2.3.4, as applicable.

4.1.8.2 Seismic Tension: The nominal steel strength and concrete breakout strength in tension must be determined in accordance with ACI 318-19 17.6.1 and 17.6.2 or ACI 318-14 17.4.1 and 17.4.2, as applicable, as described in Sections 4.1.2 and 4.1.3 of this report. In accordance with ACI 318-19 17.6.3.2.1 or

ACI 318-14 17.4.3.2, as applicable, the appropriate value for nominal pullout strength in tension for seismic loads, $N_{p,eq}$ or $N_{p,deck,cr}$, described in Tables 2A, 2B and 5 of this report, must be used in lieu of N_p.

4.1.8.3 Seismic Shear: The nominal concrete breakout and concrete pryout strength in shear must be determined in accordance with ACI 318-19 17.7.2 and 17.7.3 or ACI 318-14 17.5.2 and 17.5.3, as applicable, as described in Sections 4.1.6 and 4.1.7 of this report. In accordance with ACI 318-19 17.7.1.2 or ACI 318-14 17.5.1.2, as applicable, the appropriate value for nominal steel strength in shear for seismic loads, $V_{sa,eq}$, or $V_{sa,deck,eq}$ described in Tables 3 and 5 of this report, must be used in lieu of V_{sa}.

4.1.9 Interaction of Tensile and Shear Forces: Titen HD® Screw Anchors or groups of Screw Anchors that are subjected to combined axial (tensile) and shear loadings must be designed in accordance with ACI 318-19 17.8 or ACI 318-14 17.6, as applicable.

4.1.10 Requirements for Minimum Member Thickness, Minimum Titen HD® Product Spacing and Minimum Edge Distance: For Titen HD® products, in lieu of ACI 318-19 17.9.2 or ACI 318-14 17.7.1 and 17.7.3, as applicable, values of c_{min} and s_{min} provided in Tables 1A and 1B of this report must be used. In lieu of ACI 318-19 17.9.4 or ACI 318-14 17.7.5, minimum member thickness, h_{min}, must comply with Tables 1A and 1B of this report, as applicable.

For Titen HD® Screw Anchors installed in the topside of normalweight or sand-lightweight concrete over profile steel deck floor and roof assemblies, installation parameters are provided in Table 4 and Figure 5 of this report.

For Screw Anchors and Rod Hangers installed in the lower flute or upper flute of the soffit of sand-lightweight or normalweight concrete filled profile steel deck floor and roof assemblies, details in Figures 3 and 4 must be observed. The minimum Screw Anchor or Rod Hanger spacing along the flute must be the greater of $3h_{ef}$ or 1.5 times the flute width.

4.1.11 Requirements for Critical Edge Distance: In applications where $c < c_{ac}$ and supplemental reinforcement to control splitting of the concrete is not present, the concrete breakout strength in tension for uncracked concrete, calculated according to ACI 318-19 17.6.2 or ACI 318-14 17.4.2, as applicable, must be further multiplied by the factor $\psi_{cp,N}$ given by Eq-1:

$$\psi_{cp,N} = \frac{c}{c_{ac}} \qquad \text{(Eq-1)}$$

whereby the factor $\psi_{cp,N}$ need not be taken less than $\frac{1.5h_{ef}}{c_{ac}}$. For all other cases, $\psi_{cp,N} = 1.0$. In lieu of using ACI 318-19 17.9.5 or ACI 318-14 17.7.6, as applicable, values of c_{ac} provided in Tables 1A, 1B and 4 of this report must be used.

4.1.12 Lightweight Concrete: For the use of Titen HD® products in lightweight concrete, the modification factor λ_a equal to 0.8λ is applied to all values of $\sqrt{f_c'}$ affecting N_n and V_n.

For ACI 318-19 (2021 IBC) and ACI 318-14 (2018 and 2015 IBC), λ must be determined in accordance with the corresponding version of ACI 318.

For Titen HD® products installed in the soffit of sand-lightweight concrete-filled steel deck and floor and roof assemblies, further reduction of the pullout values provided in this report is not required.

4.2 Allowable Stress Design (ASD):

4.2.1 General: Where design values for use with allowable stress design (working stress design) load combinations in accordance with Section 1605.1 of the 2021 IBC or Section 1605.3 of the 2018 and 2015 IBC are required, these are calculated using Eq-2 and Eq-3 as follows:

$$T_{allowable,ASD} = \frac{\phi N_n}{\alpha} \qquad \text{(Eq-2)}$$

and

$$V_{allowable,ASD} = \frac{\phi V_n}{\alpha} \qquad \text{(Eq-3)}$$

where:

$T_{allowable,ASD}$ = Allowable tension load, (lbf, N)

$V_{allowable,ASD}$ = Allowable shear load, (lbf, N)

ϕN_n = Lowest design strength of an anchor or anchor group in tension as determined in accordance with ACI 318 (-19 and -14) Chapter 17, as applicable, and 2021, 2018 and 2015 IBC Section 1905.1.8, as applicable, and Section 4.1 of this report, as applicable (lbf or N).

ϕV_n = Lowest design strength of an anchor or anchor group in shear as determined in accordance with ACI 318 (-19 and -14) Chapter 17, as applicable, and 2021, 2018 and 2015 IBC Section 1905.1.8, as applicable, and Section 4.1 of this report, as applicable (lbf or N).

α = A conversion factor calculated as a weighted average of the load factors for the controlling load combination. In addition, α must include all applicable factors to account for nonductile failure modes and required over-strength.

The requirements for member thickness, edge distance and spacing, described in Tables 1A, 1B and 4 of this report, must apply.

4.2.2 Interaction of Tensile and Shear Forces: The interaction of tension and shear loads must be consistent with ACI 318-19 17.8 or ACI 318-14 17.6, as applicable, as follows:

If $T_{applied} \leq 0.2T_{allowable,ASD}$, then the full allowable strength in shear, $V_{allowable,ASD}$, is to be used.

If $V_{applied} \leq 0.2V_{allowable,ASD}$, then the full allowable strength in tension, $T_{allowable,ASD}$, is to beused.

For all other cases:

$$\frac{T_{applied}}{T_{allowable,ASD}} + \frac{V_{applied}}{V_{allowable,ASD}} \leq 1.2 \qquad \text{(Eq-4)}$$

4.3 Installation:

Installation parameters are provided in Tables 1A, 1B and 4, and Figures 2A, 2B, 2C, 3, 4 and 5. Titen HD® product locations must comply with this report, and the plans and specifications approved by the code official. The Titen HD® products must be installed in accordance with the manufacturer's published instructions and this report.

Anchors must be installed by drilling a pilot hole into the concrete using a handheld electro-pneumatic rotary hammer drill with a carbide-tipped drill bit conforming to ANSI B212.15-1994. The pilot hole must have the same nominal diameter as the nominal diameter of the anchor. For the $^1/_4$-inch (6.4 mm) Titen HD® Screw Anchors and $^1/_4$-inch (6.4mm) shank diameter Rod Hangers, the hole is drilled to the specified nominal embedment depth plus $^1/_8$ inch (3.2 mm). For the $^3/_8$-inch (9.5 mm) Titen HD® Screw Anchors, $^3/_8$-inch (9.5 mm) shank diameter Rod Hangers and $^3/_8$-inch (9.5 mm) shank diameter Rod Couplers, the hole is drilled to the specified nominal embedment depth plus $^1/_4$ inch (6.4 mm). For the $^1/_2$-inch (12.7 mm) Titen HD® Screw Anchors and $^1/_2$-inch (12.7 mm) shank diameter Rod Couplers, the hole is drilled to the specified nominal embedment depth plus $^1/_2$ inch (12.7 mm). For $^5/_8$- and $^3/_4$-inch (15.9 and 19.1 mm) Titen HD® Screw Anchors, the hole is drilled to the specified nominal embedment depth plus $^1/_2$ inch (12.7 mm).

Dust and debris in the hole must be removed by using oil-free compressed air. The Titen HD® products must be installed into the hole to the specified embedment depth using a socket wrench or powered impact wrench. The maximum installation torque and maximum impact wrench torque rating requirements for the Titen HD® products are detailed in Tables 1A and 1B. Titen HD® products may be loosened by a maximum one turn and reinstalled with a socket wrench or powered impact wrench to facilitate fixture attachment or realignment.

The underside of the heads of hex-washer head and flat-washer head Titen HD® Screw Anchors must bear directly on the attached fixture. The top of the countersunk head Titen HD® Screw Anchors must be flush with the surface of the attached fixture.

The underside of the head of Titen HD® Rod Hangers must be in direct contact with the concrete surface.

Titen HD® Rod Couplers must be installed through wood members. The underside of the head of Rod Couplers must bear directly on the wood surface.

For Titen HD® Screw Anchors installed in the topside of normalweight or sand-lightweight concrete over profile steel deck floor and roof assemblies, installation parameters are provided in Table 4 and Figure 5 of this report.

For Titen HD® Screw Anchors and Rod Hangers installed in the lower flute or upper flute of the soffit of sand-lightweight or normalweight concrete over profile steel deck floor and roof assemblies, the hole diameter in the steel deck must not exceed the diameter of the hole in the concrete by more than $^1/_8$ inch (3.2 mm).

4.4 Special Inspection:

Periodic special inspection is required in accordance with Section 1705.1.1 and Table 1705.3 of the 2021, 2018 or 2015 IBC. The special inspector must make periodic inspections during anchor installation to verify anchor type, anchor dimensions, hole cleaning procedure, embedment depth, concrete type, concrete compressive strength, concrete member thickness, hole dimensions, anchor spacing, edge distance, installation torque, maximum impact wrench torque rating, and adherence to the manufacturer's published installation instructions. The special inspector must be present as often as required in accordance with the "statement of special inspection."

Under the IBC, additional requirements as set forth in Section 1705, 1706 or 1707 must be observed, where applicable.

5.0 CONDITIONS OF USE:

The Simpson Strong-Tie® Titen HD® products described in this report are suitable alternatives to what is specified in those codes listed in Section 1.0 of this report, subject to the following conditions:

5.1 The Titen HD® products must be installed in accordance with the manufacturer's published installation instructions and this report. In case of conflict, this report governs.

5.2 Titen HD® product sizes, dimensions and minimum embedment depths are set forth in the tables of this report.

5.3 The Titen HD® Screw Anchors and Rod Hangers must be installed in accordance with Section 4.3 of this report in cracked or uncracked normalweight and lightweight concrete having a compressive strength, f'_c, of 2,500 psi to 8,500 psi (17.2 MPa to 58.6 MPa); or into the soffit of cracked or uncracked sand-lightweight or normalweight concrete over profile steel deck having a minimum specified compressive strength, f'_c, of 3,000 psi (20.7 MPa).

5.4 The $^1/_4$-inch-diameter (6.4 mm) and $^3/_8$-inch-diameter (9.5 mm) Titen HD® Screw Anchors may be installed in the topside of cracked and uncracked normalweight or sand-lightweight concrete-filled steel deck having a minimum specified compressive strength, f'_c, of 2,500 psi to 8,500 psi (17.2 MPa to 58.6 MPa).

5.5 The Titen HD® Rod Couplers must be installed in accordance with Section 4.3 of this report in cracked or uncracked normalweight and lightweight concrete having a compressive strength, f'_c, of 2,500 psi to 8,500 psi (17.2 MPa to 58.6 MPa).

5.6 The value of f'c used for calculation purposes must not exceed 8,000 psi (55.2 MPa).

5.7 The concrete must have attained its minimum design strength prior to the installation of the anchors.

5.8 Strength design values must be established in accordance with Section 4.1 of this report.

5.9 Allowable stress design values must be established in accordance with Section 4.2 of this report.

5.10 Titen HD® product spacing(s) and edge distance(s), as well as minimum concrete thickness, must comply with Tables 1, 4 and 5, and Figures 3, 4 and 5 of this report.

5.11 Reported values for the Titen HD® Rod Hangers and Rod Couplers do not consider the strength of the internally threaded element, which must be verified by the design professional.

5.12 The $^1/_4$-, $^3/_8$- and $^1/_2$-inch-diameter (6.4, 9.5 and 12.7 mm) Titen HD® Screw Anchors must be installed in the topside of cracked or uncracked normalweight or sand-lightweight concrete-filled steel deck in accordance with the requirements of Table 4 and as shown in Figure 5.

The $^1/_4$-, $^3/_8$-, and $^1/_2$-inch-diameter (6.4, 9.5 and 12.7 mm) Titen HD® Screw Anchors, and the $^1/_4$- and $^3/_8$-inch (6.4 and 9.5 mm) shank diameter Titen HD® Rod Hangers must be installed through the lower flute of concrete-filled steel deck in accordance with Table 5 and as shown in Figure 3 for the $^3/_8$- and $^1/_2$-inch-diameter (9.5 and 12.7 mm) Titen HD® Screw Anchors and the $^3/_8$-inch-diameter (9.5 mm) Titen HD® Rod Hanger; and in Figure 4 for the $^1/_4$-inch-diameter (6.4 mm) Titen HD® Screw Anchors and Rod Hangers.

The $^1/_4$-, $^3/_8$-, and $^1/_2$-inch-diameter (6.4, 9.5 and 12.7 mm) Titen HD® Screw Anchors and $^1/_4$-inch (6.4 mm) shank diameter Titen HD® Rod Hanger must be installed through the upper flute of concrete-filled steel deck in accordance with Table 5 and as shown in Figure 4 for the $^1/_4$-inch-diameter (6.4 mm) Titen HD®

Screw Anchor and Rod Hanger; and in Figure 3 for the $^3/_8$- and $^1/_2$-inch-diameter (9.5 and 12.7 mm) Titen HD® Screw Anchors.

5.13 Prior to installation, calculations and details demonstrating compliance with this report must be submitted to the code official. The calculations and details must be prepared, signed, and sealed by a registered design professional where required by the statutes of the jurisdiction in which the project is to be constructed.

5.14 Since an ICC-ES acceptance criteria for evaluating data to determine the performance of anchors subjected to fatigue or shock loading is unavailable at this time, the use of the Titen HD® products under such conditions is beyond the scope of this report.

5.15 Titen HD® products may be installed in regions of concrete where cracking has occurred or where analysis indicates cracking may occur ($f_t > f_r$), subject to the conditions of this report.

5.16 Titen HD® products may be used to resist short-term loading due to wind or seismic forces in locations designated as Seismic Design Categories A through F under the IBC, subject to the conditions of this report.

5.17 Titen HD® products are not permitted to support fire-resistance-rated construction. Where not otherwise prohibited by the code, Titen HD® products are permitted for installation in fire-resistance-rated construction provided that at least one of the following conditions is fulfilled:

- Anchors are used to resist wind or seismic forces only.
- Anchors that support gravity load–bearing structural elements are within a fire-resistance-rated envelope or a fire-resistance-rated membrane, are protected by approved fire-resistance-rated materials or have been evaluated for resistance to fire exposure in accordance with recognized standards.
- Anchors are used to support nonstructural elements.

5.18 Titen HD® products have been evaluated for reliability against brittle failure and found to be not significantly sensitive to stress-induced hydrogen embrittlement.

5.19 Use of Titen HD® products with electrodeposited zinc coating in accordance with ASTM B633 as described in Sections 3.1, 3.2 and 3.3 is limited to dry, interior locations.

5.20 Titen HD® products with mechanically galvanized coating in accordance with ASTM B695 as described in Section 3.1 are permitted for exterior exposure or damp environments, and for interior locations where anchors are in contact with preservative-treated and fire-retardant-treated wood.

5.21 Special inspection must be provided in accordance with Section 4.4.

5.22 The Titen HD® products are manufactured by Simpson Strong-Tie® Company, Inc., under an approved quality-control program with inspections by ICC-ES or by a properly accredited inspection agency that has a contractual relationship with ICC-ES.

6.0 EVIDENCE SUBMITTED

Data in accordance with the ICC-ES Acceptance Criteria for Mechanical Anchors in Concrete Elements (AC193), dated October 2017, editorially revised December 2020, including an optional suitability test for seismic tension and shear; profile steel deck soffit tests; mechanical properties tests; calculations; and quality-control documentation.

7.0 IDENTIFICATION

7.1 The ICC-ES mark of conformity, electronic labeling, or the evaluation report number (ICC-ES ESR-2713) along with the name, registered trademark, or registered logo of the report holder must be included in the product label.

7.2 Product labeling shall include the name of the report holder or listee, and the ICC-ES mark of conformity. The listing or evaluation report number (ICC-ES ESR-2713) may be used in lieu of the mark of conformity. The Titen HD® product packaging is marked with the Simpson Strong-Tie® Company name; product name (Titen HD®); type (Screw Anchor, Rod Hanger or Rod Coupler); Screw Anchor diameter and length, or Rod Hanger or Rod Coupler shank diameter and internal thread diameter, as applicable; catalog number corresponding to Table 6 of this report; and the evaluation report number (ESR-2713). In addition, the ≠ symbol and the anchor length (in inches) are stamped on the head of each Screw Anchor.

7.3 The report holder's contact information is as follows:

SIMPSON STRONG-TIE COMPANY INC.
5956 WEST LAS POSITAS BOULEVARD
PLEASANTON, CALIFORNIA 94588
(800) 925-5099
www.strongtie.com

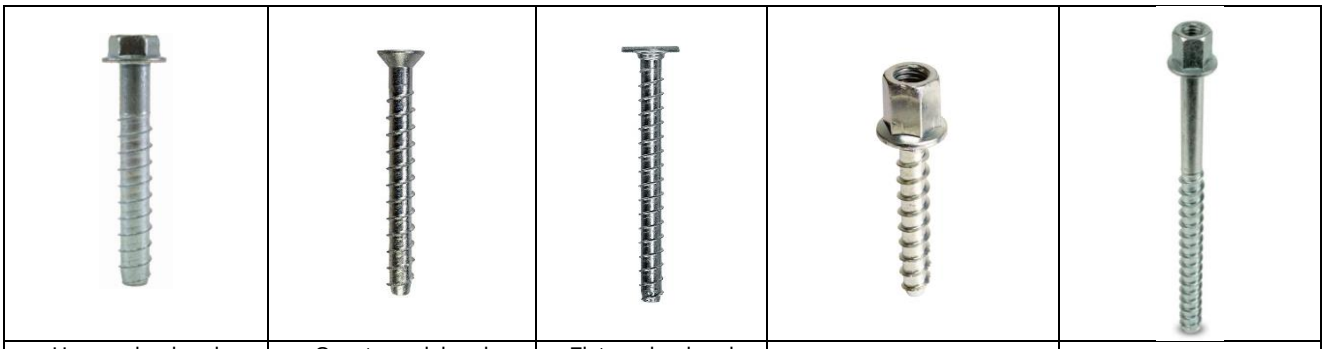

Hex-washer head	Countersunk head	Flat-washer head		
FIGURE 1A—TITEN HD® SCREW ANCHOR			**FIGURE 1B—TITEN HD® ROD HANGER**	**FIGURE 1C—TITEN HD® ROD COUPLER**

TABLE 1A—TITEN HD® SCREW ANCHOR INSTALLATION INFORMATION AND ANCHOR DATA[1]

Characteristic	Symbol	Units	Titen HD Screw Anchor Nominal Anchor Diameter (inch)										
			1/4		3/8		1/2		5/8		3/4		
Installation Information													
Nominal Diameter	d_a	in.	1/4		3/8		1/2		5/8		3/4		
Drill Bit Diameter	d_{bit}	in.	1/4		3/8		1/2		5/8		3/4		
Minimum Baseplate Clearance Hole Diameter[2]	d_c	in.	3/8		1/2		5/8		3/4		7/8		
Maximum Installation Torque[3]	$T_{inst,max}$	ft-lbf	24		50		65		100		150		
Maximum Impact WrenchTorque Rating	$T_{impact,max}$	ft-lbf	125		150		340		340		385		
Minimum Hole Depth	h_{hole}	in.	1 3/4	2 5/8	2 3/4	3 1/2	3 3/4	4 1/2	4 1/2	6	4 1/2	6	6 3/4
Nominal Embedment Depth	h_{nom}	in.	1 5/8	2 1/2	2 1/2	3 1/4	3 1/4	4	4	5 1/2	4	5 1/2	6 1/4
Effective Embedment Depth	h_{ef}	in.	1.19	1.94	1.77	2.40	2.35	2.99	2.97	4.24	2.94	4.22	4.86
Critical Edge Distance	c_{ac}	in.	3	6	2 11/16	3 5/8	3 9/16	4 1/2	4 1/2	6 3/8	6	6 3/8	7 5/16
Minimum Edge Distance	c_{min}	in.	1 1/2	1 1/2	1 3/4						1 3/4		
Minimum Spacing	s_{min}	in.	1 1/2	1 1/2	3						2 3/4	3	
Minimum Concrete Thickness	h_{min}	in.	3 1/4	3 1/2	4	5	5	6 1/4	6	8 1/2	6	8 3/4	10
Anchor Data													
Yield Strength	f_{ya}	psi	100,000		97,000								
Tensile Strength	f_{uta}	psi	125,000		110,000								
Minimum Tensile & Shear Stress Area	A_{se}[4]	in²	0.042		0.099		0.183		0.276		0.414		
Axial Stiffness in Service Load Range - Uncracked Concrete	β_{uncr}	lb/in.	202,000		672,000								
Axial Stiffness in Service Load Range - Cracked Concrete	β_{cr}	lb/in.	173,000		345,000								

For **SI**: 1 inch = 25.4 mm, 1 ft-lbf = 1.356 N-m, 1 psi = 6.89 kPa, 1 in² = 645 mm², 1 lb/in = 0.175 N/mm.

[1]The information presented in this table is to be used in conjunction with the design criteria of ACI 318-19 Chapter 17 or ACI 318-14 Chapter 17, as applicable.
[2]The clearance must comply with applicable code requirements for the connected element.
[3]$T_{inst,max}$ applies to installations using a calibrated torque wrench.
[4]$A_{se,N} = A_{se,V} = A_{se}$

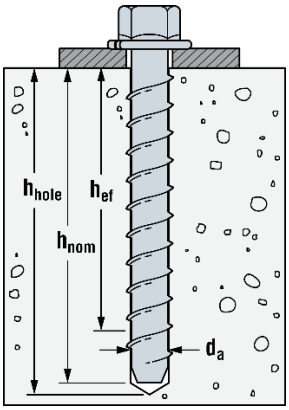

FIGURE 2A—TITEN HD® SCREW ANCHOR INSTALLATION

TABLE 1B—TITEN HD® ROD HANGER AND ROD COUPLER INSTALLATION INFORMATION AND ANCHOR DATA[1]

Characteristic	Symbol	Units	Titen HD Rod Coupler Model No.		Titen HD Rod Hanger Model No.		
			THD37634RC	THD50934RC	THDB25158RH THDB37158RH	THD37212RH THD10212RH	THD50234RH
Installation Information							
Nominal Diameter	d_a	in.	$^3/_8$	$^1/_2$	$^1/_4$	$^3/_8$	$^3/_8$
Drill Bit Diameter	d_{bit}	in.	$^3/_8$	$^1/_2$	$^1/_4$	$^3/_8$	$^3/_8$
Internal Thread Diameter	d_{rh}	-	$^3/_8$	$^1/_2$	¼-inch or $^3/_8$-inch	$^3/_8$-inch or 10mm	½-inch
Maximum Installation Torque[2]	$T_{inst,max}$	ft-lbf	50	65	24	50	50
Maximum Impact WrenchTorque Rating	$T_{impact,max}$	ft-lbf	150	340	125	150	150
Minimum Hole Depth	h_{hole}	in.	$3^1/_2$	$4^1/_2$	$1^3/_4$	$2^3/_4$	3
Nominal Embedment Depth	h_{nom}	in.	$3^1/_4$	4	$1^5/_8$	$2^1/_2$	$2^1/_2$
Effective Embedment Depth	h_{ef}	in.	2.40	2.99	1.19	1.77	1.77
Critical Edge Distance	c_{ac}	in.	$3^5/_8$	$4^1/_2$	3	$2^{11}/_{16}$	$2^{11}/_{16}$
Minimum Edge Distance	c_{min}	in.	$1^3/_4$		$1^1/_2$	$1^3/_4$	
Minimum Spacing	s_{min}	in.	3		$1^1/_2$	3	
Minimum Concrete Thickness	h_{min}	in.	5	$6^1/_4$	$3^1/_4$	4	$4^1/_4$
Anchor Data							
Yield Strength	f_{ya}	psi	97,000		100,000	97,000	
Tensile Strength	f_{uta}	psi	110,000		125,000	110,000	
Minimum Tensile Stress Area	A_{se}[3]	in^2	0.099	0.183	0.042	0.099	0.099
Axial Stiffness in Service Load Range - Uncracked Concrete	β_{uncr}	lb/in.	672,000		202,000	672,000	
Axial Stiffness in Service Load Range - Cracked Concrete	β_{cr}	lb/in.	345,000		173,000	345,000	

For **SI**: 1 inch = 25.4 mm, 1 ft-lbf = 1.356 N-m, 1 psi = 6.89 kPa, 1 in^2 = 645 mm^2, 1 lb/in = 0.175 N/mm.

[1]The information presented in this table is to be used in conjunction with the design criteria of ACI 318-19 Chapter 17 or ACI 318-14 Chapter 17, as applicable.
[2]$T_{inst,max}$ applies to installations using a calibrated torque wrench.
[3]$A_{se,N} = A_{se}$

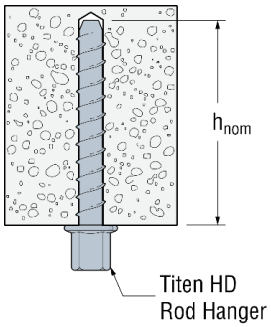

FIGURE 2B—TITEN HD® ROD HANGER INSTALLATION

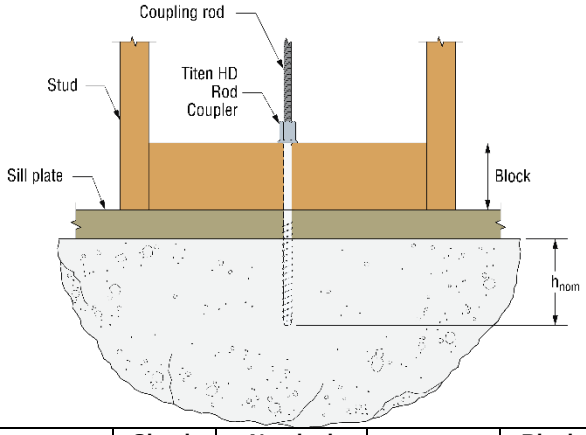

Model	Shank Length (in.)	Nominal Embedment Depth (in.)	Sill Plate Thickness	Block Height (in.)
THD37634RC	$6^3/_4$	$3^1/_4$	2x	2
			3x	1
THD50934RC	$9^3/_4$	4	2x	$4^1/_4$
			3x	$3^1/_4$

REQUIRED BLOCK HEIGHT

FIGURE 2C—TITEN HD® ROD COUPLER INSTALLATION

TABLE 2A—TITEN HD® SCREW ANCHOR CHARACTERISTIC TENSION STRENGTH DESIGN VALUES[1]

Characteristic	Symbol	Units	Titen HD Screw Anchor Nominal Anchor Diameter (inch)										
			1/4		3/8		1/2		5/8		3/4		
Anchor Category	1, 2 or 3	-	1										
Nominal Embedment Depth	h_{nom}	in.	1 5/8	2 1/2	2 1/2	3 1/4	3 1/4	4	4	5 1/2	4	5 1/2	6 1/4
Steel Strength in Tension (ACI 318-19 17.6.1 or ACI 318-14 17.4.1)													
Tension Resistance of Steel	N_{sa}	lbf	5,195		10,890		20,130		30,360		45,540		
Strength Reduction Factor - Steel Failure[2]	ϕ_{sa}	-	0.65										
Concrete Breakout Strength in Tension (ACI 318-19 17.6.2 or ACI 318-14 17.4.2)													
Effective Embedment Depth	h_{ef}	in.	1.19	1.94	1.77	2.40	2.35	2.99	2.97	4.24	2.94	4.22	4.86
Critical Edge Distance	c_{ac}	in.	3	6	2 11/16	3 5/8	3 9/16	4 1/2	4 1/2	6 3/8	6	6 3/8	7 5/16
Effectiveness Factor - Uncracked Concrete	k_{uncr}	-	30	24							27	24	
Effectiveness Factor - Cracked Concrete	k_{cr}	-	17										
Modification factor	$\Psi_{c,N}$	-	1.0										
Strength Reduction Factor - Concrete Breakout Failure[2]	ϕ_{cb}	-	0.65										
Pullout Strength in Tension (ACI 318-19 17.6.3 or ACI 318-14 17.4.3)													
Pullout Resistance Uncracked Concrete (f'_c=2,500 psi)	$N_{p,uncr}$	lbf	N/A[3]	N/A[3]	2,700[4]	N/A[3]	N/A[3]	N/A[3]	N/A[3]	9,810[4]	N/A[3]	N/A[3]	N/A[3]
Pullout Resistance Cracked Concrete (f'_c=2,500 psi)	$N_{p,cr}$	lbf	N/A[3]	1,905[4]	1,235[4]	2,700[4]	N/A[3]	N/A[3]	3,040[4]	5,570[4]	N/A[3]	6,070[4]	7,195[4]
Strength Reduction Factor - Pullout Failure[2]	ϕ_p	-	0.65										
Tension Strength for Seismic Applications (ACI 318-19 17.10.3 or ACI 318-14 17.2.3.3)													
Nominal Pullout Strength for Seismic Loads (f'_c=2,500 psi)	$N_{p,eq}$	lbf	N/A[3]	1,905[4]	1,235[4]	2,700[4]	N/A[3]	N/A[3]	3,040[4]	5,570[4]	3,840[4]	6,070[4]	7,195[4]
Strength Reduction Factor for Pullout Failure[2]	ϕ_{eq}	-	0.65										

For **SI**: 1 inch = 25.4 mm, 1 ft-lbf = 1.356 N-m, 1 psi = 6.89 kPa, 1 in^2 = 645 mm^2, 1 lb/in = 0.175 N/mm.

[1]The information presented in this table is to be used in conjunction with the design criteria of ACI 318-19 Chapter 17 or ACI 318-14 Chapter 17, as applicable.
[2]The strength reduction factor applies when the load combinations from the IBC or ACI 318 are used and the requirements of ACI 318-19 17.5.3 or ACI 318-14 17.3.3, as applicable, are met.
[3]As described in this report, N/A denotes that pullout resistance does not govern and does not need to be considered.
[4]The characteristic pullout resistance for greater compressive strengths may be increased by multiplying the tabular value by $(f'_c/2.500)^{0.5}$.

TABLE 2B—TITEN HD® ROD HANGER AND ROD COUPLER CHARACTERISTIC TENSION STRENGTH DESIGN VALUES[1]

Characteristic	Symbol	Units	Titen HD Rod Coupler Model No.		Titen HD Rod Hanger Model No.		
			THD37634RC	THD50934RC	THDB25158RH THDB37158RH	THD37212RH THD10212RH	THD50234RH
Anchor Category	1, 2 or 3	-	1				
Nominal Embedment Depth	h_{nom}	in.	$3^1/_4$	4	$1^5/_8$	$2^1/_2$	$2^1/_2$
Steel Strength in Tension (ACI 318-19 17.6.1 or ACI 318-14 17.4.1)							
Tension Resistance of Steel	N_{sa}	lbf	10,890	20,130	5,195	10,890	10,890
Strength Reduction Factor - Steel Failure[2]	ϕ_{sa}	-	0.65				
Concrete Breakout Strength in Tension (ACI 318-19 17.6.2 or ACI 318-14 17.4.2)							
Effective Embedment Depth	h_{ef}	in.	2.40	2.99	1.19	1.77	1.77
Critical Edge Distance	c_{ac}	in.	$3^5/_8$	$4^1/_2$	3	$2^{11}/_{16}$	$2^{11}/_{16}$
Effectiveness Factor - Uncracked Concrete	k_{uncr}	-	24		30	24	
Effectiveness Factor - Cracked Concrete	k_{cr}	-	17				
Modification factor	$\Psi_{c,N}$	-	1.0				
Strength Reduction Factor - Concrete Breakout Failure[2]	ϕ_{cb}	-	0.65				
Pullout Strength in Tension (ACI 318-19 17.6.3 or ACI 318-14 17.4.3)							
Pullout Resistance Uncracked Concrete (f'_c=2,500 psi)	$N_{p,uncr}$	lbf	N/A[3]	N/A[3]	N/A[3]	2,025[4]	2,025[4]
Pullout Resistance Cracked Concrete (f'_c=2,500 psi)	$N_{p,cr}$	lbf	2,700[4]	N/A[3]	N/A[3]	1,235[4]	1,235[4]
Strength Reduction Factor - Pullout Failure[2]	ϕ_p	-	0.65				
Tension Strength for Seismic Applications (ACI 318-19 17.10.3 or ACI 318-14 17.2.3.3)							
Nominal Pullout Strength for Seismic Loads (f'_c=2,500 psi)	$N_{p,eq}$	lbf	2,700[4]	N/A[3]	N/A[3]	1,235[4]	1,235[4]
Strength Reduction Factor for Pullout Failure[2]	ϕ_{eq}	-	0.65				

For **SI**: 1 inch = 25.4 mm, 1 ft-lbf = 1.356 N-m, 1 psi = 6.89 kPa, 1 in^2 = 645 mm^2, 1 lb/in = 0.175 N/mm.

[1]The information presented in this table is to be used in conjunction with the design criteria of ACI 318-19 Chapter 17 or ACI 318-14 Chapter 17, as applicable.
[2]The strength reduction factor applies when the load combinations from the IBC or ACI 318 are used and the requirements of ACI 318-19 17.5.3 or ACI 318-14 17.3.3, as applicable, are met.
[3]As described in this report, N/A denotes that pullout resistance does not govern and does not need to be considered.
[4]The characteristic pullout resistance for greater compressive strengths may be increased by multiplying the tabular value by $(f'_c/2.500)^{0.5}$.

TABLE 3—TITEN HD® SCREW ANCHOR CHARACTERISTIC SHEAR STRENGTH DESIGN VALUES[1]

Characteristic	Symbol	Units	Nominal Anchor Diameter (inch)										
			1/4		3/8		1/2		5/8		3/4		
Anchor Category	1, 2 or 3	-	1										
Nominal Embedment Depth	h_{nom}	in.	1 5/8	2 1/2	2 1/2	3 1/4	3 1/4	4	4	5 1/2	4	5 1/2	6 1/4
Steel Strength in Shear (ACI 318-19 17.7.1 or ACI 318-14 17.5.1)													
Shear Resistance of Steel	V_{sa}	Lbf	2,020		4,460		7,455		10,000		14,950	16,840	
Strength Reduction Factor - Steel Failure[2]	ϕ_{sa}	-	0.60										
Concrete Breakout Strength in Shear (ACI 318-19 17.7.2 orACI 318-14 17.5.2)													
Nominal Diameter	d_a	in.	0.25		0.375		0.500		0.625		0.750		
Load Bearing Length of Anchor in Shear	l_e	in.	1.19	1.94	1.77	2.40	2.35	2.99	2.97	4.24	2.94	4.22	4.86
Strength Reduction Factor - Concrete Breakout Failure[2]	ϕ_{cb}	-	0.70										
Concrete Pryout Strength in Shear (ACI 318-19 17.7.3 or ACI 318-14 17.5.3)													
Coefficient for Pryout Strength	k_{cp}	-	1.0					2.0					
Strength Reduction Factor - Concrete Pryout Failure[2]	ϕ_{cp}	-	0.70										
Shear Strength for Seismic Applications (ACI 318-19 17.10.3 or ACI 318-14 17.2.3.3)													
Shear Resistance of Single Anchor for Seismic Loads (f'_c=2,500 psi)	$V_{sa,eq}$	Lbf	1,695		2,855		4,790		8,000		9,350		
Strength Reduction Factor - Steel Failure[2]	ϕ_{eq}	-	0.60										

For **SI**: 1 inch = 25.4mm, 1 lbf = 4.45N.

[1]The information presented in this table is to be used in conjunction with the design criteria of ACI 318-19 Chapter 17 or ACI 318-14 Chapter 17, as applicable.
[2] The strength reduction factor applies when the load combinations from the IBC or ACI 318 are used and the requirements of ACI 318-19 17.5.3 or ACI 318-14 17.3.3, as applicable, are met.

TABLE 4—TITEN HD® SCREW ANCHOR INSTALLATION INFORMATION IN THE TOPSIDE OF CONCRETE-FILLED PROFILE STEEL DECK FLOOR AND ROOF ASSEMBLIES[1,2,3,4]

Design Information	Symbol	Units	Nominal Anchor Diameter (inch)			
			1/4	3/8	1/2	
			Figure 5	Figure 5	Figure 5	Figure 5
Nominal Embedment Depth	h_{nom}	in.	1 5/8	2 1/2	3 1/4	4
Effective Embedment Depth	h_{ef}	in.	1.19	1.77	2.35	2.99
Minimum Concrete Thickness[5]	$h_{min,deck}$	in.	2 1/2	3 1/4	4 1/2	4 1/2
Critical Edge Distance	$c_{ac,deck,top}$	in.	3 3/4	7 1/4	9	9
Minimum Edge Distance	$c_{min,deck,top}$	in.	3 1/2	3	2 1/2	2 1/2
Minimum Spacing	$s_{min,deck,top}$	in.	3 1/2	3	3	3

For **SI**: 1 inch = 25.4mm, 1 lbf = 4.45N.

[1]Installation must comply with Sections 3.5, 4.1.10, 4.3, 5.4, and 5.12, and Figure 5 of this report.
[2]Design capacity must be based on calculations according to values in Tables 2A and 3 of this report.
[3]Minimum flute depth (distance from top of flute to bottom of flute) is 1½-inch, see Figure 5.
[4]Steel deck thickness must be minimum 20 gauge.
[5]Minimum concrete thickness ($h_{min,deck}$) refers to concrete thickness above upper flute, see Figure 5.

TABLE 5—TITEN HD® SCREW ANCHOR AND ROD HANGER CHARACTERISTIC TENSION AND SHEAR DESIGN VALUES FOR THE SOFFIT OF CONCRETE-FILLED PROFILE STEEL DECK ASSEMBLIES 1,5 and 6

Characteristic	Symbol	Units	Titen HD Screw Anchor Nominal Anchor Diameter (inch) / Titen HD Rod Hanger Model No.													
			Lower Flute									Upper Flute				
			Figure 4			Figure 3						Figure 4			Figure 3	
			$^1/_4$		THDB25158RH THDB37158RH	$^3/_8$		$^1/_2$		THD37212RH THD10212RH	THD50234RH	$^1/_4$		THDB25158RH THDB37158RH	$^3/_8$	$^1/_2$
Minimum Hole Depth	h_{hole}	in.	$1^3/_4$	$2^5/_8$	$1^3/_4$	$2^1/_8$	$2^3/_4$	$2^1/_2$	4	$2^3/_4$	3	$1^3/_4$	$2^5/_8$	$1^3/_4$	$2^1/_8$	$2^1/_2$
Nominal Embedment Depth	h_{nom}	in.	$1^5/_8$	$2^1/_2$	$1^5/_8$	$1^7/_8$	$2^1/_2$	2	$3^1/_2$	$2^1/_2$	$2^1/_2$	$1^5/_8$	$2^1/_2$	$1^5/_8$	$1^7/_8$	2
Effective Embedment Depth	h_{ef}	in.	1.19	1.94	1.19	1.23	1.77	1.29	2.56	1.77	1.77	1.19	1.94	1.19	1.23	1.29
Pullout Resistance, Cracked Concrete[2,7]	$N_{p,deck,cr}$	lbf	420	535	420	375	870	905	2040	870	870	655	1195	655	500	1700
Pullout Resistance, Uncracked Concrete[3,7]	$N_{p,deck,uncr}$	lbf	995	1275	995	825	1905	1295	2910	1430	1430	1555	2850	1555	1095	2430
Steel Strength in Shear[4]	$V_{sa,deck}$	lbf	1335	1745	N/A	2240	2395	2435	4430	N/A	N/A	2010	2420	N/A	4180	7145
Steel Strength in Shear, Seismic[4]	$V_{sa,deck,eq}$	lbf	870	1135	N/A	1434	1533	1565	2846	N/A	N/A	1305	1575	N/A	2676	4591

For **SI**: 1 inch = 25.4mm, 1 lbf = 4.45N.

[1]Installation must comply with Sections 3.5, 4.1.10, 4.3, 5.4, and 5.12, and Figures 3 and 4 of this report.
[2]The values listed must be used in accordance with Section 4.1.4 and 4.1.8.2 of this report.
[3]The values listed must be used in accordance with Section 4.1.4 of this report.
[4]The values listed must be used in accordance with Section 4.1.5 and 4.1.8.3 of this report.
[5]The values for ϕ_p (reduction factor for pullout strength) can be found in Table 2A and 2B and the value for ϕ_{sa} (reduction factor for steel strength in shear) can be found in Table 3.
[6]The minimum anchor spacing along the flute must be the greater of $3h_{ef}$ or 1.5 times the flute width in accordance with Section 4.1.10 of this report.
[7]The characteristic pull-out resistance for greater concrete compressive strengths must be increased by multiplying the tabular value by $(f'_c / 3{,}000 \text{ psi})^{0.5}$.

TABLE 6—TITEN HD® SCREW ANCHOR AND ROD HANGER IDENTIFICATION INFORMATION

Anchor Size	Head Type	Catalog Number
$^1/_4$"	Hex-Washer	THDB25xxxH
	Countersunk	THDB25xxxCS
$^3/_8$"	Hex-Washer	THD37xxxH
	Hex-Washer – Mechanically Galvanized	THD37xxxHMG
	Countersunk	THD37xxxCS
$^1/_2$"	Hex-Washer	THD50xxxH
	Hex-Washer – Mechanically Galvanized	THD50xxxHMG
	Flat-Washer	THD50xxxWH
	Flat-Washer – Mechanically Galvanized	THD50xxxWHMG
$^5/_8$"	Hex-Washer	THDB62xxxH
	Hex-Washer – Mechanically Galvanized	THDB62xxxHMG
	Flat-Washer	THDB62xxxWH
	Flat-Washer – Mechanically Galvanized	THDB62xxxWHMG
$^3/_4$"	Hex-Washer	THD75xxxH
	Hex-Washer – Mechanically Galvanized	THD75xxxHMG
$^1/_4$" shank diameter / $^1/_4$" Rod Hanger	Rod Hanger	THDB25158RH
$^1/_4$" shank diameter / $^3/_8$" Rod Hanger	Rod Hanger	THDB37158RH
$^3/_8$" shank diameter / $^3/_8$" Rod Hanger	Rod Hanger	THD37212RH
$^3/_8$" shank diameter / $^1/_2$" Rod Hanger	Rod Hanger	THD50234RH
$^3/_8$" shank diameter / 10 mm Rod Hanger	Rod Hanger	THD10212RH
$^3/_8$" shank diameter / $^3/_8$" Rod Coupler	Rod Coupler	THD37634RC
$^1/_2$" shank diameter / $^1/_2$" Rod Coupler	Rod Coupler	THD50934RC

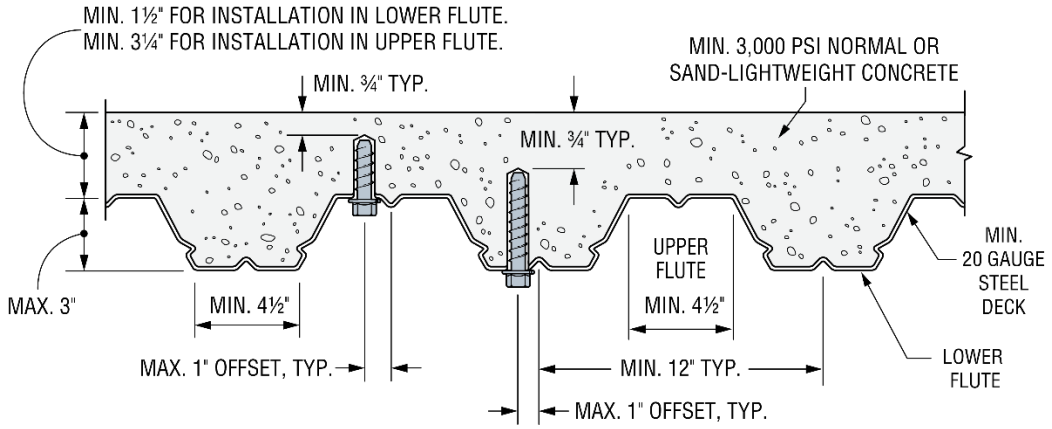

FIGURE 3—INSTALLATION OF $^3/_8$-INCH AND $^1/_2$-INCH SHANK DIAMETER SCREW ANCHORS AND ROD HANGERS INTO THE SOFFIT OF CONCRETE-FILLED PROFILE STEEL DECK FLOOR AND ROOF ASSEMBLIES (1 in = 25.4 mm)

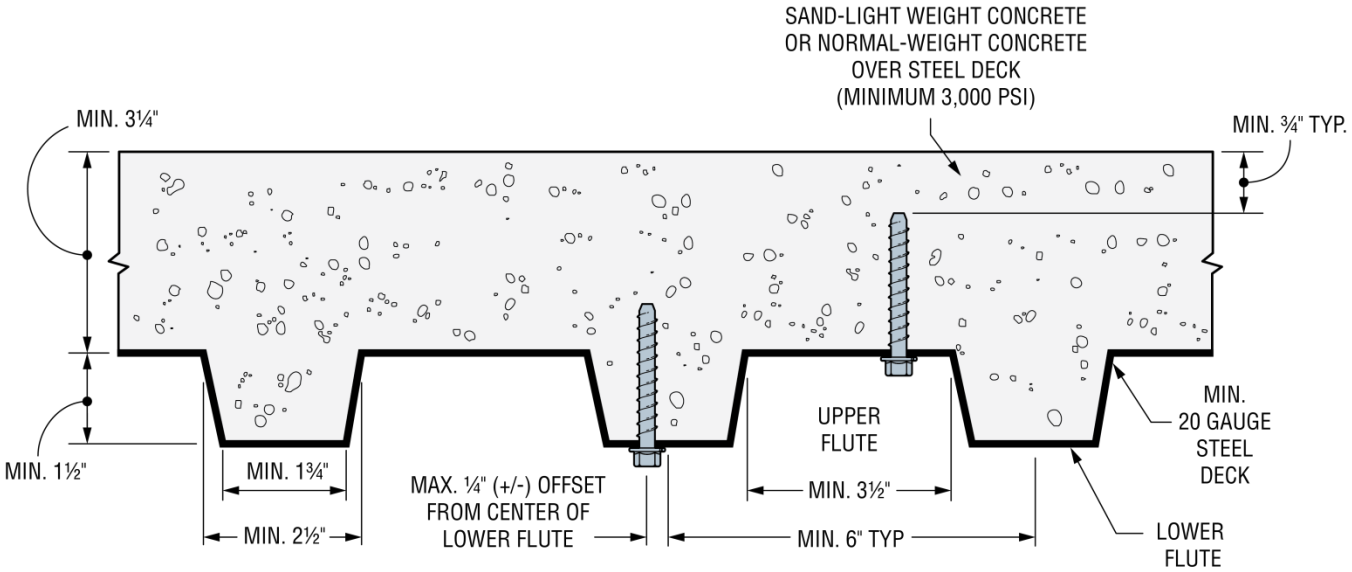

FIGURE 4—INSTALLATION OF $^1/_4$-INCH SHANK DIAMETER SCREW ANCHORS AND ROD HANGERS INTO THE SOFFIT OF CONCRETE-FILLED PROFILE STEEL DECK FLOOR AND ROOF ASSEMBLIES
(1 in = 25.4 mm)

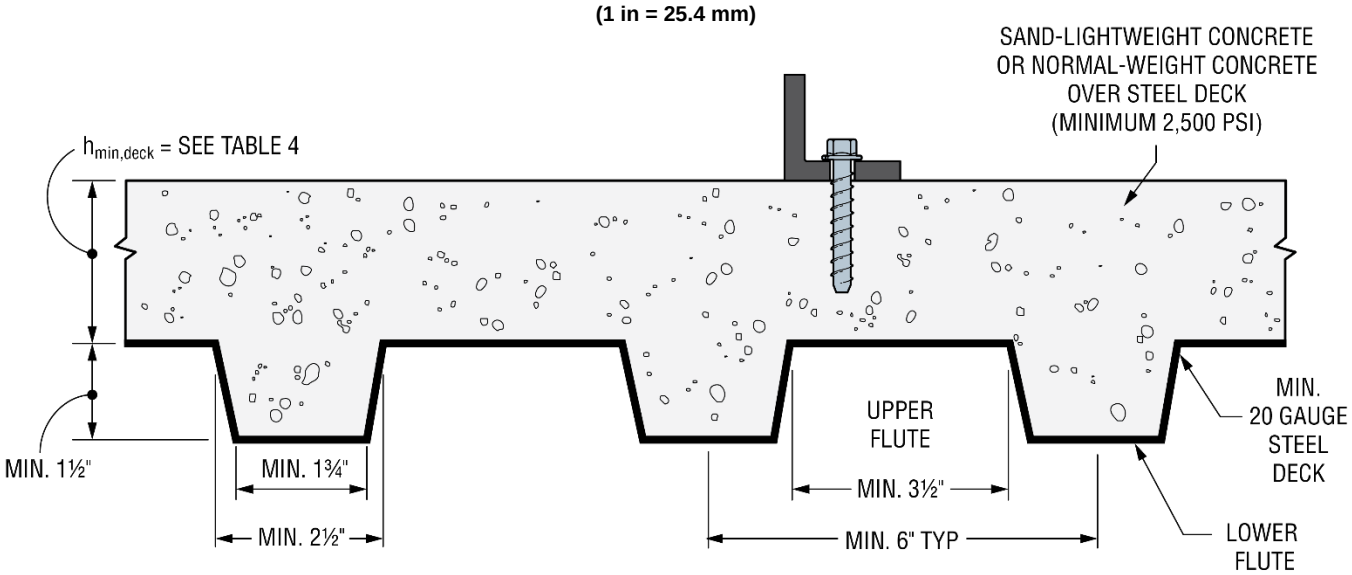

FIGURE 5—INSTALLATION OF $^1/_4$-INCH, $^3/_8$-INCH AND $^1/_2$-INCH SHANK DIAMETER SCREW ANCHORS IN THE TOPSIDE OF CONCRETE-FILLED PROFILE STEEL DECK FLOOR AND ROOF ASSEMBLIES
(1 in = 25.4 mm)

DIVISION: 03 00 00—CONCRETE
Section: 03 16 00—Concrete Anchors

DIVISION: 05 00 00—METALS
Section: 05 05 19—Post-Installed Concrete Anchors

REPORT HOLDER:

SIMPSON STRONG-TIE COMPANY INC.

EVALUATION SUBJECT:

TITEN HD® SCREW ANCHOR, TITEN HD® ROD HANGER AND TITEN HD® ROD COUPLER FOR CRACKED AND UNCRACKED CONCRETE

1.0 REPORT PURPOSE AND SCOPE

Purpose:

The purpose of this evaluation report supplement is to indicate that the TITEN HD® Screw Anchor, TITEN HD® Rod Hanger and TITEN HD® Rod Coupler for cracked and uncracked concrete, described in ICC-ES evaluation report ESR-2713, have also been evaluated for compliance with the codes noted below as adopted by the Los Angeles Department of Building and Safety (LADBS).

Applicable code editions:

- 2023 *City of Los Angeles Building Code* (LABC)
- 2023 *City of Los Angeles Residential Code* (LARC)

2.0 CONCLUSIONS

The TITEN HD® Screw Anchor, TITEN HD® Rod Hanger and TITEN HD® Rod Coupler for cracked and uncracked concrete, described in Sections 2.0 through 7.0 of the evaluation report ESR-2713, comply with the LABC Chapter 19, and the LARC, and are subject to the conditions of use described in this supplement.

3.0 CONDITIONS OF USE

The TITEN HD® Screw Anchor, TITEN HD® Rod Hanger and TITEN HD® Rod Coupler for cracked and uncracked concrete described in this evaluation report supplement must comply with all of the following conditions:

- All applicable sections in the evaluation report ESR-2713.
- The design, installation, conditions of use and identification of the anchors are in accordance with the 2021 *International Building Code®* (IBC) provisions noted in the evaluation report ESR-2713.
- The design, installation and inspection are in accordance with additional requirements of LABC Chapters 16 and 17 as applicable.
- Under the LARC, an engineered design in accordance with LARC Section R301.1.3 must be submitted.
- The allowable strength and design strength values listed in the evaluation report and tables are for the connection of the anchors to the concrete. The connection between the anchors and the connected members shall be checked for capacity (which may govern).
- For use in wall anchorage assemblies to flexible diaphragm applications, anchors shall be designed per the requirements of City of Los Angeles Information Bulletin P/BC 2020-071.

This supplement expires concurrently with the evaluation report, reissued September 2023.

ICC-ES Evaluation Reports are not to be construed as representing aesthetics or any other attributes not specifically addressed, nor are they to be construed as an endorsement of the subject of the report or a recommendation for its use. There is no warranty by ICC Evaluation Service, LLC, express or implied, as to any finding or other matter in this report, or as to any product covered by the report.

Copyright © 2023 ICC Evaluation Service, LLC. All rights reserved.

DIVISION: 03 00 00—CONCRETE
Section: 03 16 00—Concrete Anchors

DIVISION: 05 00 00—METALS
Section: 05 05 19—Post-Installed Concrete Anchors

REPORT HOLDER:

SIMPSON STRONG-TIE COMPANY INC.

EVALUATION SUBJECT:

TITEN HD® SCREW ANCHOR, TITEN HD® ROD HANGER AND TITEN HD® ROD COUPLER FOR CRACKED AND UNCRACKED CONCRETE

1.0 REPORT PURPOSE AND SCOPE

Purpose:

The purpose of this evaluation report supplement is to indicate that the Simpson Strong-Tie® Titen HD® Screw Anchor, Titen HD® Rod Hanger and Titen HD® Rod Coupler for cracked and uncracked concrete, described in ICC-ES evaluation report ESR-2713, have also been evaluated for compliance with the codes noted below.

Applicable code editions:

- 2023 *Florida Building Code—Building*
- 2023 *Florida Building Code—Residential*

2.0 CONCLUSIONS

The Simpson Strong-Tie® Titen HD® Screw Anchor, Titen HD® Rod Hanger and Titen HD® Rod Coupler for cracked and uncracked concrete, described in Sections 2.0 through 7.0 of ICC-ES evaluation report ESR-2713, comply with the *Florida Building Code—Building* or the *Florida Building Code—Residential.* The design requirements must be determined in accordance with the *Florida Building Code—Building* or the *Florida Building Code—Residential,* as applicable. The installation requirements noted in ICC-ES evaluation report ESR-2713 for the 2021 *International Building Code®* meet the requirements of the *Florida Building Code—Building* or the *Florida Building Code—Residential,* as applicable.

Use of the Simpson Strong-Tie® Titen HD® Screw Anchor, Titen HD® Rod Hanger and Titen HD® Rod Coupler for cracked and uncracked concrete, have also been found to be in compliance with the High-Velocity Hurricane Zone provisions of the *Florida Building Code—Building* and the *Florida Building Code—Residential* with the following condition:

a) For anchorage to wood members, the connection subject to uplift must be designed for no less than 700 pounds (3114 N).

For products falling under Florida Rule 61G20-3, verification that the report holder's quality assurance program is audited by a quality assurance entity approved by the Florida Building Commission for the type of inspections being conducted is the responsibility of an approved validation entity (or the code official when the report holder does not possess an approval by the Commission).

This supplement expires concurrently with the evaluation report, reissued September 2023.

ICC-ES Evaluation Reports are not to be construed as representing aesthetics or any other attributes not specifically addressed, nor are they to be construed as an endorsement of the subject of the report or a recommendation for its use. There is no warranty by ICC Evaluation Service, LLC, express or implied, as to any finding or other matter in this report, or as to any product covered by the report.

Copyright © 2023 ICC Evaluation Service, LLC. All rights reserved.