ICC-ES Evaluation Report
ESR-3050

Reissued August 2023

This report is subject to renewal August 2024.

DIVISION: 03 00 00—CONCRETE
Section: 03 16 00—Concrete Anchors

DIVISION: 06 00 00—WOOD, PLASTICS AND COMPOSITES
Section: 06 05 23—Wood, Plastic, and Composite Fastenings

REPORT HOLDER:

SIMPSON STRONG-TIE COMPANY INC.

EVALUATION SUBJECT:

SIMPSON STRONG-TIE EMBEDDED COLUMN BASES IN CONCRETE

1.0 EVALUATION SCOPE

Compliance with the following codes:

- 2021, 2018, 2015, 2012 and 2009 *International Building Code®* (IBC)
- 2021 2018, 2015, 2012 and 2009 *International Residential Code®* (IRC)

For evaluation for compliance with codes adopted by the Los Angeles Department of Building and Safety (LADBS), see ESR-3050 LABC and LARC Supplement.

Property evaluated:

Structural

2.0 USES

Simpson Strong-Tie embedded column bases in concrete are used to connect vertical wood post members to concrete foundations (normalweight concrete) to resist uplift, lateral and download forces. The column bases may be used in buildings resisting wind and seismic forces, assigned to Seismic Design Categories (SDC's) A through F in accordance with IBC Section 1604.8.1 (Sections 1604.8.1 and 1604.9 of the 2015, 2012 and 2009 IBC). The embedded column bases in concrete meet the intent of cast-in-place anchors described in IBC Section 1901.3 (2012 IBC Sections 1908 and 1909; 2009 IBC Sections 1911 and 1912), for resisting tension forces, when the embedded column bases in concrete are used to connect wood post construction members to concrete foundations or foundation walls, as applicable. For structures regulated under the IRC, the embedded column bases in concrete may be used where an engineered design is submitted in accordance with Section R301.1.3, and may be used where approved by the code official in accordance with Section R104.11.

3.0 DESCRIPTION

3.1 General:

3.1.1 CBSQ-SDS2 Series Embedded Column Bases: The CBSQ-SDS2 series embedded column bases consist of two pieces of cold-formed, galvanized sheet steel: one piece of steel that is a U-shaped strap and a separate piece of steel that forms a 1-inch (25.4 mm) stand-off base. The stand-off base fits over the vertical straps and is temporarily held in place by crimped steel, with the pieces installed together as a single unit. The base is ultimately held in place by the vertical weight of the installed post. The stand-off base is manufactured from No. 12 gage steel. The strap portion is No. 10 gage steel for the CBSQ44, 46 and 66, and No. 8 gage steel for the CBSQ86 and 88. The stand-off base is attached to the U-shaped strap just above the marked embedded height. The portion of the U-shaped strap that is below the base has a varying embedment depth depending on the CBSQ type, and the portion that is above the base has round holes that are used to accept SDS screws in order to fasten to the wood post. Table 1 lists model numbers, material thickness, dimensions, SDS screw size and quantities, and allowable loads. Figure 1 shows the embedded column base and the typical installation with minimum concrete cover dimensions.

3.1.2 EPB Series Embedded Column Bases: The EPB44A embedded column base consists of a single piece of cold-formed, No. 14 gage galvanized sheet steel. The embedded portion of the column base consists of a headed type section that allows for engagement into the concrete to an embedment depth of 6 inches (152 mm). The portion above the embedment line provides for a standoff clearance above the concrete, and the two vertical straps are used to engage with the wood post. The EPB44, EPB46 and EPB66 consist of a single U-shaped, No. 12 gage, hot rolled, gray paint–coated sheet steel base and strap, along with weld-attached $1^{1}/_{16}$-inch-diameter-by-8-inch-long (26.9 mm by 203 mm) or 12-inch long (305 mm) steel pipe for concrete embedment. Table 2 lists model numbers, dimensions, fastener size and quantities, and allowable loads. Figure 2 shows the embedded column bases and the typical installation with minimum concrete cover dimensions.

ICC-ES Evaluation Reports are not to be construed as representing aesthetics or any other attributes not specifically addressed, nor are they to be construed as an endorsement of the subject of the report or a recommendation for its use. There is no warranty by ICC Evaluation Service, LLC, express or implied, as to any finding or other matter in this report, or as to any product covered by the report.

Copyright © 2023 ICC Evaluation Service, LLC. All rights reserved.

3.1.3 PB Series Embedded Column Bases: The PB series embedded column bases consist of a single piece of cold-formed, No. 12 gage galvanized sheet steel that has two bent fork–shaped prongs that embed down into the concrete at one end to a dimension of $3^1/_4$ inches (82 mm), and two 5-inch-tall vertical straps for attachment to the wood post at the other end. The two vertical straps can accept nails or machine bolts. Table 3 lists model numbers, dimensions, nail and bolt size and quantities, and allowable loads. Figure 3 shows the embedded column base and the typical installation with minimum concrete cover dimensions.

3.1.4 PBS Series Embedded Column Bases: The PBS series embedded column bases consist of two pieces of cold-formed, galvanized sheet steel: one piece of steel that is a bent bottom U-shaped strap, and a separate piece of steel that forms a 1-inch (25.4 mm) stand-off base. The stand-off base fits over the vertical straps and is temporarily held in place by crimped steel with the pieces installed together as a single unit. The base is ultimately held in place by the vertical weight of the installed post. The stand-off base is manufactured from No. 12 gage steel. The strap portion is No. 14 gage steel for the PBS44A and PBS46, and No. 12 gage steel for the PBS66. The stand-off base is attached to the U-shaped strap just above the marked embedded height. The portion of the U-shaped strap that is above the base has fastener holes that are used to accept either nails or machine bolts in order to fasten to the wood post. Table 4 lists model numbers, material thickness, dimensions, nail and bolt size, and quantities and allowable loads. Figure 4 shows the embedded column base and the typical installation with minimum concrete cover dimensions.

3.1.5 EPS Embedded Column Bases: The EPS4Z embedded column bases consist of a single piece of cold-formed, No. 14 gage G185 galvanized sheet steel that is U-shaped, with the lower portion of the shape embedded down into the concrete to a dimension of $1^{11}/_{16}$ inches (43 mm), and the two 7–inch-long vertical straps extended up for attachment to the wood post. The two vertical straps accept 10d-by-$1^1/_2$ nails. Table 5 lists the model number, dimensions, nail size and quantity and allowable loads. Figure 5 shows the embedded column base and the typical installation with minimum concrete cover dimensions.

3.1.6 CB Series Embedded Column Bases: The CB series embedded column bases consist of two pieces of G90 galvanized sheet steel. Each has one piece of steel that is a U-shaped strap, and a separate piece of steel that forms the base. The base and strap are both manufactured from No. 8 gage steel. The base is attached to the U-shaped strap just above the marked embedded height prior to installation. The portion of the U-shaped strap that is below the base is designated for an embedment noted in Table 6, and the portion of the strap that is above the base has round holes that are used to accept either machine bolts or nails as also described in Table 6 in order to fasten to the wood post. Table 6 lists model numbers, material thickness, dimensions, machine bolt information and allowable loads. Figure 6 shows the embedded column base and the typical installation with minimum concrete cover dimensions.

3.1.7 PPBZ Series Porch Post Bases: The PPBZ series embedded column bases consist of two pieces of cold-formed, galvanized sheet steel: one piece of steel that is a bent bottom U-shaped strap with a flat square base, and a separate piece of steel that forms a 1-inch (25.4 mm) stand-off base. The stand-off base fits over the vertical straps and is temporarily held in place by crimped steel, with the pieces installed together as a single unit. The base is ultimately held in place by the vertical weight of the installed post. Both the strap portion and the stand-off base are manufactured from No. 12 gage steel. The stand-off base is attached to the U-shaped strap just above the marked embedded height. The portion of the U-shaped strap that is above the base has fastener holes that are used to accept nails in order to fasten to the wood post. Table 7 lists model numbers, dimensions, nail information and allowable loads. Figure 7 shows the embedded column base and the typical installation with minimum concrete cover dimensions.

3.1.8 MPBZ Moment Post Bases: The MPBZ moment post base consists of a single piece of cold-formed, No. 12 gage sheet steel with G185 zinc coating. The MPBZ moment post base has an overlapping sleeve design which encapsulates the post and has holes for SDS screws. The bottom portion of the MPBZ is embedded in concrete, with concrete filling the interior of the connector to the embedment height. Built-in stand-off tabs provide the required 1-inch (25.4 mm) post stand-off above the marked embedded height. The MPBZ is placed prior to concrete pour using embedment level indicators and form board attachment holes. Upon concrete curing, wood post or column is placed on tabs 1 inch (25.4 mm) above top of concrete. The wood post or column is fastened to the MPBZ using SDS screws which are supplied with the part. Table 8 lists the model numbers, dimensions, fastener information and allowable loads. Figures 8A and 8B show the post base and the typical installation with minimum concrete cover dimensions.

3.2 Materials:

3.2.1 Connector Steel: The steel material used for the embedded column bases described in this report varies depending on the specific column base type. The CBSQ-SDS2, EPB44A, PB, PBS, CB, PPBZ and MPBZ column bases are manufactured from galvanized steel complying with ASTM A653, SS designation, Grade 33, with a minimum yield strength, F_y, of 33,000 psi (227 MPa), a tensile elongation greater than 14 percent and a minimum tensile strength, F_u, of 45,000 psi (310 MPa). The CBSQ-SDS2, EPB44A, PB, PBS and LCB post bases have a minimum G90 zinc coating and the PPBZ and MPBZ have a minimum G185 zinc coating. Both G90 and G185 are designations in accordance with ASTM A653. The EPB44, EPB46 and EPB66 are manufactured from hot-rolled steel complying with ASTM A1011, SS designation, 8-inch (203 mm) Grade 33, with a minimum yield strength, Fy, of 33,000 psi (227 MPa) and a minimum tensile strength, Fu, of 52,000 psi (358 MPa). These column bases have a minimum gray paint or G90 zinc coating designation in accordance with ASTM A653. The EPS4Z is manufactured from galvanized steel complying with ASTM A653, SS designation, Grade 33, with a minimum yield strength, F_y, of 33,000 psi (227 MPa), a tensile elongation greater than 14 percent and a minimum tensile strength, F_u, of 45,000 psi (310 MPa). These post bases have a minimum G185 zinc coating designation in accordance with ASTM A653. Connector steel specifications are summarized in Table 9. The lumber treater's recommendations or recommendations of Simpson Strong-Tie Company, Inc., regarding minimum corrosion resistance and connection capacities of connectors used with the specific proprietary preservative-treated or fire-retardant-treated lumber, must be followed.

The embedded column bases in concrete described in Section 3.1 in this report have the following minimum base-metal thicknesses:

GAGE NO.	BASE-METAL THICKNESS (in.)
8	0.1668
10	0.1342
12	0.1026
14	0.0721

For **SI:** 1 inch = 25.4 mm.

3.2.2 Wood: Wood members with which the embedded column bases in concrete are used must be either sawn lumber or engineered lumber recognized in an ICC-ES evaluation report. The maximum moisture content is 19 percent for sawn lumber, and 16 percent for engineered lumber, except as noted in Section 4.1. The minimum assigned specific gravity, or equivalent specific gravity for engineered lumber, must be 0.50, such as for Douglas fir–larch (DF-L). The ASD values noted in Tables 1 through 8 of this evaluation report are based on the use of No. 2 DF-L, or higher grade, as noted in table footnotes.

3.2.3 Fasteners: Nails for wood installation must be bright or hot-dipped galvanized carbon steel nails complying with ASTM F1667, as referenced in Section 2303.6 of the IBC. Alternatively, nails of other materials or finishes may be used when they are recognized in an ICC-ES evaluation report as having bending yield strength and withdrawal capacity equal to or better than those of a bright carbon steel nail of the same nominal diameter. The following table provides the minimum dimensions and bending yield strength (F_{yb}) for the nails used with the embedded column bases in concrete described in this report, as well as requirements for screws and bolts.

FASTENER	SHANK DIAMETER (inch)	LENGTH (inches)	F_{yb} (psi)
16d Common	0.162	$3^1/_2$	90,000
10d x $1^1/_2$	0.148	$1^1/_2$	90,000
10d Common	0.148	3	90,000
SDS $^1/_4$ x 2 Screw (SDS25200) SDS $^1/_4$ x 2 $^1/_2$ Screw (SDS25212) SDS ¼ x 3 Screw (SDS25300)	See Section 3.2.3.1		
$^1/_2$" Machine Bolt	0.500	(as required)	See Section 3.2.3.2
$^5/_8$" Machine Bolt	0.625	(as required)	See Section 3.2.3.2

For **SI:** 1 inch = 25.4 mm, 1 psi = 6.895 kPa.

Nails used in contact with preservative-treated or fire-retardant-treated wood must be hot-dipped galvanized carbon steel nails. Screws and bolts used in contact with preservative-treated or fire-retardant-treated lumber must comply with Section 2304.10.6 of the 2021 IBC (Section 2304.10.5 of the 2018 and 2015 IBC, or Section 2304.9.5 of the 2012 and 2009 IBC) or Section R317.3 of the IRC, as applicable. Alternatively, nails or screws of other materials or finishes may be used when they are recognized in an ICC-ES evaluation report for use in the applicable treated lumber.

The lumber treater's recommendations or recommendations of Simpson Strong-Tie Company, Inc., on minimum corrosion resistance and connection capacities of fasteners used with the specific proprietary preservative-treated or fire-retardant treated lumber, must be followed.

3.2.3.1 Strong-Drive® SDS Screws: Fasteners used with the column bases described in Table 1 must be Simpson Strong-Tie SDS screws recognized in ESR-2236. SDS screws used in contact with preservative-treated or fire-retardant-treated lumber must, as a minimum, comply with ESR-2236. The lumber treater or Simpson Strong-Tie should be contacted for recommendations on minimum corrosion resistance and connection capacities of fasteners used with the specific proprietary preservative-treated or fire-retardant-treated lumber.

3.2.3.2 Machine Bolts: As a minimum, machine bolts must be of ASTM A307 steel.

3.2.4 Concrete: Concrete must be normalweight concrete complying with the provisions of IBC Chapter 19 or IRC Section R402.2, as applicable, and must have a minimum specified concrete compressive strength, f'_c of 2500 psi (17.2 MPa) at 28 days, or as required by IBC Section 1904 (2009 IBC Section 1905.1.1).

4.0 DESIGN AND INSTALLATION

4.1 Design:

The allowable loads shown in the tables of this report are based on Allowable Stress Design (ASD) and include the load duration factor, C_D, corresponding with the applicable loads in accordance with the *National Design Specification® for Wood Construction* (NDS), where applicable. The allowable loads are shown for installation conditions where minimum concrete cover dimensions are considered per the figures associated with the respective load tables. The allowable load values based on uncracked concrete are for use where analysis indicates no concrete cracking at service (unfactored) load levels.

The allowable loads listed in Tables 1 through 8 apply to embedded column bases in concrete connected to wood used under dry conditions and where sustained temperatures are 100°F (37.8°C) or less. If installation is in wood that has sustained exposure that exceeds these conditions, the allowable loads determined in accordance with this report must be adjusted by the temperature factor, C_t, specified in the NDS. When the embedded column bases in concrete are installed to wood having a moisture content greater than 19 percent (16 percent for engineered wood products), or where wet service is expected, the allowable loads in Tables 1 through 7 must be adjusted by the wet service factor, C_M, specified in the NDS for dowel-type fasteners. Limitations for wet service for the MPBZ are provided in Table 8 Footnote 11.

IBC Section 1613.1 contains an exception that permits detached one- and two-family dwellings assigned to Seismic Design Category (SDC) A, B or C to be exempt from the seismic design provisions of IBC Section 1613. When this is the case, as determined by the code official, the allowable wind (or SDC A and B) loads assigned to the column bases may be used.

4.2 Installation:

The embedded column bases in concrete must be installed in accordance with this evaluation report and the manufacturer's published installation instructions. In the event of a conflict between this report and the manufacturer's published installation instructions, the more restrictive governs. Column base locations must comply with this report and the plans and specifications approved

by the code official. For buildings regulated under the IRC and conventional light-frame construction regulated under IBC Section 2308, the embedded column base in concrete may be used to attach vertical wood post members to normal-weight concrete foundations or foundation walls. Predrilling of holes for fasteners installed in the vertical member is not required except when the column fastener is a machine bolt. In that case, a drilled hole with a diameter that is at least $^1/_{32}$" and no more than a maximum of $^1/_{16}$" larger than the bolt diameter, per 2018 and 2015 NDS Section 12.1.3.2 (Section 11.1.3.2 of the 2012 and 2005 NDS for the 2012, 2009 and 2006 IBC), shall be continuous through the member.

Embedded column bases in concrete must be installed with the minimum embedment depth noted in Table 1 through 8 and figures of this report. Any portion of the post base left exposed must be protected against corrosion by providing weather protection complying with IBC Section 1402.2 (Section 1403.2 of the 2015, 2012 and 2009 IBC) or IRC Section R703.

The tabulated allowable loads of the embedded column bases in concrete do not require the use of added steel rebar reinforcing, except for Table 8, for which design values are provided for applications in reinforced and non-reinforced concrete.

4.3 Special Inspection:

4.3.1 For the purpose of determining special inspection requirements, connectors may be considered to be special cases in accordance with Section 1705.1.1 of the IBC (Section 1704.15 of the 2009 IBC). Periodic special inspection shall be provided except where otherwise required or excepted by specific provisions of the IBC.

4.3.2 For installations complying with the IRC, special inspections are not required.

5.0 CONDITIONS OF USE

The Simpson Strong-Tie embedded column bases in concrete described in this report comply with, or are suitable alternatives to what is specified in, those codes listed in Section 1.0 of this report, subject to the following conditions:

5.1 The embedded column bases in concrete must be manufactured, identified and installed in accordance with this report and the manufacturer's published installation instructions. A copy of the instructions must be available at the jobsite at all times during installation. In the event of conflict between this report and the manufacturer's published installation instructions, the more restrictive governs.

5.2 Calculations and details showing compliance with this report must be submitted to the code official. The calculations must be prepared by a registered design professional where required by the statutes of the jurisdiction in which the project is to be constructed.

5.3 Adjustment factors noted in Section 4.1 and the applicable codes must be considered, where applicable.

5.4 Connected wood members, fasteners and concrete must comply with Sections 3.2.2, 3.2.3 and 3.2.4 of this report.

5.5 Use of connectors with preservative- or fire-retardant-treated lumber must be in accordance with Section 3.2.1 of this report. Use of fasteners with preservative- or fire-retardant-treated lumber must be in accordance with Section 3.2.3 of this report.

5.6 Embedded column bases in concrete may be installed in cracked or uncracked concrete. Cracking occurs in regions of concrete where analysis indicates cracking may occur ($f_t > f_r$), subject to the conditions of this report.

5.7 Special Inspection must be provided in accordance with Section 4.3 of this report.

5.8 Concrete protection for the steel column bases, as a minimum, must be as noted for steel reinforcement in the IBC Section 1808.8.2, unless noted otherwise in this report.

5.9 The supporting concrete member must be designed by others to resist applied force(s) imparted by the connector.

5.10 Embedded column bases and porch post bases are manufactured under a quality-control program with inspections by ICC-ES.

6.0 EVIDENCE SUBMITTED

Data in accordance with the ICC-ES Acceptance Criteria for Cast-in-place Cold-formed Steel Connectors in Concrete for Light-frame Construction (AC398), dated February 2020 (editorially revised December 2020).

7.0 IDENTIFICATION

7.1 The Simpson Strong-Tie embedded column bases in concrete described in this report are identified with a die-stamped label indicating the name of the manufacturer (Simpson Strong-Tie), the model number, and the number of an index evaluation report (ESR-2523) that is used as an identifier for the products recognized in this report.

7.2 The report holder's contact information is the following:

SIMPSON STRONG-TIE COMPANY INC.
5956 WEST LAS POSITAS BOULEVARD
PLEASANTON, CALIFORNIA 94588
(800) 925-5099
www.strongtie.com

TABLE 1—ALLOWABLE STRESS DESIGN (ASD) LOADS FOR CBSQ COLUMN BASES – 2500 psi CONCRETE[1,2,3,4,5,6,7]

Wind and SDC A & B - Allowable Loads (lbs.)											
Model No.	Nominal Column Size	Material		Dimensions				Simpson Strong-Tie SDS Screws	Uncracked	Cracked	Download[8]
		Base (Ga)	Strap (Ga x Width)	W_1	W_1	D	H		Uplift	Uplift	C_D = 1.0
CBSQ44-SDS2	4x4	12	10 ga x $2^1/_4$	$3^9/_{16}$	$3^1/_2$	$7^1/_8$	$8^3/_8$	14- SDS $^1/_4$"x2"	5,390	4,650	10,975
CBSQ46-SDS2	4x6	12	10 ga x 3	$3^9/_{16}$	$5^5/_{16}$	$7^{13}/_{16}$	$8^{11}/_{16}$	14- SDS $^1/_4$"x2"	5,390	4,650	14,420
CBSQ66-SDS2	6x6	12	10 ga x 3	$5^1/_2$	$5^1/_2$	$6^7/_8$	$8^3/_4$	14- SDS $^1/_4$"x2"	4,375	3,060	14,420
CBSQ86-SDS2	6x8	12	8 ga x 3	$7^1/_2$	$5^3/_8$	$6^1/_8$	$8^{11}/_{16}$	12- SDS $^1/_4$"x2"	3,815	2,670	20,915
CBSQ88-SDS2	8x8	12	8 ga x 3	$7^1/_2$	$7^3/_8$	$6^1/_8$	$8^{11}/_{16}$	12- SDS $^1/_4$"x2"	3,815	2,670	22,225
SDC C-F - Allowable Loads (lbs.)											
Model No.	Nominal Column Size	Material		Dimensions				Simpson Strong-Tie SDS Screws	Uncracked	Cracked	Download[8]
		Base (Ga)	Strap (Ga x Width)	W_1	W_1	D	H		Uplift	Uplift	C_D = 1.0
CBSQ44-SDS2	4x4	12	10 ga x $2^1/_4$	$3^9/_{16}$	$3^1/_2$	$7^1/_8$	$8^3/_8$	14- SDS $^1/_4$"x2"	5,390	4,070	10,975
CBSQ46-SDS2	4x6	12	10 ga x 3	$3^9/_{16}$	$5^5/_{16}$	$7^{13}/_{16}$	$8^{11}/_{16}$	14- SDS $^1/_4$"x2"	5,390	4,070	14,420
CBSQ66-SDS2	6x6	12	10 ga x 3	$5^1/_2$	$5^1/_2$	$6^7/_8$	$8^3/_4$	14- SDS $^1/_4$"x2"	3,830	2,680	14,420
CBSQ86-SDS2	6x8	12	8 ga x 3	$7^1/_2$	$5^3/_8$	$6^1/_8$	$8^{11}/_{16}$	12- SDS $^1/_4$"x2"	3,340	2,335	20,915
CBSQ88-SDS2	8x8	12	8 ga x 3	$7^1/_2$	$7^3/_8$	$6^1/_8$	$8^{11}/_{16}$	12- SDS $^1/_4$"x2"	3,340	2,335	22,225

For **SI:** 1 in = 25.4 mm, 1 lbs = 4.45 N, 1 psi = 6.895 kPa.

[1]See Figure 1 for dimension variables and installation requirements.
[2]Multiply Seismic and Wind ASD load values by 1.43 or 1.67 respectively to obtain LRFD capacities.
[3]In accordance with IBC Section 1613.1, detached one- and two-family dwellings in Seismic Design Category (SDC) C may use "Wind and SDC A & B" allowable loads.
[4]Minimum side cover required is 3". See Figure 1 and Section 5.9 of this report.
[5]Post bases do not provide adequate resistance to prevent members from rotating about the base, therefore, alternative means to provide lateral resistance must be provided.
[6]Download must be reduced where limited by the design capacity of the column. Minimum foundation dimensions are for anchorage only. Foundation design (size and reinforcement) by others. See Section 5.9 and 5.10 of this report.
[7]See Section 3.2.2 for wood post requirements.
[8]Loads may not be increased for short-term loading.

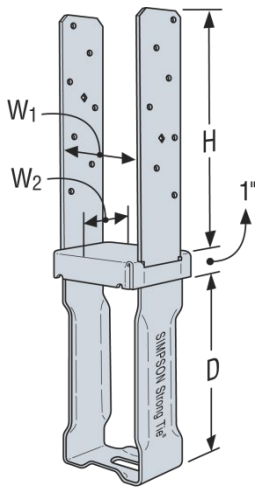

CBSQ-SDS2

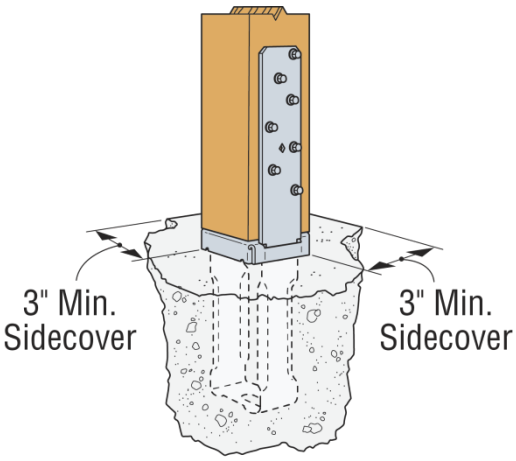

Typical CBSQ-SDS2 Installation

FIGURE 1

TABLE 2—ALLOWABLE STRESS DESIGN (ASD) LOADS FOR EPB COLUMN BASES – 2500 psi CONCRETE[1,2,3,4,5,6,7,8]

Wind and SDC A & B - Allowable Loads (lbs.)							
Model No.	**W**	**L**	**H**	**Nails**	**Uncracked**	**Cracked**	**Download[9] C_D=1.0**
					Uplift	**Uplift**	
EPB44A	$3^{9}/_{16}$	3	$2^{3}/_{8}$	8- 16d	1,075	755	2,670
EPB44	$3^{9}/_{16}$	$3^{1}/_{4}$	$2^{5}/_{16}$	8- 16d	995	695	3,465
EPB46	$5^{1}/_{2}$	$3^{5}/_{16}$	3	12- 16d	995	695	3,465
EPB66	$5^{1}/_{2}$	$5^{1}/_{2}$	3	12- 16d	995	695	3,465
SDC C-F - Allowable Loads (lbs.)							
Model No.	**W**	**L**	**H**	**Nails**	**Uncracked**	**Cracked**	**Download[9] C_D=1.0**
					Uplift	**Uplift**	
EPB44A	$3^{9}/_{16}$	3	$2^{3}/_{8}$	8- 16d	940	660	2,670
EPB44	$3^{9}/_{16}$	$3^{1}/_{4}$	$2^{5}/_{16}$	8- 16d	870	605	3,465
EPB46	$5^{1}/_{2}$	$3^{5}/_{16}$	3	12- 16d	870	605	3,465
EPB66	$5^{1}/_{2}$	$5^{1}/_{2}$	3	12- 16d	870	605	3,465

For **SI**: 1 in = 25.4 mm, 1 lbs = 4.45 N, 1 psi = 6.895 kPa.

[1]See Figure 2 for dimension variables and installation requirements.
[2]Multiply Seismic and Wind ASD load values by 1.43 or 1.67 respectively to obtain LRFD capacities.
[3]In accordance with IBC Section 1613.1, detached one- and two-family dwellings in Seismic Design Category (SDC) C may use “Wind and SDC A & B” allowable loads.
[4]Minimum side cover required is 4" from EPB center line. See Figure 2 and Section 5.9 of this report.
[5]Post bases do not provide adequate resistance to prevent members from rotating about the base, therefore, alternative means to provide lateral resistance must be provided.
[6]Download shall be reduced where limited by the design capacity of the column. Minimum foundation dimensions are for anchorage only. Foundation design (size and reinforcement) by others. See Section 5.9 and 5.10 of this report.
[7]NAILS: 16d = 16d Common = 0.162" dia. X $3^{1}/_{2}$" long.
[8]See Section 3.2.2 for wood post requirements.
[9]Loads may not be increased for short-term loading.

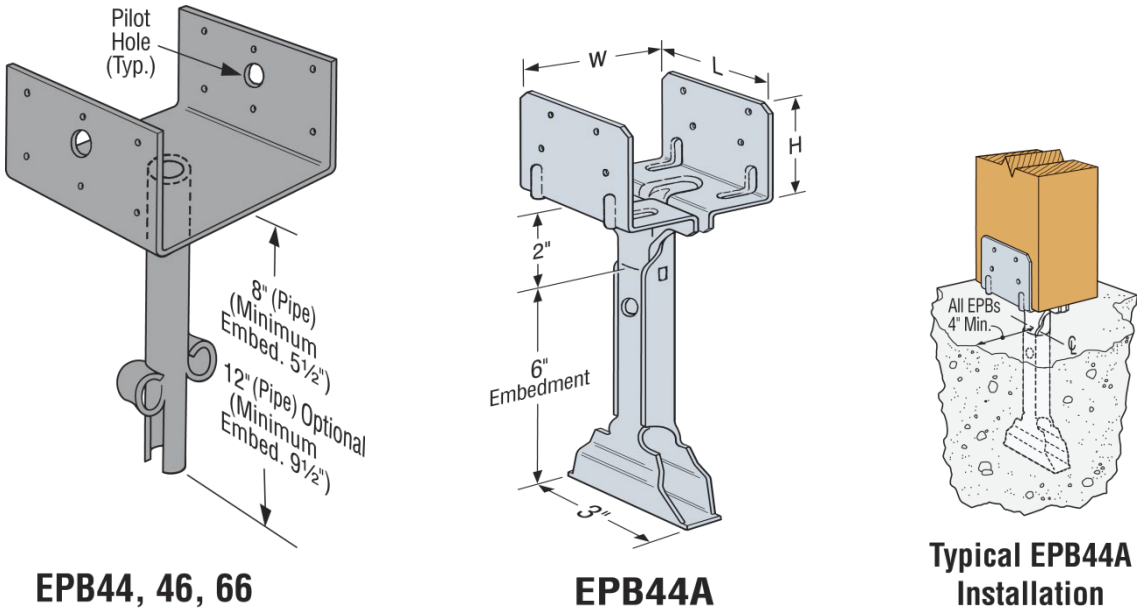

FIGURE 2

TABLE 3—ALLOWABLE STRESS DESIGN (ASD) LOADS FOR PB COLUMN BASES – 2500 psi CONCRETE[1,2,3,4,5,6,7,8,9,10]

Wind and SDC A & B - Allowable Loads (lbs.)							
Model No.	Dimensions		Fasteners		Uncracked	Cracked	Download[11]
	W	L	Nails	Machine Bolts	Uplift	Uplift	
PB44	$3^{9}/_{16}$	$3^{1}/_{4}$	12- 16d	NA	850	850	12,685
PB44R	4	$3^{1}/_{4}$	12- 16d	NA	850	850	12,685
PB46	$5^{1}/_{2}$	$3^{1}/_{4}$	12- 16d	NA	850	850	22,445
PB66	$5^{1}/_{2}$	$5^{1}/_{4}$	12- 16d	Two- $^{1}/_{2}$" Dia.	850	850	25,270
PB66R	6	$5^{1}/_{4}$	12- 16d	Two- $^{1}/_{2}$" Dia.	850	850	25,270
SDC C-F - Allowable Loads (lbs.)							
Model No.	Dimensions		Fasteners		Uncracked	Cracked	Download[11]
	W	L	Nails	Machine Bolts	Uplift	Uplift	
PB44	$3^{9}/_{16}$	$3^{1}/_{4}$	12- 16d	NA	850	850	12,685
PB44R	4	$3^{1}/_{4}$	12- 16d	NA	850	850	12,685
PB46	$5^{1}/_{2}$	$3^{1}/_{4}$	12- 16d	NA	850	850	22,445
PB66	$5^{1}/_{2}$	$5^{1}/_{4}$	12- 16d	Two- $^{1}/_{2}$" Dia.	850	850	25,270
PB66R	6	$5^{1}/_{4}$	12- 16d	Two- $^{1}/_{2}$" Dia.	850	850	25,270

For **SI**: 1 in = 25.4 mm, 1 lbs = 4.45 N, 1 psi = 6.895 kPa.

[1]See Figure 3 for dimension variables and installation requirements.
[2]Multiply Seismic and Wind ASD load values by 1.43 or 1.67 respectively to obtain LRFD capacities.
[3]In accordance with IBC Section 1613.1, detached one- and two-family dwellings in Seismic Design Category (SDC) C may use "Wind and SDC A & B" allowable loads.
[4]Minimum side cover required is 2". See Figure 3 and Section 5.9 of this report.
[5]Post bases do not provide adequate resistance to prevent members from rotating about the base, therefore, alternative means to provide lateral resistance must be provided.
[6]Minimum foundation dimensions are for anchorage only. Foundation design (size and reinforcement) by others. See Section 5.9 and 5.10 of this report.
[7]NAILS: 16d = 16d Common = 0.162" dia. X $3^{1}/_{2}$" long.
[8]See Section 3.2.2 for wood post requirements.
[9]Allowable load values for column bases for which both nail and bolt fasteners are shown are for one fastener type or the other; nails and bolts shall not be used in combination in any single installation.
[10]Loads must be reduced where limited by the capacity of the wood member or supporting concrete, whichever is lower.
[11]Allowable download determined in accordance with NDS Section 3.10.1 using 4x DF-L No. 2 for PB44, PB44R, and PB46 bases and 6x DF-L No. 1 for PB66 and PB66R bases, with C_D = 1.00, and with no incising factor C_i. Download must be adjusted for incised lumber and/or other species and grades.

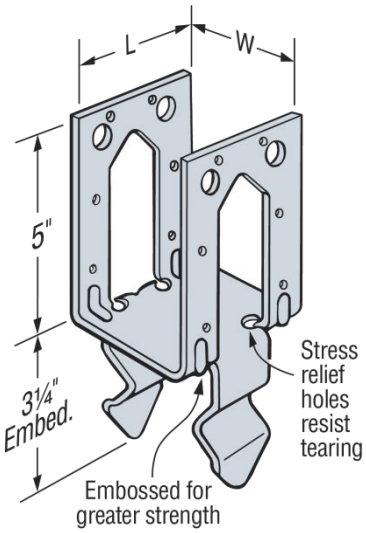

PB

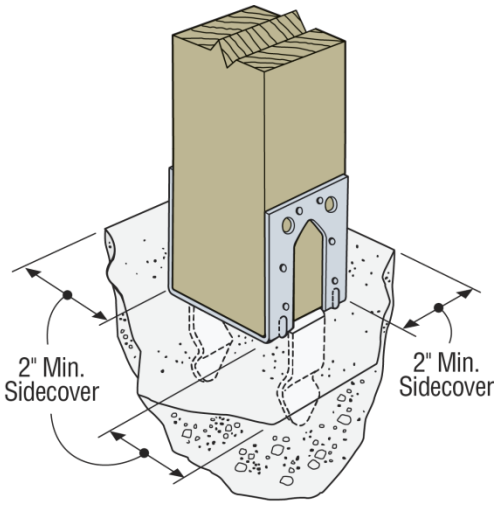

Typical PB Installation

FIGURE 3

TABLE 4—ALLOWABLE STRESS DESIGN (ASD) LOADS FOR PBS COLUMN BASES – 2500 psi CONCRETE[1,2,3,4,5,6,7,8,9]

Wind and SDC A & B - Allowable Loads (lbs.)												
Model No.	Nominal Post Size	Material Thickness		Dimensions				Fasteners		Uncracked	Cracked	Download[10] C_D=1.0
		Base (Ga)	Strap (Ga)	W	L	H	HB	Nails	Machine Bolts	Uplift	Uplift	
PBS44A	4x4	12	14	$3^9/_{16}$	$3^1/_2$	$6^1/_4$	$3^7/_{16}$	14-16d	Two- $^1/_2$" Dia.	1,235	865	10,975
PBS46	4x6	12	14	$3^9/_{16}$	$5^7/_{16}$	$6^9/_{16}$	$3^3/_8$	14-16d	Two- $^1/_2$" Dia.	1,235	865	14,420
PBS66	6x6	12	12	$5^1/_2$	$5^3/_8$	$6^1/_2$	$3^{11}/_{16}$	14-16d	Two- $^1/_2$" Dia.	2,165	2,165	14,420
SDC C-F - Allowable Loads (lbs.)												
Model No.	Nominal Post Size	Material		Dimensions				Fasteners		Uncracked	Cracked	Download[10] C_D=1.0
		Base (Ga)	Strap (Ga)	W	L	H	HB	Nails	Machine Bolts	Uplift	Uplift	
PBS44A	4x4	12	14	$3^9/_{16}$	$3^1/_2$	$6^1/_4$	$3^7/_{16}$	14-16d	Two- $^1/_2$" Dia.	1080	755	10,975
PBS46	4x6	12	14	$3^9/_{16}$	$5^7/_{16}$	$6^9/_{16}$	$3^3/_8$	14-16d	Two- $^1/_2$" Dia.	1080	755	14,420
PBS66	6x6	12	12	$5^1/_2$	$5^3/_8$	$6^1/_2$	$3^{11}/_{16}$	14-16d	Two- $^1/_2$" Dia.	2,165	2,165	14,420

For **SI**: 1 in = 25.4 mm, 1 lbs = 4.45 N, 1 psi = 6.895 kPa.

[1]See Figure 4 for dimension variables and installation requirements.
[2]Multiply Seismic and Wind ASD load values by 1.43 or 1.67 respectively to obtain LRFD capacities.
[3]In accordance with IBC Section 1613.1, detached one- and two-family dwellings in Seismic Design Category (SDC) C may use "Wind and SDC A & B" allowable loads.
[4]Minimum side cover required is 2". See Figure 4 and Section 5.9 of this report.
[5]Post bases do not provide adequate resistance to prevent members from rotating about the base, therefore, alternative means to provide lateral resistance must be provided.
[6]Download shall be reduced where limited by the design capacity of the column. Minimum foundation dimensions are for anchorage only. Foundation design (size and reinforcement) by others. See Section 5.9 and 5.10 of this report.
[7]NAILS: 16d = 16d Common = 0.162" dia. X $3^1/_2$" long.
[8]See Section 3.2.2 for wood post requirements.
[9]Allowable load values for column bases for which both nail and bolt fasteners are shown are for one fastener type or the other; nails and bolts shall not be used in combination in any single installation.
[10]Loads may not be increased for short-term loading.

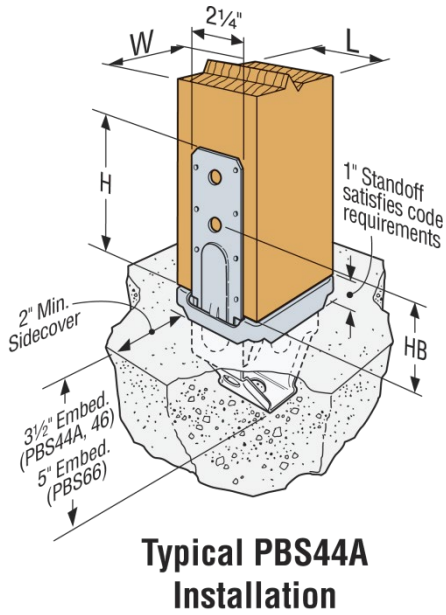

FIGURE 4

TABLE 5—ALLOWABLE STRESS DESIGN (ASD) LOADS FOR EPS4Z COLUMN BASES – 2500 psi CONCRETE[1,2,3,4,5,6,7,8,9,]

Wind and SDC A & B - Allowable Loads (lbs.)				
Model No.	**Nails**	**Uncracked**	**Cracked**	**Download[10]**
		Uplift	**Uplift**	
EPS4Z	8- 10dx1$^1/_2$	940	660	19,020
SDC C-F - Allowable Loads (lbs.)				
Model No.	**Nails**	**Uncracked**	**Cracked**	**Download[10]**
		Uplift	**Uplift**	
EPS4Z	8- 10dx1$^1/_2$	825	575	19,020

For **SI**: 1 in = 25.4 mm, 1 lbs = 4.45 N, 1 psi = 6.895 kPa.

[1]See Figure 5 for dimension variables and installation requirements.
[2]Multiply Seismic and Wind ASD load values by 1.43 or 1.67 respectively to obtain LRFD capacities.
[3]In accordance with IBC Section 1613.1, detached one- and two-family dwellings in Seismic Design Category (SDC) C may use "Wind and SDC A & B" allowable loads.
[4]For full loads, minimum side cover required is 2". See Figure 5 and Section 5.9 of this report.
[5]Post bases do not provide adequate resistance to prevent members from rotating about the base, therefore, alternative means to provide lateral resistance must be provided.
[6]Minimum foundation dimensions are for anchorage only. Foundation design (size and reinforcement) by others. See Section 5.9 and 5.10 of this report.
[7]NAILS: 10dx1$^1/_2$ = 0.148" dia. X 1$^1/_2$" long.
[8]See Section 3.2.2 for wood post requirements.
[9]Loads must be reduced where limited by the capacity of the wood member or supporting concrete, whichever is lower.
[10]Allowable download determined in accordance with NDS Section 3.10.1 for a 4x4 DF-L No. 2 with C_D = 1.00, and post with no incising factor C_i. Download must be adjusted for incised lumber and/or other species and grades.

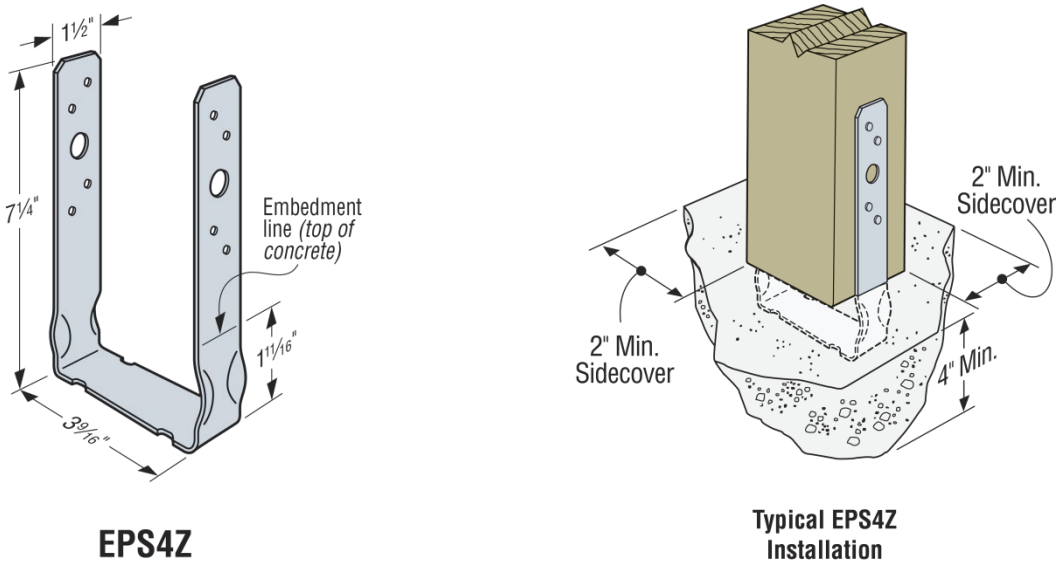

FIGURE 5

TABLE 6—ALLOWABLE STRESS DESIGN (ASD) LOADS FOR CB COLUMN BASES – 2500 psi CONCRETE[1,2,3,4,5,6,7,8,9,10]

Wind and SDC A & B - Allowable Loads (lbs.)												
Model No.	Nominal Column Size	Material		Dimensions			Column Fasteners			Uncracked	Cracked	Download[11]
		Strap (Ga x Width)	Base (Ga)	W_1	W_2	D	Nails	Machine Bolts				
								Qty.	Dia.	Uplift	Uplift	
CB44	4x4	8 ga x 2	8	$3^9/_{16}$	$3^9/_{16}$	8	NA	2	$^5/_8$	6,110	4,510	19,020
CB46	4x6	8 ga x 2	8	$3^9/_{16}$	$5^1/_2$	8	NA	2	$^5/_8$	6,110	4,510	28,585
CB48	4x8	8 ga x 2	8	$3^9/_{16}$	$7^1/_2$	8	NA	2	$^5/_8$	6,110	4,510	35,970
CB66	6x6	8 ga x 3	8	$5^1/_2$	$5^1/_2$	8	NA	2	$^5/_8$	6,110	4,510	30,250
CB68	6x8	8 ga x 3	8	$5^1/_2$	$7^1/_2$	7	NA	2	$^5/_8$	6,110	4,510	41,250
SDC C-F - Allowable Loads (lbs.)												
Model No.	Nominal Column Size	Material		Dimensions			Column Fasteners			Uncracked	Cracked	Download[11]
		Strap (Ga x Width)	Base (Ga)	W_1	W_2	D	Nails	Machine Bolts				
								Qty.	Dia.	Uplift	Uplift	
CB44	4x4	8 ga x 2	8	$3^9/_{16}$	$3^9/_{16}$	8	NA	2	$^5/_8$	5,640	3,945	19,020
CB46	4x6	8 ga x 2	8	$3^9/_{16}$	$5^1/_2$	8	NA	2	$^5/_8$	5,640	3,945	28,585
CB48	4x8	8 ga x 2	8	$3^9/_{16}$	$7^1/_2$	8	NA	2	$^5/_8$	5,640	3,945	35,970
CB66	6x6	8 ga x 3	8	$5^1/_2$	$5^1/_2$	8	NA	2	$^5/_8$	5,640	3,945	30,250
CB68	6x8	8 ga x 3	8	$5^1/_2$	$7^1/_2$	7	NA	2	$^5/_8$	5,640	3,945	41,250

For **SI**: 1 in = 25.4 mm, 1 lbs = 4.45 N, 1 psi = 6.895 kPa.

[1]See Figure 6 for dimension variables and installation requirements.
[2]Multiply Seismic and Wind ASD load values by 1.43 or 1.67 respectively to obtain LRFD capacities.
[3]In accordance with IBC Section 1613.1, detached one- and two-family dwellings in Seismic Design Category (SDC) C may use "Wind and SDC A & B" allowable loads.
[4]Minimum side cover required is 3" for CB. See Figure 6 and Section 5.9 of this report.
[5]Post bases do not provide adequate resistance to prevent members from rotating about the base, therefore, alternative means to provide lateral resistance must be provided.
[6]Minimum foundation dimensions are for anchorage only. Foundation design (size and reinforcement) by others. See Section 5.9 and 5.10 of this report.
[7]NAILS: 16d = 0.162" dia. X $3^1/_2$" long.
[8]See Section 3.2.2 for wood post requirements.
[9]Allowable load values for column bases for which both nail and bolt fasteners are shown are for one fastener type or the other; nails and bolts shall not be used in combination in any single installation.
[10]Allowable loads must be reduced where limited by the design capacity of the wood member or supporting concrete, whichever is lower.
[11]Allowable download determined in accordance with NDS Section 3.10.1 using DF-L No. 2 for 4x posts and DF-L No. 1 for 6x posts, with C_D = 1.00, and with no incising factor C_i. Download must be adjusted for incised lumber and/or other species and grades.

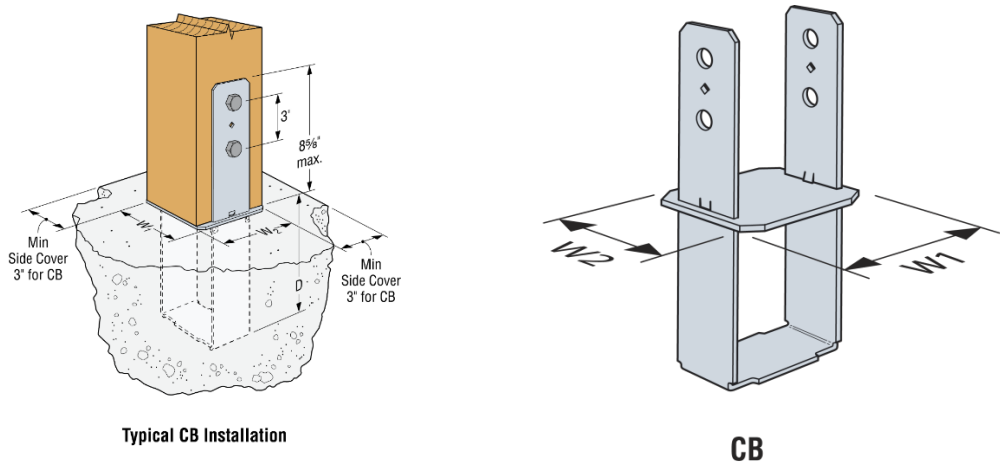

("D" is minimum embedment depth.)

FIGURE 6

TABLE 7—ALLOWABLE STRESS DESIGN (ASD) LOADS FOR PPBZ POST BASES - 2500 psi Concrete[1,2,3,4,5,6,7,8]

Wind and SDC A & B - Allowable Loads (lbs.)											
Model No.	Nominal Column Size	Material		Dimensions (in.)				Nails	Uncracked	Cracked	Download C_D=1.0
		Base (Ga)	Strap (Ga x Width)	W_1	W_2	D	H		Uplift	Uplift	
PPB44-4Z	4x4	12	12 ga x $1^1/_2$	$3^5/_8$	$3^5/_{16}$	4	$5^3/_4$	12-10d	1,420	995	7,830
PPB44-6Z	4x4	12	12 ga x $1^1/_2$	$3^5/_8$	$3^5/_{16}$	6	$5^3/_4$		2,105	2,105	10,505
SDC C-F - Allowable Loads (lbs.)											
Model No.	Nominal Column Size	Material		Dimensions (in.)				Nails	Uncracked	Cracked	Download C_D=1.0
		Base (Ga)	Strap (Ga x Width)	W_1	W_1	D	H		Uplift	Uplift	
PPB44-4Z	4x4	12	12 ga x $1^1/_2$	$3^5/_8$	$3^5/_{16}$	4	$5^3/_4$	12-10d	1,245	870	7,830
PPB44-6Z	4x4	12	12 ga x $1^1/_2$	$3^5/_8$	$3^5/_{16}$	6	$5^3/_4$		2,105	1,895	10,505

For **SI:** 1 in = 25.4 mm, 1 lbs = 4.45 N, 1 psi = 6.895 kPa.

[1]See Figure 7 for dimension variables and installation requirements.

[2]Multiply Seismic and Wind ASD load values by 1.43 or 1.67 respectively to obtain LRFD capacities.

[3]In accordance with IBC Section 1613.1, detached one- and two- family dwellings in Seismic Design Category (SDC) C may use "Wind and SDC A & B" allowable loads.

[4]For full loads, minimum side cover required is 1". See Figure 7. Where a supporting concrete section is not used and the under-side of the slab is cast directly against the earth, a minimum 3" bottom concrete cover to the PPB is required.

[5]Post bases do not provide adequate resistance to prevent members from rotating about the base, therefore, are not recommended for non-top-supported installations (such as fences or unbraced carports).

[6]Download shall be reduced where limited by the design capacity of the column. Minimum foundation dimensions are for anchorage only. Foundation design (size and reinforcement) by others. See Section 5.9 and 5.10 of this report.

[7]NAILS: 10d = 10d Common = 0.148" dia. x 3" long.

[8]See Section 3.2.2 for wood post requirements.

[9]Loads may not be increased for short-term loading.

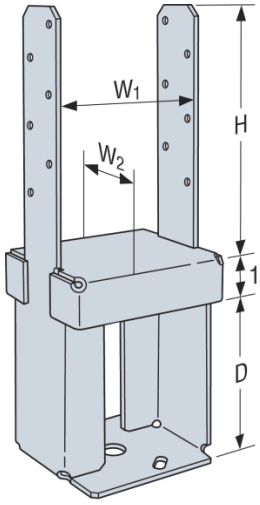

PPB44-4Z
(PPB44-6Z similar)

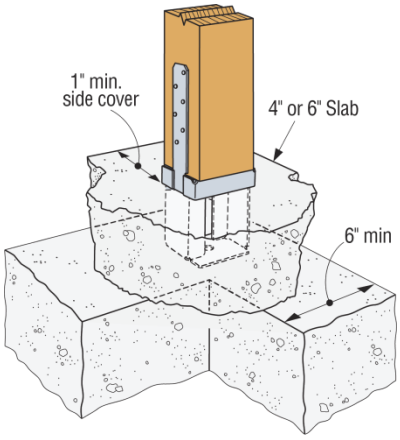

Typical PPB44-4Z Installation

FIGURE 7

TABLE 8—ALLOWABLE STRESS DESIGN (ASD) LOADS FOR MPBZ MOMENT POST BASES - 2500 psi Concrete[1,2,3,4,5,6,7,11]

Model No.	Nominal Column Size	Dimensions (inches)			Simpson Strong-Tie SDS Screws	Uncracked			Cracked			Download (lbs.)		Rotational Stiffness (lbs.-in./rad)[8,9,10]
		W_1, W_2	D	H		Uplift (lbs.)	Lateral (lbs.)	Moment (lbs.-ft)	Uplift (lbs.)	Lateral (lbs.)	Moment (lbs.-ft)	C_D = 1.00	C_D = 1.60	
Non-Reinforced Concrete														
Wind and SDC A & B - Allowable Loads														
MPB44Z	4x4	$3^9/_{16}$	$7^1/_4$	$7^1/_4$	16 - $^1/_4$ x $2^1/_2$	4,900	1,750	1,350	3,820	1,225	945	6,240	6,410	1,245,000
MPB66Z	6x6	$5^9/_{16}$	$7^1/_4$	$7^1/_4$	24 - $^1/_4$ x $2^1/_2$	5,815	3,435	2,680	5,815	2,405	1,875	9,360	10,855	2,405,000
MPB88Z	8x8	$7^9/_{16}$	$7^1/_4$	$7^1/_4$	36 - $^1/_4$ x 3	11,860	7,200[12]	4,160[12]	9,315	5,560[12]	2,910[12]	15,120	17,690	5,515,000
SDC C - F - Allowable Loads														
MPB44Z	4x4	$3^9/_{16}$	$7^1/_4$	$7^1/_4$	16 - $^1/_4$ x $2^1/_2$	4,785	1,535	1,180	3,350	1,075	830	6,240	6,410	1,245,000
MPB66Z	6x6	$5^9/_{16}$	$7^1/_4$	$7^1/_4$	24 - $^1/_4$ x $2^1/_2$	5,815	3,015	2,055	5,815	2,110	1,645	9,360	10,855	2,405,000
MPB88Z	8x8	$7^9/_{16}$	$7^1/_4$	$7^1/_4$	36 - $^1/_4$ x 3	10,155	6,965[12]	3,470[12]	8,165	4,875[12]	2,550[12]	15,120	17,690	5,515,000
Reinforced Concrete														
Wind and SDC A & B - Allowable Loads														
MPB44Z	4x4	$3^9/_{16}$	$7^1/_4$	$7^1/_4$	16 - $^1/_4$ x $2^1/_2$	4,900	1,750	1,520	3,820	1,225	1520	6,240	6,410	1,245,000
MPB66Z	6x6	$5^9/_{16}$	$7^1/_4$	$7^1/_4$	24 - $^1/_4$ x $2^1/_2$	5,815	3,435	3,730	5,815	2,405	3,190	9,360	10,855	2,405,000
MPB88Z	8x8	$7^9/_{16}$	$7^1/_4$	$7^1/_4$	36 - $^1/_4$ x 3	11,860	7,200[12]	4,560	9,315	5,560[12]	4,560	15,120	17,690	5,515,000
SDC C - F - Allowable Loads														
MPB44Z	4x4	$3^9/_{16}$	$7^1/_4$	$7^1/_4$	16 - $^1/_4$ x $2^1/_2$	4,785	1,535	1,520	3,350	1,075	1,520	6,240	6,410	1,245,000
MPB66Z	6x6	$5^9/_{16}$	$7^1/_4$	$7^1/_4$	24 - $^1/_4$ x $2^1/_2$	5,815	3,015	3,350	5,815	2,110	2,795	9,360	10,855	2,405,000
MPB88Z	8x8	$7^9/_{16}$	$7^1/_4$	$7^1/_4$	36 - $^1/_4$ x 3	10,155	6,965[12]	4,560	8,165	4,875[12]	4,560	15,120	17,690	5,515,000

For **SI**: 1 in = 25.4 mm, 1 lbs = 4.45 N, 1 psi = 6.895 kPa.

[1]See Figure 8 for dimension variables and installation requirements.
[2]Multiply Seismic and Wind ASD load values by 1.43 or 1.67 respectively to obtain LRFD capacities.
[3]In accordance with IBC Section 1613.1, detached one- and two- family dwellings in Seismic Design Category (SDC) C may use "Wind and SDC A & B" allowable loads.
[4]Minimum side cover required is 4" for MPB44Z, 5" for MPB66Z, and 6" for MPB88Z. See Figures 8A and 8B.
[5]Allowable loads must be reduced where limited by the design capacity of the column or supporting concrete. Minimum foundation dimensions are for anchorage only. Foundation design (size and reinforcement) by others. See Sections 5.9 and 5.10 of this report.
[6]The tabulated allowable lateral and moment loads are applicable to both orthogonal directions.
[7]See Section 3.2.2 for wood post requirements.
[8]Tabulated rotational stiffness accounts for the rotation of the post within the base assembly, deflection of the connector, fastener slip and post deformation. Designer must account for additional deflection of post above the assembly due to post rotation and bending.
[9]To account for linear shrinkage of post up to 3%, multiply MPBZ rotational stiffness by 0.75. Reduction may be linearly interpolated for shrinkage less than 3%.
[10]Tabulated rotational stiffness values are based on moment-rotation at maximum allowable moment loads and should not be used for higher loads.
[11]For wet-service applications, loads shall be the lesser of the allowable load values in the table above or as shown in Table A below.
[12]Noted allowable shear load and moment values are based on testing MPB88Z installed in reinforced concrete footings. For reinforcing details see Figure 8A.
[13]Noted allowable moment values are based on testing MPBZs installed in reinforced concrete footings. See Figure 8B for reinforcement details unless noted otherwise.

Table A – Wet-Service Adjusted Allowable Loads				
Model	Uplift (lbs)	Lateral (lbs)	Download (lbs)	Moment (lbs-ft)
MPB44Z	3,430	1,700	4,370	1,065
MPB66Z	4,070	2,970	6,550	2,610
MPB88Z	8,300	5,040	10,585	3,190

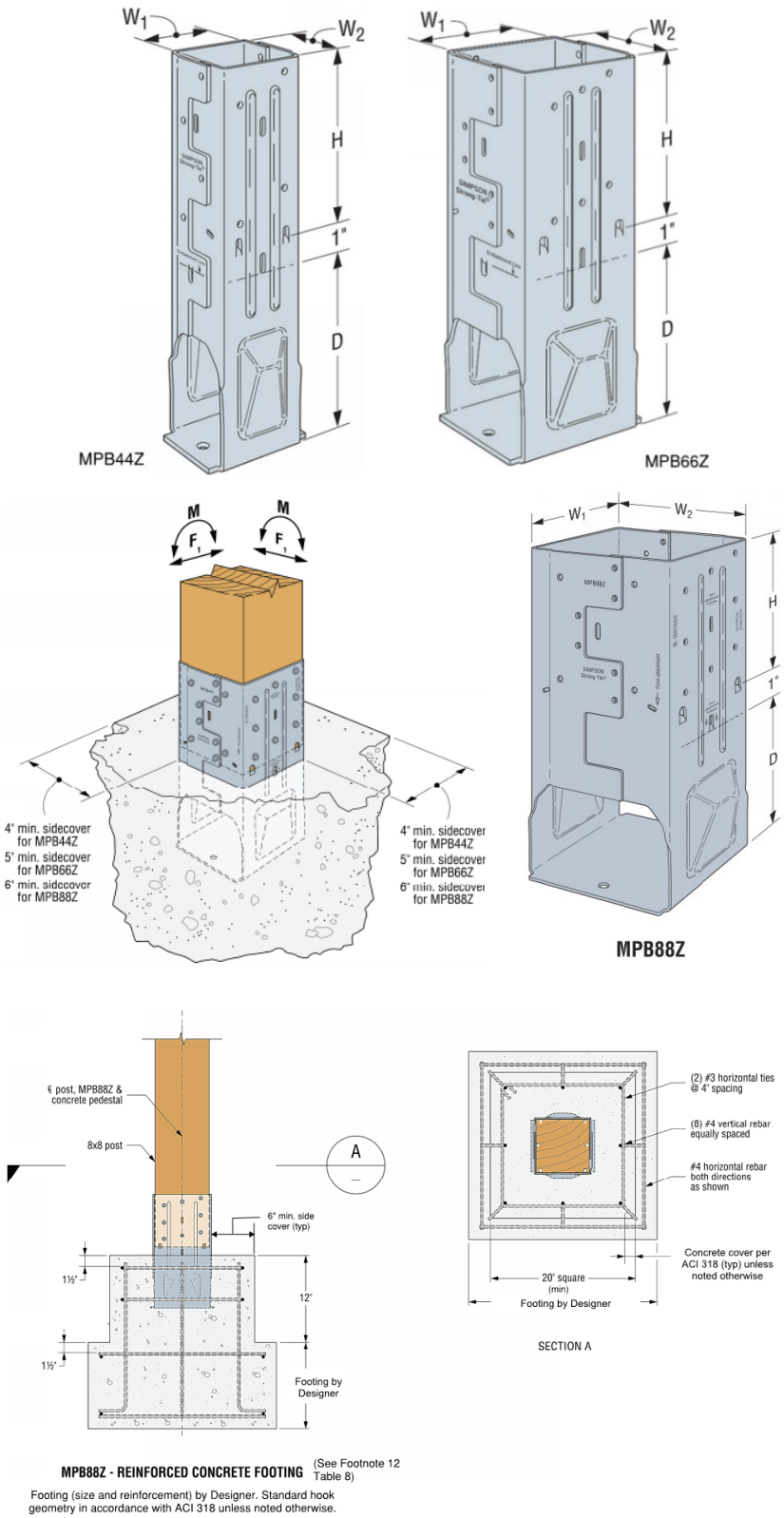

MPB88Z - REINFORCED CONCRETE FOOTING (See Footnote 12 Table 8)

Footing (size and reinforcement) by Designer. Standard hook geometry in accordance with ACI 318 unless noted otherwise.

FIGURE 8A

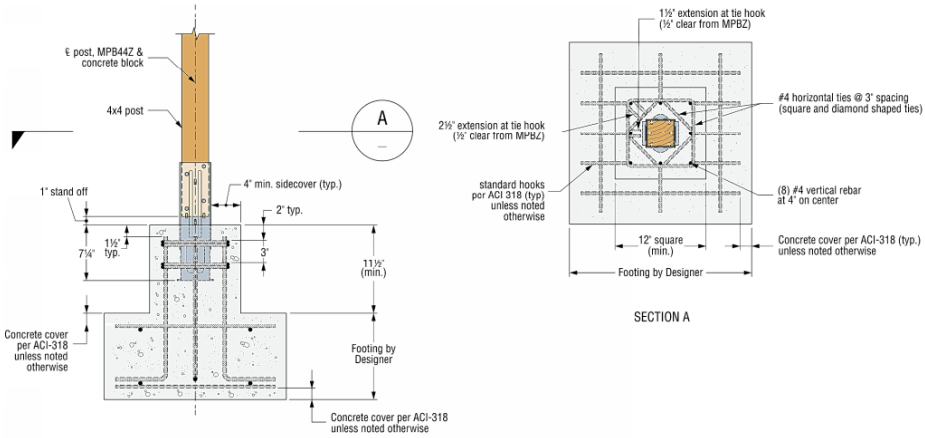

MPB44Z - REINFORCED CONCRETE FOOTING

Footing (size and reinforcement) by Designer.
Standard hook geometry in accordance with ACI 318 unless noted otherwise.

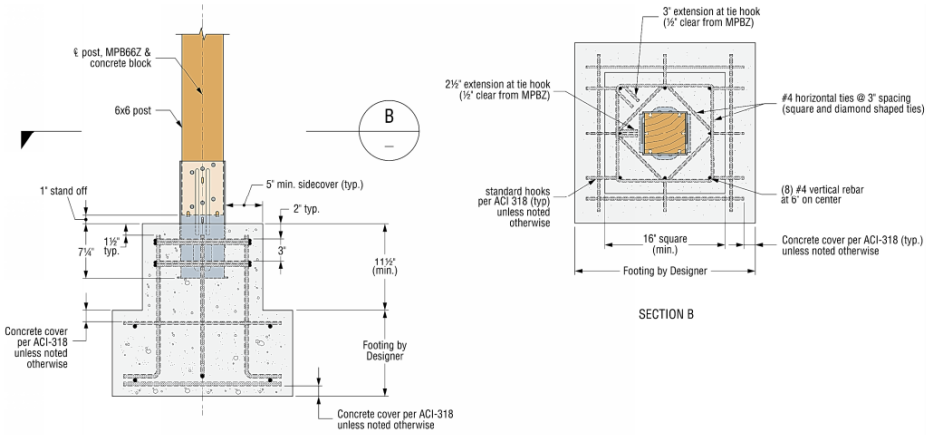

MPB66Z - REINFORCED CONCRETE FOOTING

Footing (size and reinforcement) by Designer.
Standard hook geometry in accordance with ACI 318 unless noted otherwise.

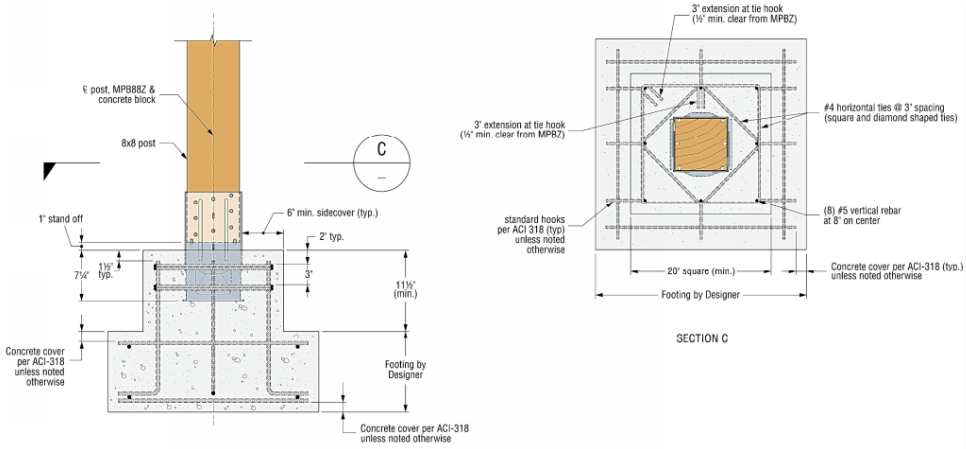

MPB88Z - REINFORCED CONCRETE FOOTING

Footing (size and reinforcement) by Designer.
Standard hook geometry in accordance with ACI 318 unless noted otherwise.

FIGURE 8B (See Footnote 13 Table 8)

TABLE 9—MATERIAL SPECIFICATIONS FOR COLUMN BASES

PRODUCT		ASTM SPECIFICATION	TYPE	GRADE	MINIMUM Fy (psi)	MINIMUM ELONGATION (%)	MINIMUM Fu (psi)	COATING
CBSQ-SDS2		A653	SS	33	33,000	14	45,000	G90
EPB44A		A653	SS	33	33,000	14	45,000	G90
EPB44, 46, 66	Base	A1011	SS	33	33,000	23	52,000	Gray paint or G90
	Pipe	A53	S	A	30,000	28	48,000	Gray paint or G90
PB		A653	SS	33	33,000	14	45,000	G90
PBS		A653	SS	33	33,000	14	45,000	G90
EPS4Z		A653	SS	33	33,000	14	45,000	G185
CB		A653	SS	33	33,000	14	45,000	G90
PPBZ		A653	SS	33	33,000	14	45,000	G185
MPBZ		A653	SS	33	33,000	14	45,000	G185

For **SI:** 1 psi = 6.895 kPa

DIVISION: 03 00 00—CONCRETE
Section: 03 16 00—Concrete Anchors

DIVISION: 06 00 00—WOOD, PLASTICS AND COMPOSITES
Section: 06 05 23—Wood, Plastic, and Composite Fastenings

REPORT HOLDER:

SIMPSON STRONG-TIE COMPANY INC.

EVALUATION SUBJECT:

SIMPSON STRONG-TIE EMBEDDED COLUMN BASES IN CONCRETE

1.0 REPORT PURPOSE AND SCOPE

Purpose:

The purpose of this evaluation report supplement is to indicate that Simpson Strong-Tie Embedded Column Bases used to connect vertical wood post members to concrete foundations (normalweight concrete) to resist uplift, lateral and download forces, described in ICC-ES evaluation report ESR-3050, have also been evaluated for compliance with the codes noted below, as adopted by the Los Angeles Department of Building and Safety (LADBS).

Applicable code editions:

- 2023 *City of Los Angeles Building Code* (LABC)
- 2023 *City of Los Angeles Residential Code* (LARC)

2.0 CONCLUSIONS

The Simpson Strong-Tie Embedded Column Bases used to connect vertical wood post members to concrete foundations (normalweight concrete) to resist uplift, lateral and download forces, described in Sections 2.0 through 7.0 of the evaluation report ESR-3050, comply with the LABC Chapter 23, and the LARC, and are subject to the conditions of use described in this supplement.

3.0 CONDITIONS OF USE

The Simpson Strong-Tie Embedded Column Bases used to connect vertical wood post members to concrete foundations (normalweight concrete) to resist uplift, lateral and download forces, described in this evaluation report supplement must comply with all of the following conditions:

- All applicable sections in the evaluation report ESR-3050.
- The design, installation, conditions of use and labeling are in accordance with the 2021 *International Building Code®* (2021 IBC) provisions noted in the evaluation report ESR-3050.
- The design, installation and inspection are in accordance with additional requirements of LABC Chapters 16 and 17, as applicable.
- Under the LARC, an engineered design in accordance with LARC Section R301.1.3 must be submitted.
- The seismic design provisions for hillside buildings referenced in LABC Section 2301.1 have not been considered and are outside of the scope of this supplement.

This supplement expires concurrently with the evaluation report, reissued August 2023.

ICC-ES Evaluation Reports are not to be construed as representing aesthetics or any other attributes not specifically addressed, nor are they to be construed as an endorsement of the subject of the report or a recommendation for its use. There is no warranty by ICC Evaluation Service, LLC, express or implied, as to any finding or other matter in this report, or as to any product covered by the report.

Copyright © 2023 ICC Evaluation Service, LLC. All rights reserved.

DIVISION: 03 00 00—CONCRETE
Section: 03 16 00—Concrete Anchors

DIVISION: 06 00 00—WOOD, PLASTICS AND COMPOSITES
Section: 06 05 23—Wood, Plastic, and Composite Fastenings

REPORT HOLDER:

SIMPSON STRONG-TIE COMPANY INC.

EVALUATION SUBJECT:

SIMPSON STRONG-TIE EMBEDDED COLUMN BASES IN CONCRETE

1.0 REPORT PURPOSE AND SCOPE

Purpose:

The purpose of this evaluation report supplement is to indicate that Simpson Strong-Tie Embedded Column Bases in Concrete, described in ICC-ES evaluation report ESR-3050, have also been evaluated for compliance with the codes noted below.

Applicable code editions:

- 2023 *Florida Building Code—Building*
- 2023 *Florida Building Code—Residential*

2.0 CONCLUSIONS

The Simpson Strong-Tie Embedded Column Bases in Concrete, described in Sections 2.0 through 7.0 of ICC-ES evaluation report ESR-3050, comply with the *Florida Building Code—Building* and *Florida Building Code—Residential*. The design requirements must be determined in accordance with the *Florida Building Code—Building* or the *Florida Building Code—Residential,* as applicable. The installation requirements noted in ICC-ES evaluation report ESR-3050 for the 2021 *International Building Code®* meet the requirements of the *Florida Building Code—Building* or *Florida Building Code—Residential,* as applicable.

Use of the Simpson Strong-Tie Embedded Column Bases in Concrete has also been found to be in compliance with the High Velocity Hurricane Zone provisions of the *Florida Building Code—Building* and the *Florida Building Code—Residential* with the following condition:

a. For connections subject to uplift, the connection must be designed for no less than 700 lbf (3,114 N).

For products falling under Florida Rule 61G20-3, verification that the report holder's quality assurance program is audited by a quality assurance entity approved by the Florida Building Commission for the type of inspections being conducted is the responsibility of an approved validation entity (or the code official when the report holder does not possess an approval by the Commission).

This supplement expires concurrently with the evaluation report, reissued August 2023.

ICC-ES Evaluation Reports are not to be construed as representing aesthetics or any other attributes not specifically addressed, nor are they to be construed as an endorsement of the subject of the report or a recommendation for its use. There is no warranty by ICC Evaluation Service, LLC, express or implied, as to any finding or other matter in this report, or as to any product covered by the report.

Copyright © 2023 ICC Evaluation Service, LLC. All rights reserved.