Evaluation Report

"SRR"

Metal Roof Assembly

Manufacturer:

Morin – a Kingspan Company

685 Middle Street

Bristol, CT 06010

(860) 857-0900

for

Florida Product Approval

FL 9612.2 R8

Florida Building Code 8th Edition (2023)

Per Rule 61G20-3

Method: 1 - D

Category: Structural Components

Sub - Category: Roof Deck

Product: "SRR" Roof Panel
Material: Aluminum
Support: Steel Purlins

Prepared by:
James L. Buckner, P.E., S.E.C.B.
Florida Professional Engineer # 31242
Florida Evaluation ANE ID: 1916
Project Manager: Diana Galloway
Report No. 23-558-SRR-A4P-ER
(Revises 20-268-SRR-A4P-ER, FL9612.2 R6, R7)
Date: 12/20/2023

This item has been digitally signed and sealed by James L. Buckner, P.E., on this date below. Printed copies of this document are not considered signed and sealed, and the signature must be verified on any electronic copies.

JAMES L. BUCKNER
LICENSE
No 31242
STATE OF FLORIDA
PROFESSIONAL ENGINEER

James L. Buckner, P.E.
FL31242

Date: 2023.12.20
'16:45:44 -05'00

Contents:

Evaluation Report Pages 1 – 8

Manufacturer:
Morin - A Kingspan Company
685 Middle Street
Bristol, CT 06010
(860) 857-0900
www.kingspan.com/us/en-us/product-groups/metal-roof-wall-systems

Product Name: **"SRR"**

Product Category: Structural Components

Product Sub-Category Roof Deck

Compliance Method: State Product Approval Rule 61G20-3.005 (1) (d)

Product/System Description:
"SRR" Roof Panel
Structural, Standing Seam Aluminum Roof Panel attached to steel purlins with two-piece panel clips.

Product Assembly as Evaluated:
Refer to Page 4 of this report for product assembly components/materials & standards:

1. Roof Panel
2. Panel Clips
3. Fasteners
4. Insulation (Optional)

Support:
Type:
Steel Purlins
(Design of steel support and its attachment to support framing is outside the scope of this evaluation.)

Description:
- 16 Gauge minimum
- Yield Strength: 50 ksi minimum

Slope: Minimum slope shall be in accordance with manufacturer's recommendations, FBC Section 1507.4.2 and applicable code sections.

Performance:
Wind Uplift Resistance:
- Design Uplift Pressure: **Refer to Table "A"**
  (Refer to "Table A" attachment details herein)

Performance Standards: The product described herein has demonstrated compliance with:

- ASTM E 1592–05 (2017) – *Test Method for Structural Performance of Sheet Metal Roof and Siding Systems by Uniform Static Air Pressure Difference*

Standards Equivalency: The ASTM E 1592-01 standard version used to test the evaluated product assembly is equivalent with the prescribed standards in ASTM E 1592-05 (2017) adopted by the Florida Building Code 8th Edition (2023) for use as evaluated in this report.

Code Compliance: The product(s) described herein have demonstrated compliance with the performance standards listed above as referenced in the:
Florida Building Code 8th Edition (2023)

Evaluation Report Scope: This product evaluation is limited to compliance with the structural requirements of the Florida Building Code, as related to the scope section to Florida Product Approval Rule 61G20-3.001.

Limitations and Conditions of Use:

- Diaphragm and axial load capacity is outside the scope of this evaluation.
- <u>Scope of "Limitations and Conditions of Use" for this evaluation:</u>
  This evaluation report for "Optional Statewide Approval" contains technical documentation, specifications and installation method(s) which include "Limitations and Conditions of Use" throughout the report in accordance with Rule 61G20-3.005. Per Rule 61G20-3.004, the Florida Building Commission is the authority to approve products under "Optional Statewide Approval".
- <u>Option for application outside "Limitations and Conditions of Use"</u>
  Rule 61G20-3.005(1)(e) allows engineering analysis for "project specific approval by the local authorities having jurisdiction in accordance with the alternate methods and materials authorized in the Code". Any modification of the product as evaluated in this report and approved by the Florida Building Commission is outside the scope of this evaluation and will be the responsibility of others.
- Design of support system is outside the scope of this report.
- Fire Classification is outside the scope of Rule 61G20-3, and is therefore not included in this evaluation.
- This evaluation report does not evaluate the use of this product for use in the High Velocity Hurricane Zone code section. (Dade & Broward Counties)

Quality Assurance: The manufacturer has demonstrated compliance of roof panel products in accordance with the Florida Building Code and Rule 61G20-3.0005 (3) for manufacturing under a quality assurance program audited by an approved quality assurance entity through Farabaugh Testing & Engineering (FBC Organization ID# QUA 7733).

Components/Materials (by Manufacturer):

Roof Panel: "SRR"

Material:	Aluminum
Thickness:	0.040" min.
Panel Width:	12" (max.) or 16" (max.) Coverage
Rib Height:	2-1/2"
Alloy Type:	3003 or 3004 H14
Corrosion Resistance:	In compliance with FBC Section 1507.4.3

Roof Panel Clips:

Product Name:	Morin "SRR Hook Clip"
Type:	Two-piece, fixed clip
Part #:	146E
Material & Thickness:	Clip Base: 0.050" Galvanized Steel Clip Hook: 0.040" 301 Stainless Steel, 1/2 hard
Yield Strength:	50 ksi min.
Dimensions:	4.5" (long) by 2.84" (wide) by 2.0625" (tall) and clip hook with nominal radius of 0.50"
Corrosion Resistance:	Per FBC Section 1506.7

Bearing Plates (Optional, used with rigid insulation)

Material & Thickness:	Steel, 16 gauge min.
Yield Strength:	50 ksi min.
Dimensions:	6" x 6" min.
Corrosion Resistance:	Per FBC Section 1506.7

Fastener:

Type:	Hex-Head Self-drilling Screw with WSW
Size :	**#12 -** 14 x 1-1/4"
Corrosion Resistance:	Per FBC Section 1506.6 and 1507.4.4
Standard:	Per SAE J78-1979

Components& Materials: (by Others)

Insulation (Optional):

Type 1:

Type:	Rigid Insulation Board
Thickness:	3" (max.)
Properties:	
Density:	2.25 pcf (lbs/ft^3) min.
Or Compressive Strength:	20 psi min.

Type 2:

Thickness:	Compressible Blanket Insulation 6" max. before compression

Insulation shall comply with FBC Section 1508. When insulation is incorporated, fastener length shall conform to penetrate thru bottom of support a minimum of 3/4".

Installation:

Installation Method:
(Refer to **"TABLE A"** below and drawings at the end of this report.)

- Clip/Purlin Spacing: **Refer to "TABLE A" Below**
- Two (2) fasteners per Clip (at each purlin intersection)
- Rib Interlock: Mechanically Seamed
- Minimum fastener penetration thru bottom of supports, 3/4". (through flange of steel purlins)

TABLE "A"

	Panel Width	Max. Purlin Spacing	# of Fasteners per Clip	**Design Pressure**
METHOD 1	16"	60" (5'- 0")	2	**- 29 PSF**
METHOD 2	16"	24" (2'- 0")	2	**- 39 PSF**
METHOD 3	12"	60" (5'- 0")	2	**- 38 PSF**
METHOD 4	12"	24" (2'- 0")	2	**- 60 PSF**

Notes:
1. Span condition: 3 or more
2. Allowable design pressure(s) for allowable stress design (ASD).

Install the "SRR" roof panel assembly in compliance with the installation method listed in this report and applicable code sections of FBC 2023. The installation method described herein is in accordance with the scope of this evaluation report. Refer to manufacturer's installation instructions as a supplemental guide for attachment.

Referenced Data:

1. ASTM E1592-01 Uplift Test
   By Farabaugh Engineering and Testing, Inc. (FBC Organization #TST ID: 1654)
   - Report # T229-07, Report Date: July 24, 2007
   - Report # T220[1]-07, Report Date: July 23, 2007
2. Equivalency of Test Standard Certification
   By James L. Buckner, P.E. @ CBUCK Engineering
   (FBC Organization # ANE 1916)
3. Quality Assurance
   By Farabaugh Testing & Engineering (FBC Organization ID# QUA 7733)
4. Certification of Independence
   By James L. Buckner, P.E. @ CBUCK Engineering
   (FBC Organization # ANE 1916)

[1]Rev 070919 (Corrected Test Report # - error T227-07)

Installation Method
Morin - A Kingspan Company
"SRR Panel" Aluminum Roof Panel attached to Steel Purlins"

Drawings

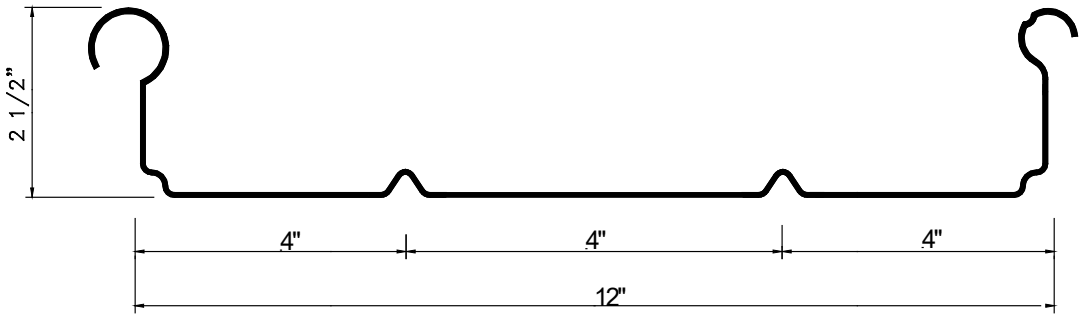

Typical "12" Wide Panel Profile

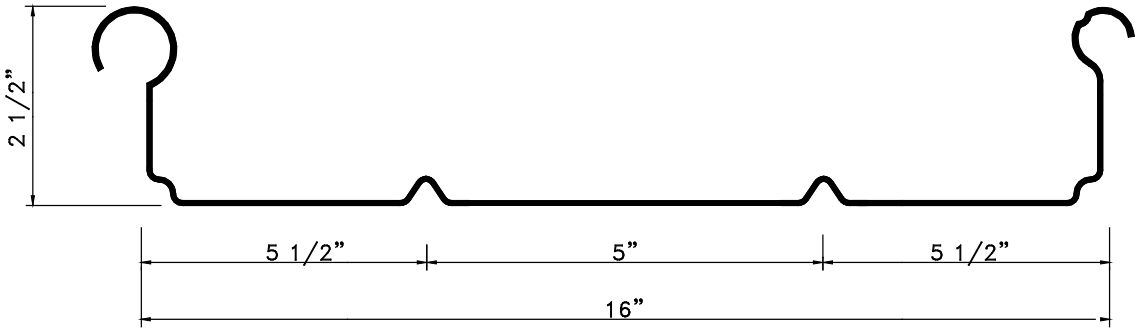

Typical "16" Wide Panel Profile

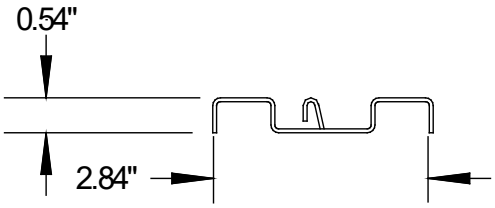

Panel Clip Base
(Galvanized Steel)

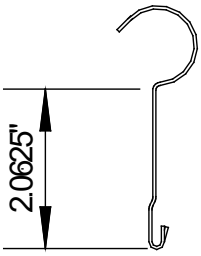

Panel Clip Hook
(Stainless Steel)

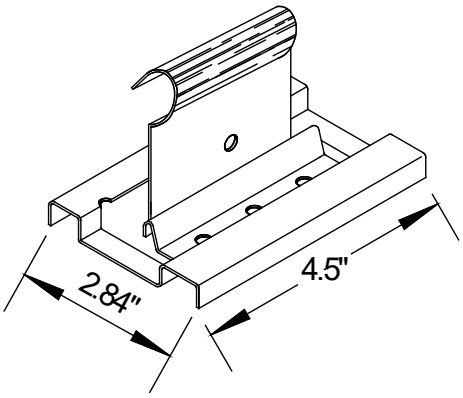

Panel Clip
(Hook & Base)

Two-Piece Panel Clip
(Part Number 146E)

Installation Method
Morin - A Kingspan Company
"SRR Panel" Aluminum Roof Panel attached to Steel Purlins

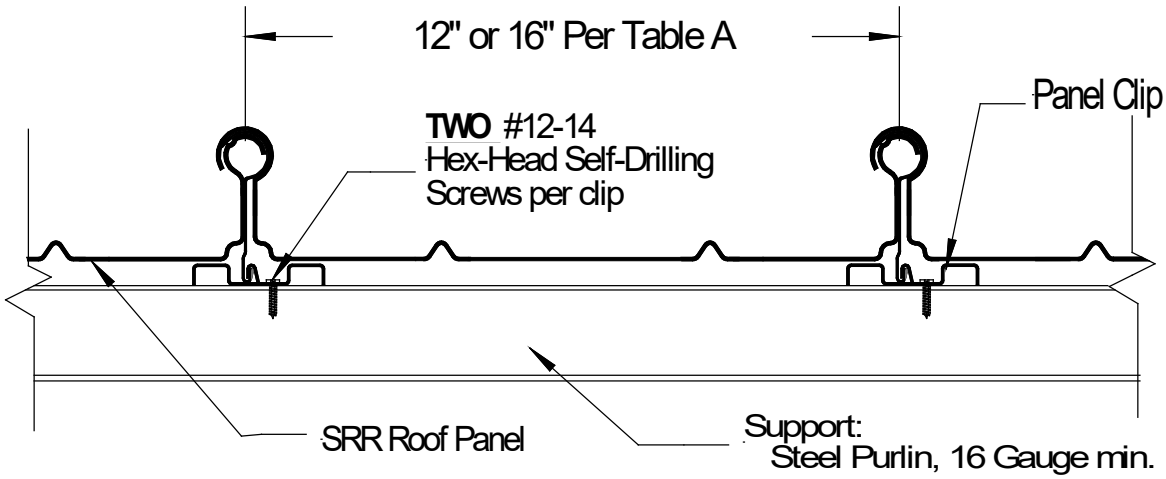

Typical Roof Assembly Isometric View

TABLE "A"				
	Panel Width	Max. Purlin Spacing	# of Fasteners per Clip	**Design Pressure**
METHOD 1	16"	60" (5'- 0")	2	**- 29 PSF**
METHOD 2	16"	24" (2'- 0")	2	**- 39 PSF**
METHOD 3	12"	60" (5'- 0")	2	**- 38 PSF**
METHOD 4	12"	24" (2'- 0")	2	**- 60 PSF**
Span condition: 3 or more				

Installation Method
Morin - A Kingspan Company
"SRR Panel" Aluminum Roof Panel attached to Steel Purlins

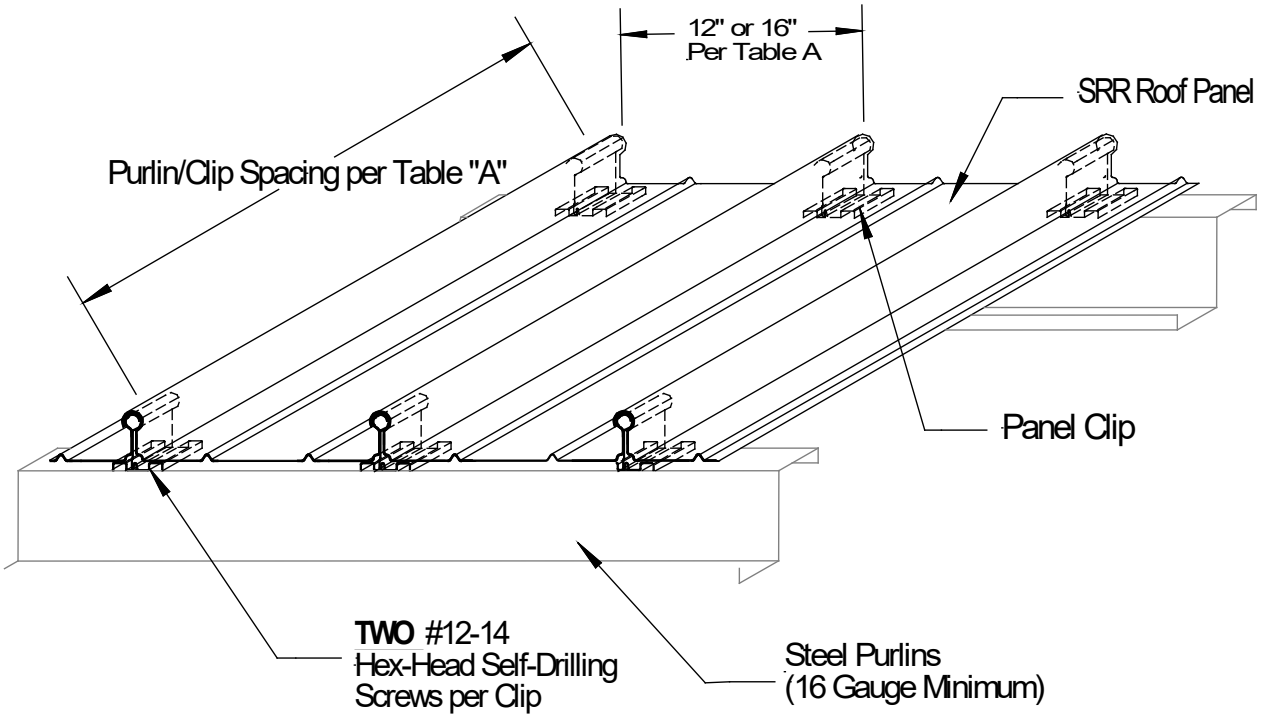

Typical Roof Assembly Isometric View

TABLE "A"				
	Panel Width	Max. Purlin Spacing	# of Fasteners per Clip	**Design Pressure**
METHOD 1	16"	60" (5'- 0")	2	**- 29 PSF**
METHOD 2	16"	24" (2'- 0")	2	**- 39 PSF**
METHOD 3	12"	60" (5'- 0")	2	**- 38 PSF**
METHOD 4	12"	24" (2'- 0")	2	**- 60 PSF**
Span condition: 3 or more				