4" PVC MULL BAR - LARGE MISSILE IMPACT

SHOWN w/DIFFERENT OPTIONS

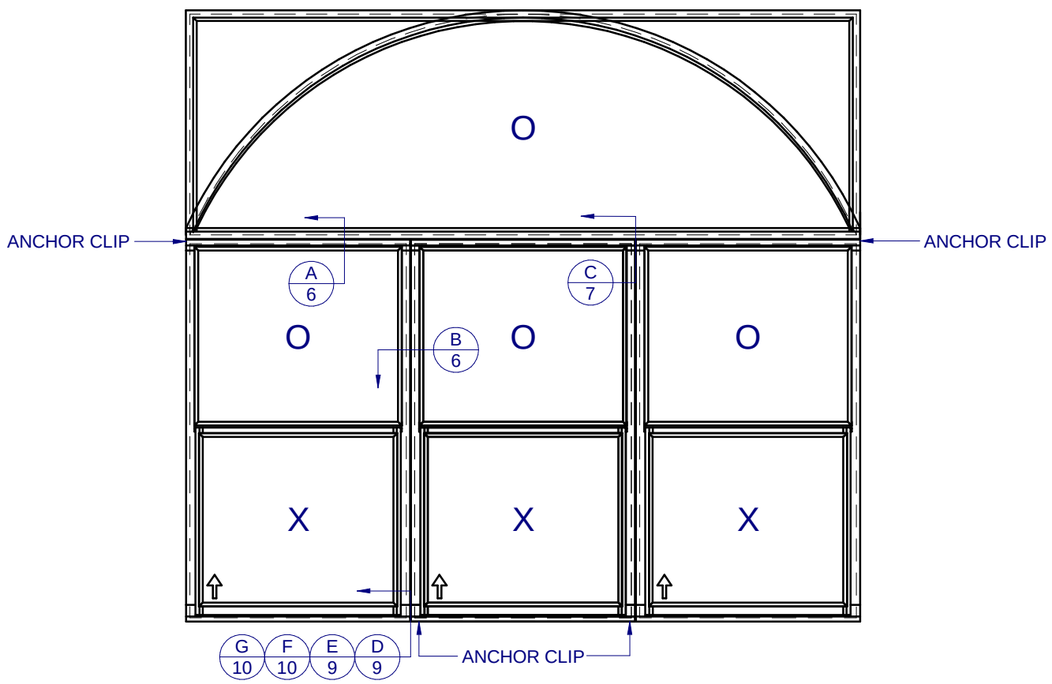

EXAMPLE HORIZ/.VERT. MULLION
FOR SECTION VIEW ONLY

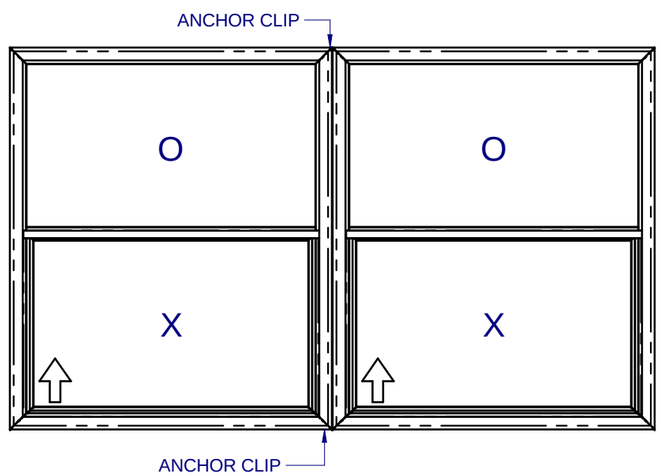

EXAMPLE VERTICAL MULLION FOR
PVC WINDOWS FOR SECTION VIEWS ONLY

TABLE OF CONTENTS

GENERAL NOTES & ELEVATIONS.....1
DP CHARTS.....2-3
BOM & EXTRUSIONS.....4
EXTRUSIONS.....5
SECTION VIEWS.....6-7
CONFIGURATIONS & ANCHOR NOTES.....8
INSTALLATION DETAILS.....9-10

GENERAL NOTES:

1. THE PRODUCT SHOWN HEREIN IS DESIGNED AND MANUFACTURED TO COMPLY WITH THE FLORIDA BUILDING CODE (FBC), CURRENT EDITION INCLUDING THE HIGH VELOCITY HURRICANE ZONE (HVHZ) AND IS RATED FOR WIND ZONE 4 MISSILE LEVEL D IMPACT USE AS DEFINED IN ASTM E 1996 PER THE FBC.
2. CONFIGURATIONS (SEE SHEETS 2-3): VERTICAL OR HORIZONTAL.
3. SEE MULLION CHARTS FOR MAX. DESIGN PRESSURES AND LENGTH. (REFER TO SHEETS 2-3)
4. ANCHORAGE: THE 33 1/3% STRESS INCREASE HAS NOT BEEN USED IN THE DESIGN OF THIS PRODUCT. SEE SHEETS 9-10 FOR ANCHOR DETAILS. WINDLOAD DURATION FACTOR Cd=1.6 WAS USED FOR WOOD ANCHOR CALCULATIONS.
5. PRODUCT APPROVED FOR IMPACT RESISTANCE. USE OF SHUTTER IS NOT REQUIRED.
6. DESIGN PRESSURE OF MULLED UNITS SHALL BE CONTROLLED BY THE LESSER DESIGN PRESSURE OF THE MULLION OR THE INDIVIDUAL WINDOW UNITS.
7. DESIGN PRESSURES AND INSTALLATION DETAILS SHOWN IN THIS DOCUMENT APPLY ONLY TO THE MULLION. WINDOWS MUST BE APPROVED UNDER SEPARATE APPROVAL.
8. RESPONSIBILITY OF SELECTING FENESTRATION PRODUCTS TO MEET ANY APPLICABLE LOCAL LAWS, BUILDING CODES, ORDINANCES OR OTHER SAFTEY REQUIREMENTS RESTS SOLELY WITH THE ARCHITECT, ENGINEER OF RECORD, BUILDING OWNER OR CONTRACTOR.
9. SINGLE UNITS TO BE MULLED ARE NOT LIMITED TO THOSE SHOWN IN THIS DRAWING. SINGLE UNITS TO BE MULLED TOGETHER MUST BE MANUFACTURED BY CUSTOM WINDOW SYSTEMS, INC. AND MUST BE MADE OUT OF VINYL PVC OR EXTRUDED ALUMINUM.
10. VERTICAL MULLED UNITS MAY BE MULLED INDEFINITELY AS LONG AS THE SINGLE UNIT WIDTH AND HEIGHT ARE NOT EXCEEDED, AND MULLIONS ARE ANCHORED AS SHOWN HERE IN.
11. HORIZONTAL MULLION SHALL EXTEND THE ENTIRE WIDTH OF THE MULLED UNIT. VERTICAL MULLION IS USED TO MULL SIDE BY SIDE UNITS TOGETHER.
12. DESIGN LOADS ARE BASED ON ALLOWABLE STRESS DESIGN, ASD.
13. FOR INSTALLATIONS WITHIN 3,000 FEET OF A SALTWATER COASTLINE, ANCHORAGE MUST BE REVIEWED FOR COMPLIANCE WITH FBC SECTION 1711 OR SECTION R332 OF THE FLORIDA RESIDENTIAL CODE. REFER TO THE CORRESPONDING EVALUATION REPORT OF THIS APPROVAL FOR ADDITIONAL INFORMATION.

Lucas Turner
2026.10.08
09:29:38
-05'00'

CWS
1900 SW 44TH AVE.
OCALA, FLORIDA 34474
WWW.CWS.CC

VMU04

4" PVC MULL BAR IMPACT

PROPRIETARY AND CONFIDENTIAL
THE INFORMATION CONTAINED IN THIS DRAWING IS THE SOLE PROPERTY OF CUSTOM WINDOW SYSTEMS, INC. ANY REPRODUCTION IN PART OR AS A WHOLE WITHOUT THE WRITTEN PERMISSION OF CUSTOM WINDOW SYSTEMS, INC IS PROHIBITED.

FLORIDA APPROVAL NO.:
9520

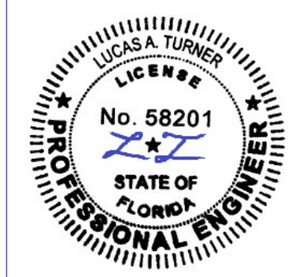

10/7/2026

LUCAS A. TURNER, P.E.
FL PE # 58201
Turner Engineering & Consulting, Inc.
2428 Old Natchez Trc Trl
Camden, TN 38320
PH. 941-380-1574

SHEET DESCRIPTION:
GENERAL NOTES AND ELEVATIONS

DRAWN BY:	DATE:
MCS	9/17/2026
DWG #: CWS-837	REV.: E
SCALE: 1:25	SHEET 1 OF 10

Design Pressure Chart, PSF, for Non-Intersected Impact PVC 4" Mullion H-1759, with 1522 clips using four (4) #10 screws or masonry anchors per each end of mullion. See note below chart for further anchorage information.

MULL LENGTH (in.)	OPENING SIZE (in.)																	
	39	45	51	57	63	69	75 3/8	81	87	93	99	107 3/8	114	120	126	132	138	145 3/8
48 3/4	120.0	120.0	120.0	120.0	120.0	120.0	120.0	120.0	120.0	120.0	120.0	120.0	120.0	120.0	120.0	120.0	120.0	120.0
53 1/8	120.0	120.0	120.0	120.0	120.0	120.0	118.6	115.1	112.3	110.3	109.1	108.6	108.6	108.6	108.6	108.6	108.6	108.6
57	120.0	120.0	120.0	120.0	117.9	111.7	106.5	102.9	99.9	97.6	96.0	94.6	94.3	94.3	94.3	94.3	94.3	70.0
63	120.0	120.0	119.6	110.3	102.9	97.1	92.1	88.5	85.4	82.9	80.9	78.9	77.9	77.4	77.2	70.0	70.0	70.0
68	120.0	120.0	108.8	100.0	93.1	87.5	82.7	79.2	76.2	73.6	71.6	69.3	68.1	67.2	66.6	66.3	66.3	66.3
72	120.0	112.1	101.4	93.1	86.5	81.1	76.5	73.1	70.1	67.6	65.5	63.2	61.8	60.8	60.0	59.5	59.2	
76	118.6	105.2	95.0	87.1	80.7	75.6	71.1	67.9	64.9	62.5	60.4	58.1	56.6	55.5	54.7	54.0		
80	70.0	70.0	70.0	70.0	70.0	70.0	66.5	63.3	60.5	58.1	56.0	53.7	52.2	51.1	50.1			
84	70.0	70.0	70.0	70.0	70.0	66.5	62.4	59.3	56.6	54.2	52.2	49.9	48.4	47.3				
88	70.0	70.0	70.0	70.0	67.3	62.8	58.8	55.8	53.2	50.9	48.9	46.7	45.2					
92	70.0	70.0	70.0	69.1	63.8	59.4	55.6	52.7	50.1	47.9	46.0	43.8						
96	70.0	70.0	70.0	65.8	60.6	56.4	52.7	49.9	47.4	45.3	43.4	41.3						

DP CHART IS FOR:
NON-INTERSECTED IMPACT 4" MULLION 1759, HORIZONTAL OR VERTICAL, USING (PER END):
1522 CLIPS
- (4) #10 SCREWS INTO WOOD or METAL
- (4) 3/16" ITW TAPCONS or DEWALT ULTRACON+ INTO SOLID CONCRETE or WOOD
- (4) 1/4" DEWALT ULTRACON+ INTO HOLLOW or GROUT-FILLED BLOCK

Design Pressure Chart, PSF, for Non-Intersected Impact PVC 4" Mullion H-1759, with 1767 clips using six (6) #10 screws or masonry anchors per each end of mullion. See note below chart for further anchorage information.

MULL LENGTH (in.)	OPENING SIZE (in.)																	
	39	45	51	57	63	69	75 3/8	81	87	93	99	107 3/8	114	120	126	132	138	145 3/8
48 3/4	120.0	120.0	120.0	120.0	120.0	120.0	120.0	120.0	120.0	120.0	120.0	120.0	120.0	120.0	120.0	120.0	120.0	120.0
53 1/8	120.0	120.0	120.0	120.0	120.0	120.0	120.0	120.0	120.0	120.0	120.0	120.0	120.0	120.0	120.0	120.0	120.0	120.0
57	120.0	120.0	120.0	120.0	120.0	120.0	120.0	120.0	120.0	120.0	120.0	120.0	120.0	120.0	120.0	120.0	120.0	70.0
63	120.0	120.0	120.0	120.0	120.0	120.0	120.0	120.0	120.0	120.0	120.0	117.5	116.0	115.2	114.9	70.0	70.0	70.0
68	120.0	120.0	120.0	120.0	120.0	120.0	120.0	117.9	113.4	109.6	106.5	103.2	101.3	100.0	70.0	70.0	70.0	70.0
72	120.0	120.0	120.0	120.0	120.0	120.0	113.9	108.8	104.3	100.6	97.5	94.1	70.0	70.0	70.0	70.0	70.0	
76	120.0	120.0	120.0	120.0	120.0	112.5	105.9	101.0	96.7	93.0	89.9	86.4	70.0	70.0	70.0	70.0		
80	70.0	70.0	70.0	70.0	70.0	70.0	70.0	70.0	70.0	70.0	70.0	70.0	70.0	70.0	70.0			
84	70.0	70.0	70.0	70.0	70.0	70.0	70.0	70.0	70.0	70.0	70.0	70.0	70.0	70.0				
88	70.0	70.0	70.0	70.0	70.0	70.0	70.0	70.0	70.0	70.0	70.0	69.5	67.3					
92	70.0	70.0	70.0	70.0	70.0	70.0	70.0	70.0	70.0	70.0	68.5	65.2						
96	70.0	70.0	70.0	70.0	70.0	70.0	70.0	70.0	69.0	65.3	62.2	58.5						

DP CHART IS FOR:
NON-INTERSECTED IMPACT 4" MULLION 1759, HORIZONTAL OR VERTICAL, USING (PER END):
1767 CLIPS
- (6) #10 SCREWS INTO WOOD or METAL
- (6) 3/16" ITW TAPCONS or DEWALT ULTRACON+ INTO SOLID CONCRETE or WOOD
- (6) 1/4" DEWALT ULTRACON+ INTO HOLLOW or GROUT-FILLED BLOCK

Design Pressure Chart, PSF, for Non-Intersected Impact PVC 4" Mullion H-1759, w/1767 clips using six (6) #12 screws or 1/4" Dewalt Ultracon+ per each end of mullion. See note below chart for further anchorage information.

MULL LENGTH (in.)	OPENING SIZE (in.)																	
	39	45	51	57	63	69	75 3/8	81	87	93	99	107 3/8	114	120	126	132	138	145 3/8
48 3/4	120.0	120.0	120.0	120.0	120.0	120.0	120.0	120.0	120.0	120.0	120.0	120.0	120.0	120.0	120.0	120.0	120.0	120.0
53 1/8	120.0	120.0	120.0	120.0	120.0	120.0	120.0	120.0	120.0	120.0	120.0	120.0	120.0	120.0	120.0	120.0	120.0	120.0
57	120.0	120.0	120.0	120.0	120.0	120.0	120.0	120.0	120.0	120.0	120.0	120.0	120.0	120.0	120.0	120.0	120.0	70.0
63	120.0	120.0	120.0	120.0	120.0	120.0	120.0	120.0	120.0	120.0	120.0	120.0	120.0	120.0	120.0	70.0	70.0	70.0
68	120.0	120.0	120.0	120.0	120.0	120.0	120.0	120.0	120.0	120.0	120.0	120.0	120.0	119.7	70.0	70.0	70.0	70.0
72	120.0	120.0	120.0	120.0	120.0	120.0	120.0	120.0	120.0	120.0	116.7	112.6	70.0	70.0	70.0	70.0	70.0	
76	120.0	120.0	120.0	120.0	120.0	120.0	120.0	120.0	115.7	111.3	107.6	103.5	70.0	70.0	70.0	70.0		
80	70.0	70.0	70.0	70.0	70.0	70.0	70.0	70.0	70.0	70.0	70.0	70.0	70.0	70.0	70.0			
84	70.0	70.0	70.0	70.0	70.0	70.0	70.0	70.0	70.0	70.0	70.0	70.0	70.0	70.0				
88	70.0	70.0	70.0	70.0	70.0	70.0	70.0	70.0	70.0	70.0	70.0	70.0	70.0					
92	70.0	70.0	70.0	70.0	70.0	70.0	70.0	70.0	70.0	70.0	70.0	67.2						
96	70.0	70.0	70.0	70.0	70.0	70.0	70.0	70.0	69.0	65.3	62.2	58.5						

DP CHART IS FOR:
NON-INTERSECTED IMPACT 4" MULLION 1759, HORIZONTAL OR VERTICAL, USING (PER END):
1767 CLIPS
- (6) #12 SCREWS INTO WOOD or METAL
- (6) 1/4" DEWALT ULTRACON+ INTO SOLID CONCRETE or WOOD

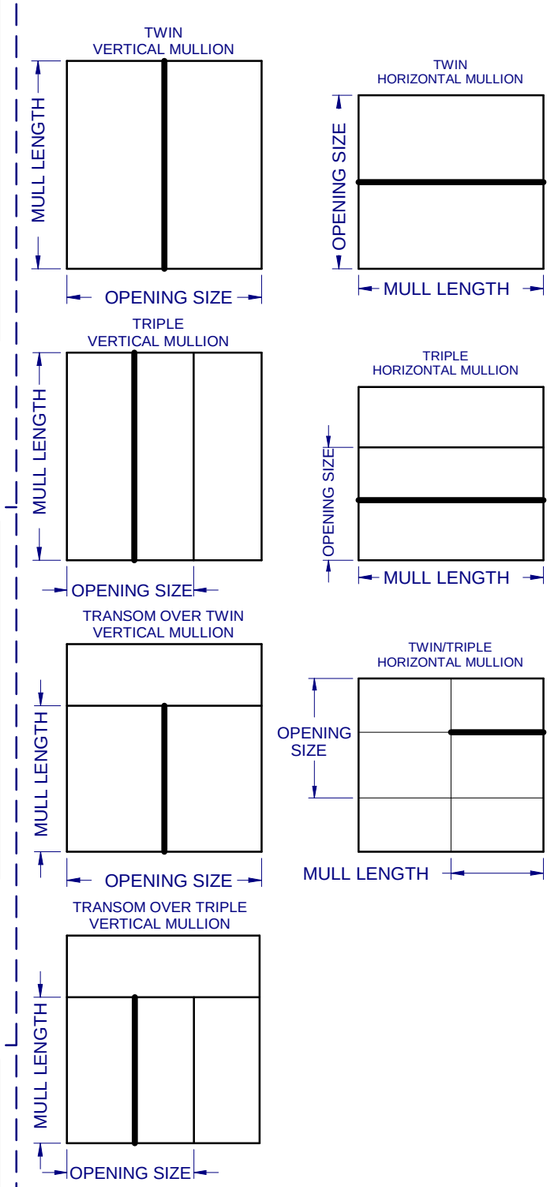

NOTES:
1. THE MULL BAR IN FOCUS FOR ANY GIVEN CONFIGURATION IS SHOWN IN BOLD.
2. AN INTERSECTED MULL BAR HAS OTHER MULL BAR(S) ATTACHED TO IT (SHOWN IN DASHES) THROUGH THE USE OF MULL BAR CLIPS. AN INTERSECTED MULL BAR WILL ALWAYS BE ATTACHED TO THE SUBSTRATE AT BOTH ENDS.
3. NON-INTERSECTED MULL BARS CAN BE ATTACHED TO THE SUBSTRATE AND OTHER MULL BARS.
4. REFER TO NOTE 13 ON SHEET 1 FOR ADDITIONAL ANCHOR REQUIREMENTS FOR INSTALLATIONS WITHIN 3,000 FEET OF A SALTWATER COASTLINE.

CWS
1900 SW 44TH AVE.
OCALA, FLORIDA 34474
WWW.CWS.CC

VMU04

4" PVC MULL BAR IMPACT

PROPRIETARY AND CONFIDENTIAL
THE INFORMATION CONTAINED IN THIS DRAWING IS THE SOLE PROPERTY OF CUSTOM WINDOW SYSTEMS, INC. ANY REPRODUCTION IN PART OR AS A WHOLE WITHOUT THE WRITTEN PERMISSION OF CUSTOM WINDOW SYSTEMS, INC IS PROHIBITED.

FLORIDA APPROVAL NO.:
9520

LUCAS A. TURNER
LICENSE
No. 58201
STATE OF FLORIDA
PROFESSIONAL ENGINEER

10/7/2026

LUCAS A. TURNER, P.E.
FL PE # 58201
Turner Engineering & Consulting, Inc.
2428 Old Natchez Trc Trl
Camden, TN 38320
PH. 941-380-1574

SHEET DESCRIPTION:
DP CHARTS NON-INTERSECTED MULLS

DRAWN BY:	DATE:
MCS	9/17/2026
DWG #: CWS-837	REV.: E
SCALE: 1:1	SHEET 2 OF 10

Design Pressure Chart, PSF, for Intersected Impact PVC 4" Mullion H-1759, w/1522 clips using four (4) #10 screws or masonry anchors per each end of mullion. See note below chart for further anchorage information.

MULL LENGTH (in.)	OPENING SIZE (in.)																	
	39	45	51	57	63	69	75 3/8	81	87	93	99	110 3/8	114	120	126	132	138	145 3/8
37	120.0	120.0	120.0	120.0	120.0	120.0	120.0	120.0	120.0	120.0	118.3	106.6	103.4	98.5	94.0	89.9	86.2	82.0
42 3/4	120.0	120.0	120.0	120.0	120.0	120.0	120.0	120.0	114.3	107.4	101.3	91.6	88.9	84.6	80.8	77.3	74.1	70.5
48 3/4	120.0	120.0	120.0	120.0	120.0	120.0	112.9	105.8	99.1	93.3	88.0	79.6	77.2	73.6	70.4	67.4	64.6	61.4
53 1/8	120.0	120.0	120.0	120.0	120.0	111.1	102.7	96.3	90.3	85.0	80.3	72.6	70.4	67.1	64.2	61.5	59.0	56.2
57	120.0	120.0	120.0	120.0	111.2	102.8	95.0	89.1	83.6	78.7	74.3	67.3	65.3	62.3	59.5	57.0	54.7	52.1
63	120.0	120.0	118.6	108.1	99.3	91.8	85.0	79.7	74.8	70.5	66.6	60.4	58.6	56.0	53.5	51.2		
68	120.0	120.0	108.4	98.9	90.9	84.2	78.0	73.2	68.7	64.8	61.3	55.5	53.9	51.5				
72	120.0	112.1	101.4	92.5	85.1	78.8	73.1	68.6	64.5	60.8	57.5	52.2	50.7					
75 3/8	119.7	106.2	95.9	87.7	80.7	74.8	69.4	65.2	61.3	57.8	54.7	49.6						

DP CHART IS FOR:
INTERSECTED IMPACT 4" MULLION 1759, HORIZONTAL OR VERTICAL, USING (PER END):
1522 CLIPS
- (4) #10 SCREWS INTO WOOD or METAL
- (4) 3/16" ITW TAPCONS or DEWALT ULTRACON+ INTO SOLID CONCRETE or WOOD
- (4) 1/4" DEWALT ULTRACON+ INTO HOLLOW or GROUT-FILLED BLOCK

Design Pressure Chart, PSF, for Intersected Impact PVC 4" Mullion H-1759, with 1767 clips using six (6) #10 screws or masonry anchors per each end of mullion. See note below chart for further anchorage information.

MULL LENGTH (in.)	OPENING SIZE (in.)																	
	39	45	51	57	63	69	75 3/8	81	87	93	99	110 3/8	114	120	126	132	138	145 3/8
37	120.0	120.0	120.0	120.0	120.0	120.0	120.0	120.0	120.0	120.0	120.0	120.0	120.0	120.0	120.0	120.0	120.0	120.0
42 3/4	120.0	120.0	120.0	120.0	120.0	120.0	120.0	120.0	120.0	120.0	120.0	120.0	120.0	120.0	120.0	115.1	110.3	105.0
48 3/4	120.0	120.0	120.0	120.0	120.0	120.0	120.0	120.0	120.0	120.0	120.0	118.5	114.9	109.6	104.7	100.3	96.1	91.5
53 1/8	120.0	120.0	120.0	120.0	120.0	120.0	120.0	120.0	120.0	120.0	119.5	108.1	104.9	100.0	95.5	91.5	87.8	83.6
57	120.0	120.0	120.0	120.0	120.0	120.0	120.0	120.0	120.0	117.1	110.7	100.2	97.2	92.7	88.6	84.8	81.4	77.6
63	120.0	120.0	120.0	120.0	120.0	120.0	120.0	118.7	111.4	105.0	99.2	89.9	87.3	83.3	79.6	76.2		
68	120.0	120.0	120.0	120.0	120.0	120.0	116.1	109.0	102.3	96.5	91.2	82.7	80.3	76.6				
72	120.0	120.0	120.0	120.0	120.0	117.3	108.8	102.2	96.0	90.5	85.6	77.7	75.4					
75 3/8	120.0	120.0	120.0	120.0	120.0	111.3	103.3	97.0	91.2	86.0	81.4	73.9						

DP CHART IS FOR:
INTERSECTED IMPACT 4" MULLION 1759, HORIZONTAL OR VERTICAL, USING (PER END):
1767 CLIPS
- (6) #10 SCREWS INTO WOOD or METAL
- (6) 3/16" ITW TAPCONS or DEWALT ULTRACON+ INTO SOLID CONCRETE or WOOD
- (6) 1/4" DEWALT ULTRACON+ INTO HOLLOW or GROUT-FILLED BLOCK

Design Pressure Chart, PSF, for Intersected Impact PVC 4" Mullion H-1759, with 1767 clips using six (6) #12 screws or 1/4" Dewalt Ultracon+ per each end of mullion. See note below chart for further anchorage information.

MULL LENGTH (in.)	OPENING SIZE (in.)																	
	39	45	51	57	63	69	75 3/8	81	87	93	99	110 3/8	114	120	126	132	138	145 3/8
37	120.0	120.0	120.0	120.0	120.0	120.0	120.0	120.0	120.0	120.0	120.0	120.0	120.0	120.0	120.0	120.0	120.0	120.0
42 3/4	120.0	120.0	120.0	120.0	120.0	120.0	120.0	120.0	120.0	120.0	120.0	120.0	120.0	120.0	120.0	120.0	120.0	120.0
48 3/4	120.0	120.0	120.0	120.0	120.0	120.0	120.0	120.0	120.0	120.0	120.0	120.0	120.0	120.0	120.0	120.0	115.1	109.5
53 1/8	120.0	120.0	120.0	120.0	120.0	120.0	120.0	120.0	120.0	120.0	120.0	120.0	120.0	119.7	114.3	109.5	105.1	100.1
57	120.0	120.0	120.0	120.0	120.0	120.0	120.0	120.0	120.0	120.0	120.0	120.0	116.4	111.0	106.0	101.6	97.4	92.8
63	120.0	120.0	120.0	120.0	120.0	120.0	120.0	120.0	120.0	120.0	118.8	107.6	104.5	99.7	95.3	91.2		
68	120.0	120.0	120.0	120.0	120.0	120.0	120.0	120.0	120.0	115.5	109.2	99.0	96.1	91.7				
72	120.0	120.0	120.0	120.0	120.0	120.0	120.0	120.0	115.0	108.3	102.5	93.0	90.3					
75 3/8	120.0	120.0	120.0	120.0	120.0	120.0	120.0	116.2	109.2	103.0	97.4	88.4						

DP CHART IS FOR:
INTERSECTED IMPACT 4" MULLION 1759, HORIZONTAL OR VERTICAL, USING (PER END):
1767 CLIPS
- (6) #12 SCREWS INTO WOOD or METAL
- (6) 1/4" DEWALT ULTRACON+ INTO SOLID CONCRETE or WOOD

TWIN/TRIPLE
VERTICAL MULLION

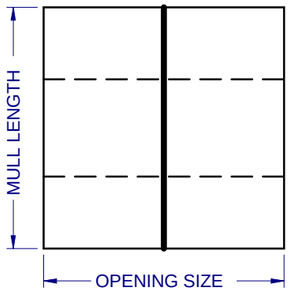

HORIZONTAL MULLION

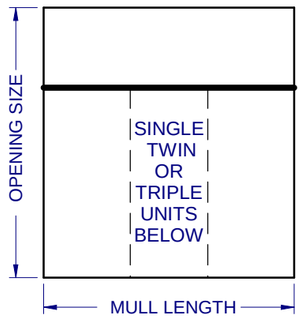

NOTES:
1. THE MULL BAR IN FOCUS FOR ANY GIVEN CONFIGURATION IS SHOWN IN BOLD.
2. AN INTERSECTED MULL BAR HAS OTHER MULL BAR(S) ATTACHED TO IT (SHOWN IN DASHES) THROUGH THE USE OF MULL BAR CLIPS. AN INTERSECTED MULL BAR WILL ALWAYS BE ATTACHED TO THE SUBSTRATE AT BOTH ENDS.
3. NON-INTERSECTED MULL BARS CAN BE ATTACHED TO THE SUBSTRATE AND OTHER MULL BARS.
4. REFER TO NOTE 13 ON SHEET 1 FOR ADDITIONAL ANCHOR REQUIREMENTS FOR INSTALLATIONS WITHIN 3,000 FEET OF A SALTWATER COASTLINE.

CWS
1900 SW 44TH AVE.
OCALA, FLORIDA 34474
WWW.CWS.CC

VMU04

4" PVC MULL BAR IMPACT

PROPRIETARY AND CONFIDENTIAL
THE INFORMATION CONTAINED IN THIS DRAWING IS THE SOLE PROPERTY OF CUSTOM WINDOW SYSTEMS, INC. ANY REPRODUCTION IN PART OR AS A WHOLE WITHOUT THE WRITTEN PERMISSION OF CUSTOM WINDOW SYSTEMS, INC IS PROHIBITED.

FLORIDA APPROVAL NO.:
9520

LUCAS A. TURNER LICENSE No. 58201 STATE OF FLORIDA PROFESSIONAL ENGINEER

10/7/2026

LUCAS A. TURNER, P.E.
FL PE # 58201
Turner Engineering & Consulting, Inc.
2428 Old Natchez Trc Trl
Camden, TN 38320
PH. 941-380-1574

SHEET DESCRIPTION:
DP CHARTS INTERSECTED MULLS

DRAWN BY:	DATE:
MCS	9/17/2026
DWG #: CWS-837	REV.: E
SCALE: 1:1	SHEET 3 OF 10

ITEM	PART #	DESCRIPTION
1	H-1759	MULL, 1 3/8" x 4", FLAT, PVC
2	S-1895	DRIP ADAPTER, HORZ, FLG
3	S-1896	FLANGE ADAPTER, VERT, FLG
4	S-6018	MULL COVER, EXT, FIN/BOX
5	F-1522-014	RETRO FIT MULL ANCHOR CLIP, FLG/BOX
6	F-1522-027	MULL ANCHOR CLIP, FIN
7	F-1767-002	L-ANGLE 4" MULL CLIP, STANDARD
8	F-1767-005L	L-ANGLE 4" MULL CLIP, FIN, LEFT
9	F-1767-005R	L-ANGLE 4" MULL CLIP, FIN, RIGHT
10	F-1767-007L	L-ANGLE 4" MULL CLIP, RETRO FLANGE, LEFT, FLG/BOX
11	F-1767-007R	L-ANGLE 4" MULL CLIP, RETRO FLANGE, RIGHT, FLG/BOX
12		#10 x 1 1/2", PANHEAD PHILIPS ZINC
13		#10 FLAT WASHER
14		CAULK
15		#10 OR #12 HEX WASHER HEAD TEK SCREW *(see note below)
16	S-1898	4" HORIZ. MULLION CLIP, PVC, INTERSECTING
18		#10 HEX WASHER HEAD TEK SCREW
19		#10 FH TEK SCREW

FRAME TYPE	OPENING	"T" MULLBAR CLIP (F-1522-XXX)	"L" MULLBAR CLIP (F-1767-XXX)
FLANGE	NEW	NOT RECOMMENDED	F-1767-002
	RETRO	F-1522-014	F-1767-007(L&R) or F-1767-002
FIN	NEW	F-1522-027	F-1767-005(L&R)
	RETRO	F-1522-027	F-1767-005(L&R)
BOX	NEW	NOT RECOMMENDED	F-1767-002
	RETRO	F-1522-014	F-1767-007(L&R) or F-1767-002

* USE WOOD SCREW SIZE (#10 OR #12), SPECIFIED IN WINDOW UNIT APPROVAL DOCUMENT

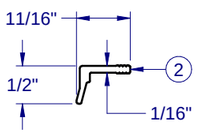

DRIP ADAPTER S-1895

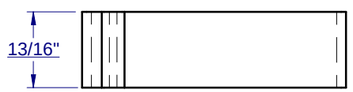

TOP VIEW

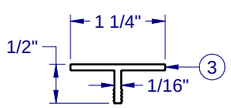

FLANGE ADAPTER S-1896

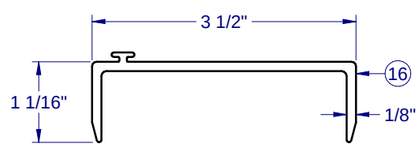

4" HORIZ. MULLION CLIP S-1898

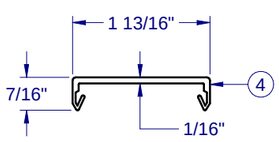

PVC MULL COVER-6018

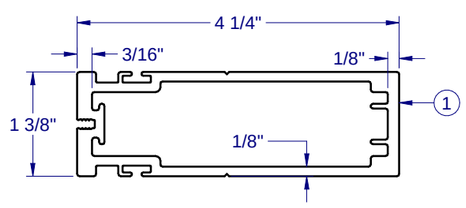

4" MULLBAR H-1759

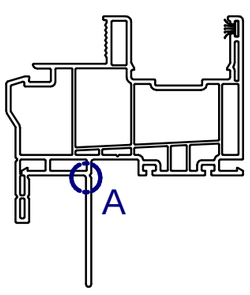

TYP. FIN FRAME

SCORE, BEND AND BREAK TO REMOVE FIN FOR FRAME ATTACHMENT TO MULL BAR

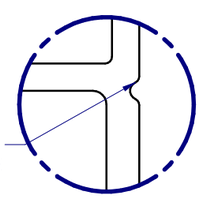

DETAIL A
3:1

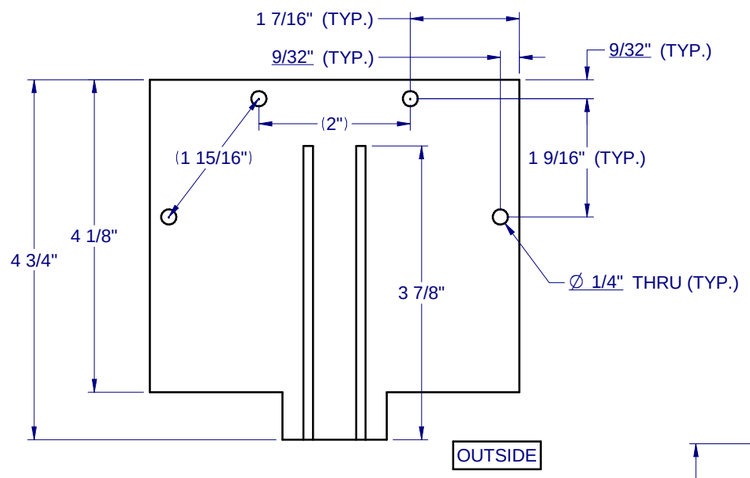

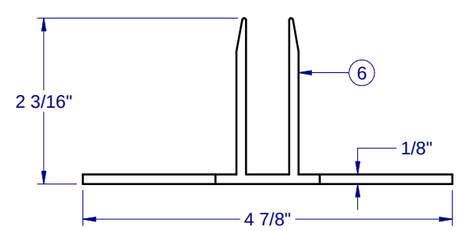

RETRO CLIP (4") F-1522-027

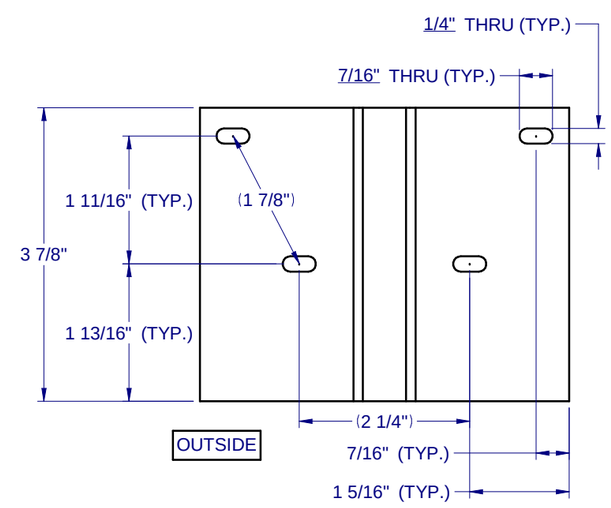

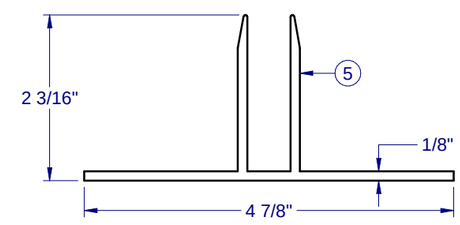

RETRO CLIP (4") F-1522-014

NOTE: ALL EXTRUSIONS ARE ALUMINUM 6063-T6 UNLESS OTHERWISE NOTED.

CWS
1900 SW 44TH AVE.
OCALA, FLORIDA 34474
WWW.CWS.CC

VMU04

4" PVC MULL BAR IMPACT

PROPRIETARY AND CONFIDENTIAL
THE INFORMATION CONTAINED IN THIS DRAWING IS THE SOLE PROPERTY OF CUSTOM WINDOW SYSTEMS, INC. ANY REPRODUCTION IN PART OR AS A WHOLE WITHOUT THE WRITTEN PERMISSION OF CUSTOM WINDOW SYSTEMS, INC IS PROHIBITED.

FLORIDA APPROVAL NO.:
9520

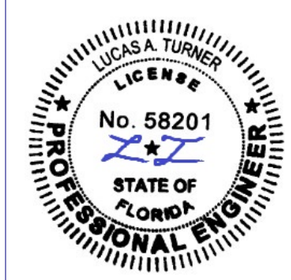

10/7/2026

LUCAS A. TURNER, P.E.
FL PE # 58201
Turner Engineering & Consulting, Inc.
2428 Old Natchez Trc Trl
Camden, TN 38320
PH. 941-380-1574

SHEET DESCRIPTION:
BOM AND EXTRUSIONS

DRAWN BY:	DATE:
MCS	9/17/2026
DWG #: CWS-837	REV.: E
SCALE: 1:2	SHEET 4 OF 10

FRAME TYPE	OPENING	"T" MULLBAR CLIP (F-1522-XXX)	"L" MULLBAR CLIP (F-1767-XXX)
FLANGE	NEW	NOT RECOMMENDED	F-1767-002
	RETRO	F-1522-014	F-1767-007(L&R) or F-1767-002
FIN	NEW	F-1522-027	F-1767-005(L&R)
	RETRO	F-1522-027	F-1767-005(L&R)
BOX	NEW	NOT RECOMMENDED	F-1767-002
	RETRO	F-1522-014	F-1767-007(L&R) or F-1767-002

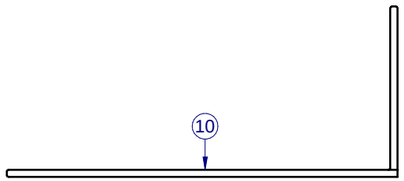

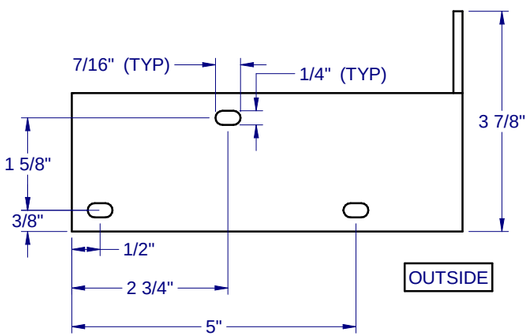

"L" ANGLE 4" MULL CLIP, RETRO FLG (LEFT) F-1767-007L

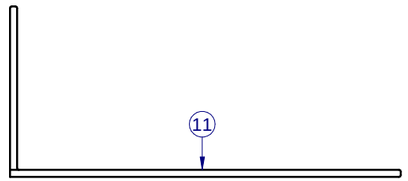

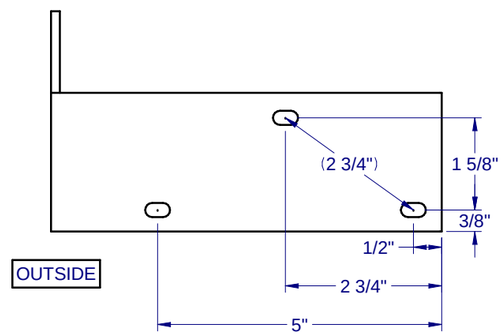

"L" ANGLE 4" MULL CLIP, RETRO FLG (RIGHT) F-1767-007R

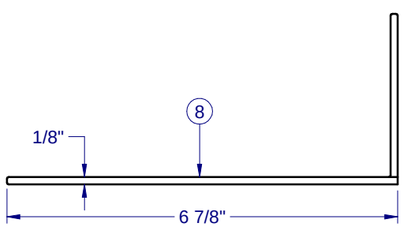

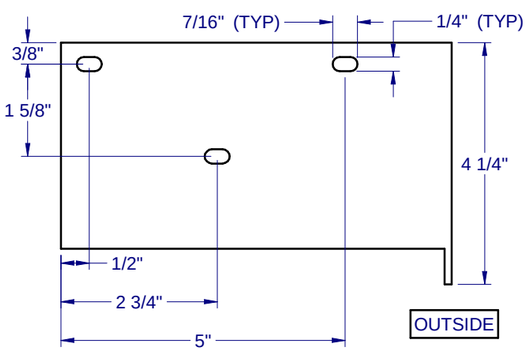

"L" ANGLE 4" MULL CLIP, FIN (LEFT) F-1767-005L
(WOOD CONSTRUCTION ONLY)

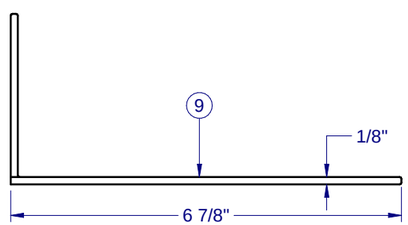

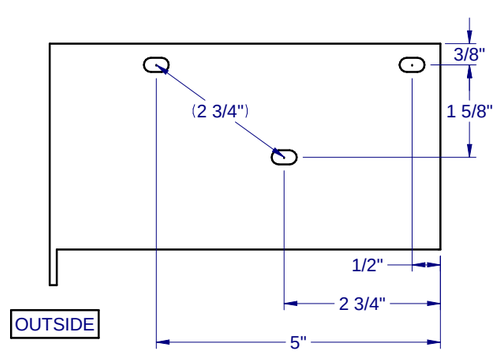

"L" ANGLE 4" MULL CLIP, FIN (RIGHT) F-1767-005R
(WOOD CONSTRUCTION ONLY)

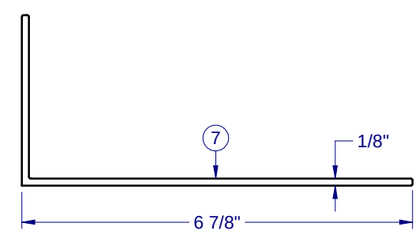

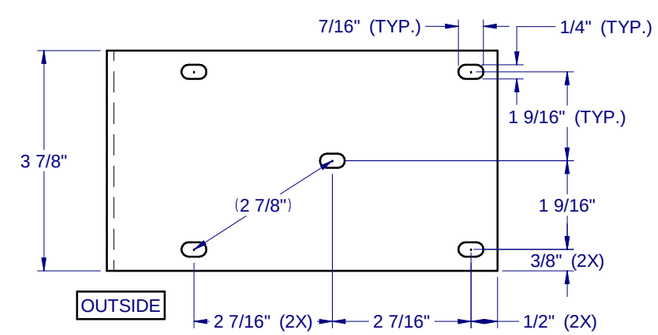

"L" ANGLE 4" MULL CLIP, STANDARD - F-1767-002

CWS
1900 SW 44TH AVE.
OCALA, FLORIDA 34474
WWW.CWS.CC

VMU04

4" PVC MULL BAR IMPACT

PROPRIETARY AND CONFIDENTIAL
THE INFORMATION CONTAINED IN THIS DRAWING IS THE SOLE PROPERTY OF CUSTOM WINDOW SYSTEMS, INC. ANY REPRODUCTION IN PART OR AS A WHOLE WITHOUT THE WRITTEN PERMISSION OF CUSTOM WINDOW SYSTEMS, INC IS PROHIBITED.

FLORIDA APPROVAL NO.:
9520

10/7/2026

LUCAS A. TURNER, P.E.
FL PE # 58201
Turner Engineering & Consulting, Inc.
2428 Old Natchez Trc Trl
Camden, TN 38320
PH. 941-380-1574

SHEET DESCRIPTION:
EXTRUSIONS

DRAWN BY:	DATE:
MCS	9/17/2026
DWG #: CWS-837	REV.: E
SCALE: 1:2	SHEET 5 OF 10

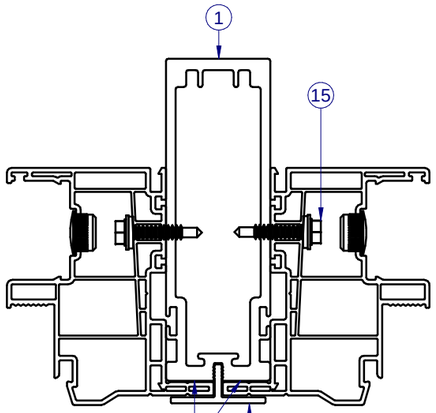

A/6 HORIZONTAL MULL BAR SECTION FLANGE FRAME WINDOW

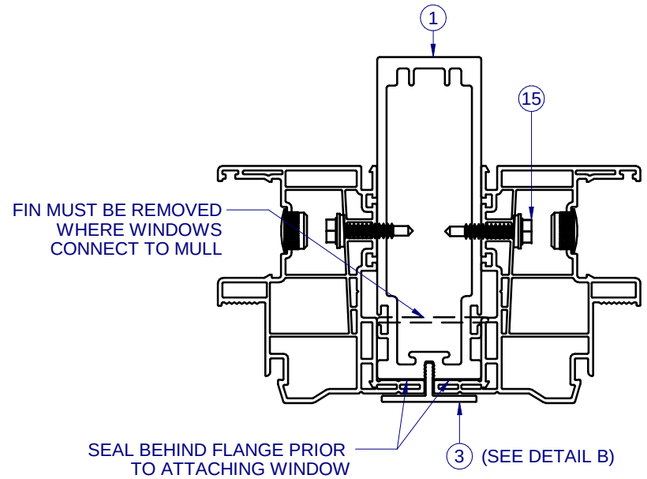

A/6 HORIZONTAL MULL BAR SECTION FIN FRAME WINDOW

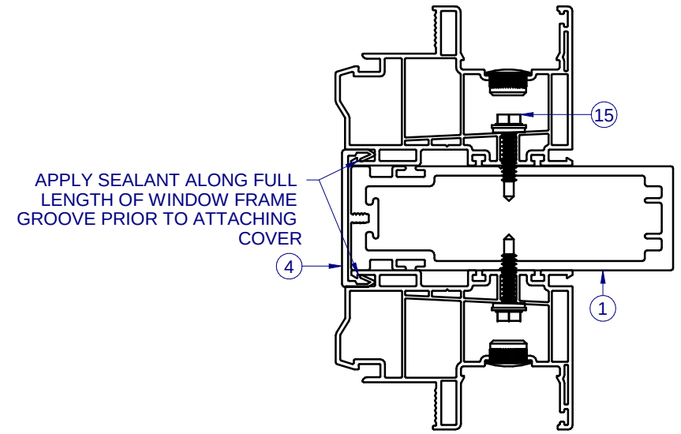

A/6 VERTICAL/HORIZONTAL MULL BAR SECTION BOX FRAME WINDOW

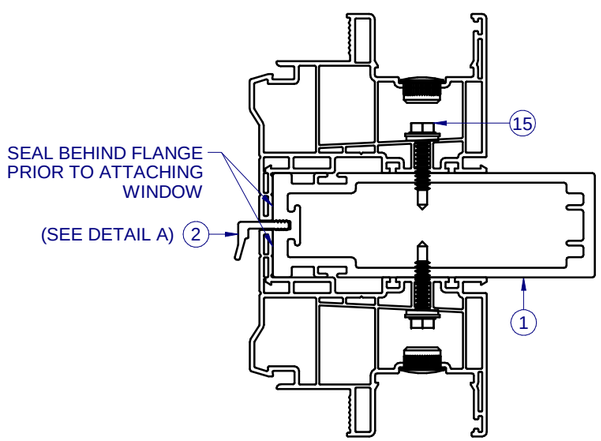

B/6 VERTICAL MULL BAR SECTION FLANGE FRAME WINDOW

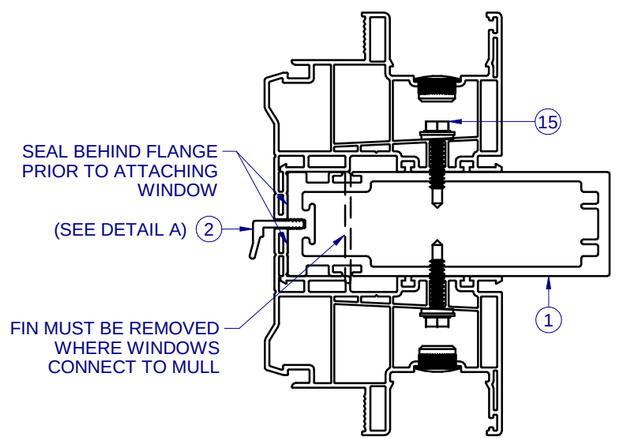

B/6 VERTICAL MULL BAR SECTION FIN FRAME WINDOW

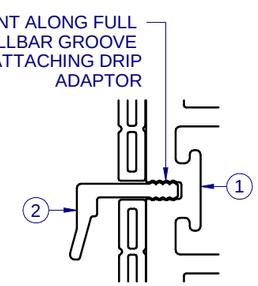

DETAIL A

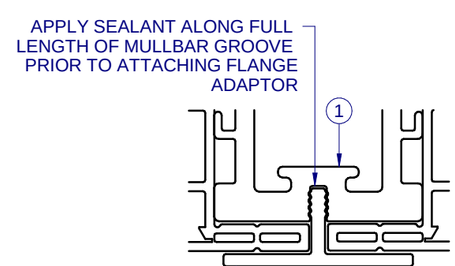

DETAIL B

CWS
1900 SW 44TH AVE.
OCALA, FLORIDA 34474
WWW.CWS.CC

VMU04

4" PVC MULL BAR IMPACT

PROPRIETARY AND CONFIDENTIAL
THE INFORMATION CONTAINED IN THIS DRAWING IS THE SOLE PROPERTY OF CUSTOM WINDOW SYSTEMS, INC. ANY REPRODUCTION IN PART OR AS A WHOLE WITHOUT THE WRITTEN PERMISSION OF CUSTOM WINDOW SYSTEMS, INC IS PROHIBITED.

FLORIDA APPROVAL NO.:
9520

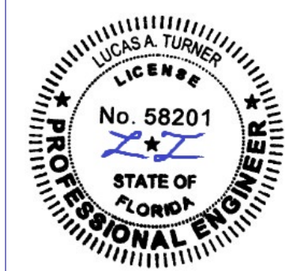

10/7/2026

LUCAS A. TURNER, P.E.
FL PE # 58201
Turner Engineering & Consulting, Inc.
2428 Old Natchez Trc Trl
Camden, TN 38320
PH. 941-380-1574

SHEET DESCRIPTION:
SECTION VIEWS MULLS

DRAWN BY:	DATE:
MCS	9/17/2026
DWG #: CWS-837	REV.: E
SCALE: 1:2	SHEET 6 OF 10

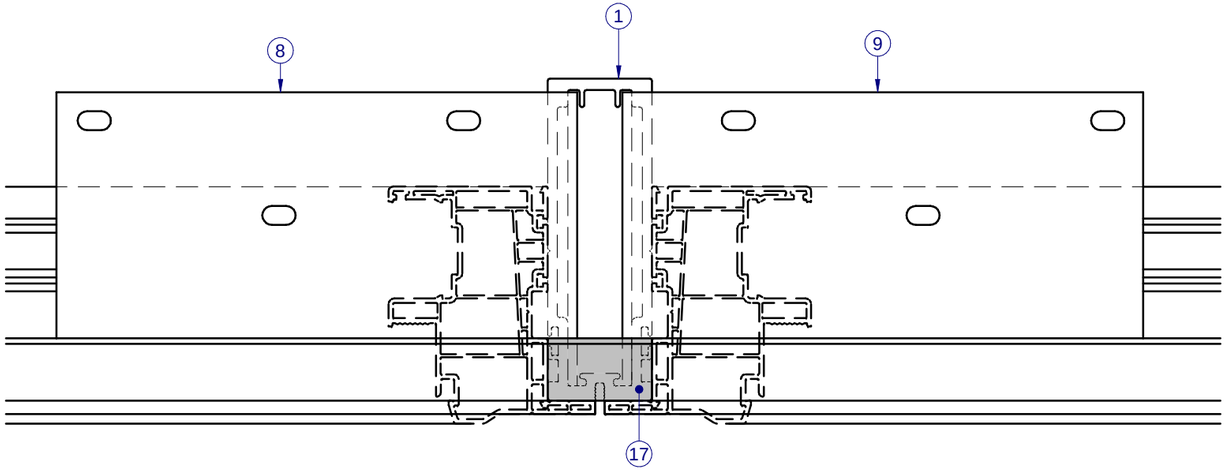

TOP VIEW
FIN FRAME

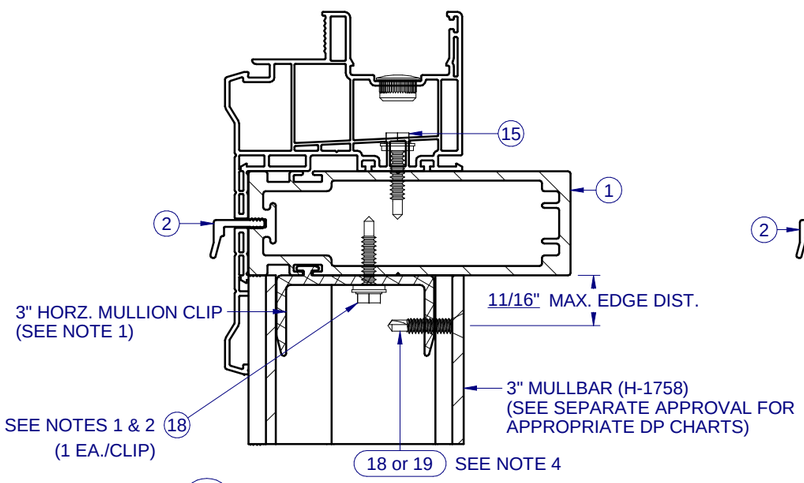

C/7 4" HORIZ. TO 3" VERT. MULLBAR SECTION
FLANGE FRAME WINDOW

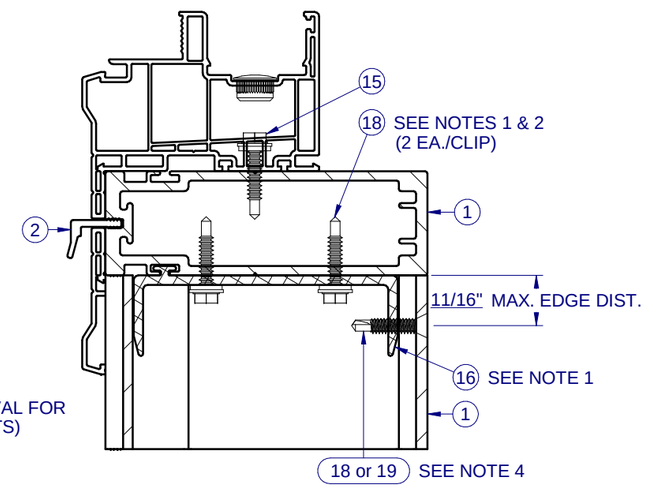

C/7 4" HORIZ. TO 4" VERT. MULLBAR SECTION
FLANGE FRAME WINDOW

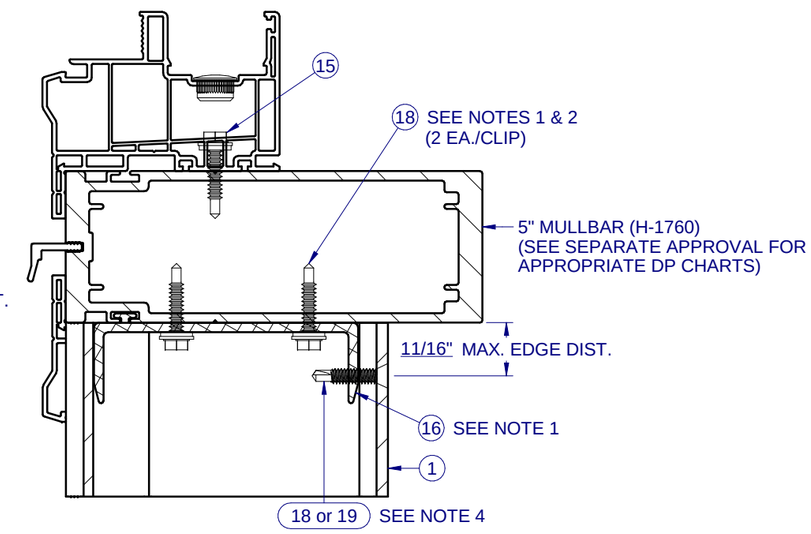

C/7 5" HORIZ. TO 4" VERT. MULLBAR SECTION
FLANGE FRAME WINDOW

NOTES:

1. SLIDE CLIP INTO LOCATION AND SECURE WITH ITEM 18, AS SHOWN ABOVE.
2. PRE-DRILLED HOLES (THRU H/V CLIPS 5117 OR 5118), BY THE INSTALLER, MAY BE LOCATED AS NEEDED WHILE MAINTAINING A MINIMUM CLIP EDGE DISTANCE OF 9/32" AND A MINIMUM CENTER TO CENTER SPACING OF 1/2".
3. THE ABOVE SECTIONS APPLY TO ALL MULLBAR-TO-MULLBAR CONNECTIONS, REGARDLESS OF ORIENTATION (i.e., HORIZONTAL OR VERTICAL). THE FULL LENGTH MULL MUST BE THE SAME DEPTH, OR GREATER, THAN THE INTERSECTING MULL.
4. INTERIOR MULL ANCHOR ATTACHMENT SCREW THRU VERTICAL MULL INTO MULL CLIP. PRE-DRILL PILOT HOLE THRU ALL MATERIAL.
5. REFER TO NOTE 13 ON SHEET 1 FOR ADDITIONAL ANCHOR REQUIREMENTS FOR INSTALLATIONS WITHIN 3,000 FEET OF A SALTWATER COASTLINE.

CWS
1900 SW 44TH AVE.
OCALA, FLORIDA 34474
WWW.CWS.CC

VMU04

4" PVC MULL BAR IMPACT

PROPRIETARY AND CONFIDENTIAL
THE INFORMATION CONTAINED IN THIS DRAWING IS THE SOLE PROPERTY OF CUSTOM WINDOW SYSTEMS, INC. ANY REPRODUCTION IN PART OR AS A WHOLE WITHOUT THE WRITTEN PERMISSION OF CUSTOM WINDOW SYSTEMS, INC IS PROHIBITED.

FLORIDA APPROVAL NO.:
9520

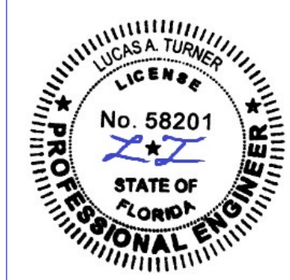

10/7/2026

LUCAS A. TURNER, P.E.
FL PE # 58201
Turner Engineering & Consulting, Inc.
2428 Old Natchez Trc Trl
Camden, TN 38320
PH. 941-380-1574

SHEET DESCRIPTION:
SECTION VIEWS
MULL INTERSECTIONS

DRAWN BY:	DATE:
MCS	9/17/2026
DWG #: CWS-837	REV.: E
SCALE: 1:2	SHEET 7 OF 10

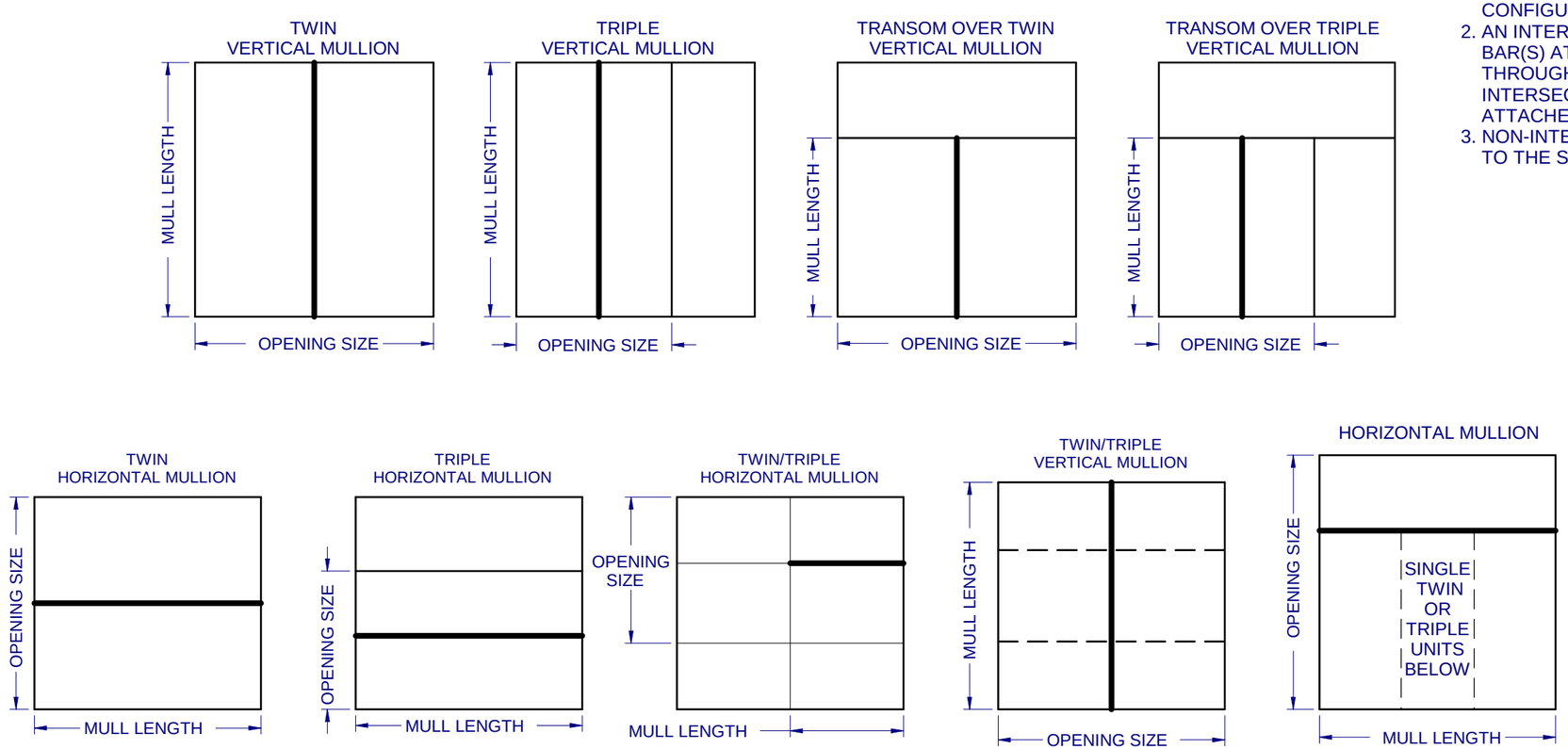

NOTES:

1. THE MULL BAR IN FOCUS FOR ANY GIVEN CONFIGURATION IS SHOWN IN BOLD.
2. AN INTERSECTED MULL BAR HAS OTHER MULL BAR(S) ATTACHED TO IT (SHOWN IN DASHES) THROUGH THE USE OF MULL BAR CLIPS. AN INTERSECTED MULL BAR WILL ALWAYS BE ATTACHED TO THE SUBSTRATE AT BOTH ENDS.
3. NON-INTERSECTED MULL BARS CAN BE ATTACHED TO THE SUBSTRATE AND OTHER MULL BARS.

NOTES:

1. AT MULLION LOCATION, ATTACH WINDOW UNIT(S) TO MULLBAR THRU FRAME AS SPECIFIED IN WINDOW UNIT APPROVAL DOCUMENTS. IF ALUMINUM ATTACHMENT IS NOT SPECIFIED IN THE WINDOW UNIT APPROVAL DOCUMENTS, FOLLOW THE ANCHOR SPACING AS INDICATED IN THE WINDOW APPROVAL FOR ATTACHMENT TO WOOD SUBSTRATE, USING A HEX WASHER HEAD TEK SCREW OF THE SAME SIZE (#10 OR #12) AS THE WOOD SCREW INDICATED IN THE WINDOW APPROVAL. TEK SCREWS SHALL BE LONG ENOUGH TO ENSURE THREE (3) THREADS OF PENETRATION BEYOND THE INSIDE WALL OF MULLBAR.

2. MULL CLIP INSTALLATION ANCHOR TYPE, SIZE, SPACING AND EMBEDMENT SHALL BE AS SPECIFIED IN THESE DRAWINGS, SEE TABLE 1, SHEET 9.

3. ALL MULL CLIP INSTALLATION ANCHORS MUST BE MADE OF OR PROTECTED WITH A CORROSION RESISTANT MATERIAL OR COATING. DISSIMILAR METALS OR MATERIALS IN CONTACT WITH PRESSURE TREATED WOOD MUST BE PROTECTED TO PREVENT REACTION.

4. INSTALLATION ANCHORS SHALL BE IN ACCORDANCE WITH ANCHOR MANUFACTURER'S INSTALLATION INSTRUCTIONS, AND ANCHORS SHALL NOT BE USED IN SUBSTRATES WITH STRENGTHS LESS THAN THE MINIMUM SPECIFIED IN TABLE 1, SHEET 9.

5. ANCHOR EMBEDMENT TO SUBSTRATE SHALL BE BEYOND WALL DRESSING OR STUCCO. FOR CONCRETE/CMU OPENINGS, EMBEDMENT SHALL BE BEYOND WOOD BUCKS, IF USED, INTO SUBSTRATE - 1X BUCKS ARE OPTIONAL.

6. A MINIMUM CENTER-TO-CENTER SPACING SHALL BE MAINTAINED AS INDICATED BY THE PRE-DRILLED HOLES AS SHOWN IN THE CLIP LAYOUTS ON SHEETS 4-5.

7. WOOD OR MASONRY OPENINGS, BUCKS AND BUCK FASTENERS SHALL BE PROPERLY DESIGNED BY THE ARCHITECT OR ENGINEER OF RECORD AND INSTALLED TO TRANSFER WIND LOADS TO THE STRUCTURE. SUBSTRATES SHALL MEET THE MINIMUM STRENGTH REQUIREMENTS AS SHOWN IN TABLE1, SHEET 9. CONCRETE AND MASONRY SUBSTRATES MAY NOT BE CRACKED.

8. SEALING AND FLASHING STRATEGIES FOR OVERALL WATER RESISTANCE OF INSTALLATION SHALL BE DONE BY OTHERS FOLLOWING THE CURRENT VERSION OF THE REFERENCE DOCUMENTS: FMA/AAMA 100(FIN WINDOWS), FMA/AAMA 200(FLANGE WINDOWS), FMA/WDMA 250(BOX WINDOWS), FMA/AAMA/WDMA 300(EXTERIOR DOORS)

CWS
1900 SW 44TH AVE.
OCALA, FLORIDA 34474
WWW.CWS.CC

VMU04

4" PVC MULL BAR IMPACT

PROPRIETARY AND CONFIDENTIAL
THE INFORMATION CONTAINED IN THIS DRAWING IS THE SOLE PROPERTY OF CUSTOM WINDOW SYSTEMS, INC. ANY REPRODUCTION IN PART OR AS A WHOLE WITHOUT THE WRITTEN PERMISSION OF CUSTOM WINDOW SYSTEMS, INC IS PROHIBITED.

FLORIDA APPROVAL NO.:
9520

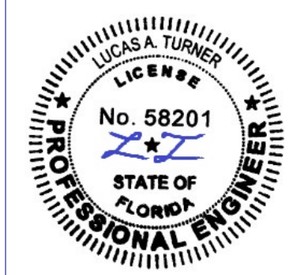

10/7/2026

LUCAS A. TURNER, P.E.
FL PE # 58201
Turner Engineering & Consulting, Inc.
2428 Old Natchez Trc Trl
Camden, TN 38320
PH. 941-380-1574

SHEET DESCRIPTION:
CONFIGURATIONS AND ANCHORAGE NOTES

DRAWN BY:	DATE:
MCS	9/17/2026
DWG #:	REV.:
CWS-837	E
SCALE:	
1:1	SHEET 8 OF 10

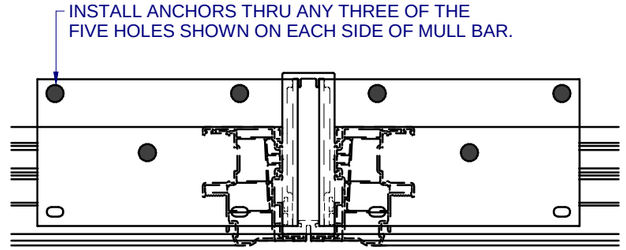

TOP VIEW

MULL CLIP 1767-002 ANCHOR REQUIREMENT

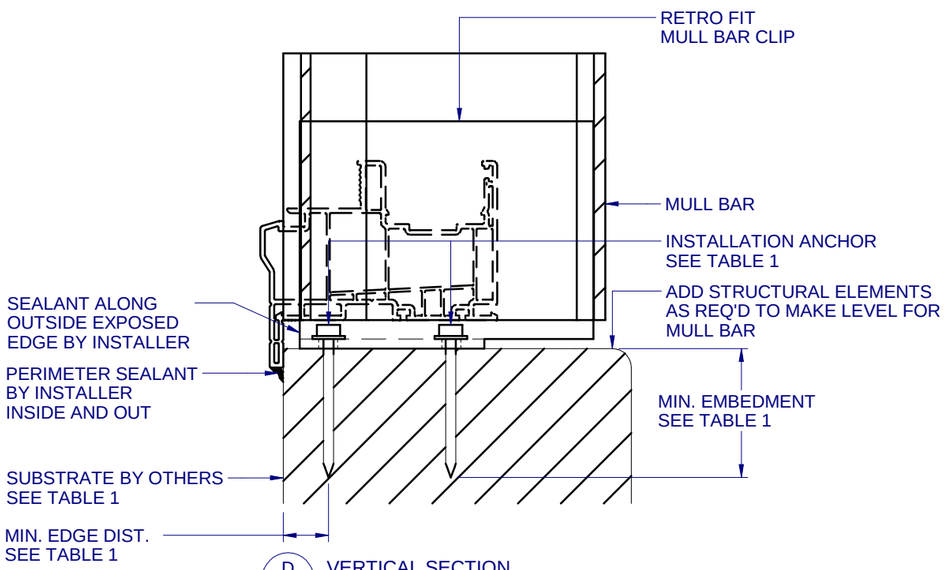

D / 9 VERTICAL SECTION
TYPICAL FLANGE (RETRO FIT) ANCHORAGE
HEAD AND JAMBS SIMILAR FOR FLANGE INSTALLATION

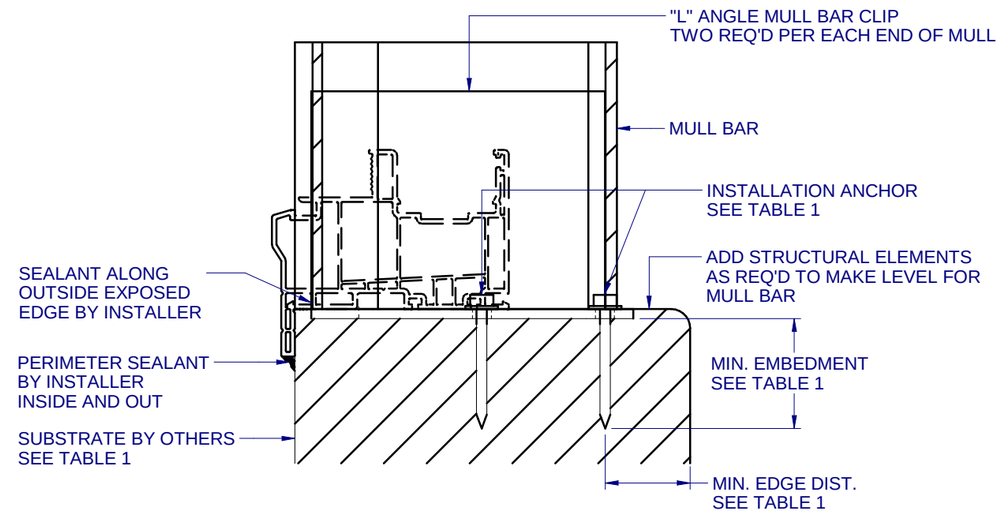

E / 9 VERTICAL SECTION
TYPICAL FLANGE (RETRO FIT) ANCHORAGE
HEAD AND JAMBS SIMILAR FOR FLANGE INSTALLATION

TABLE 1: APPROVED MULL CLIP INSTALLATION FASTENERS

SUBSTRATE TYPE	ANCHOR TYPE	MIN. EMBEDMENT	MIN. EDGE DIST.
CONCRETE (2.0 KSI MIN.)	3/16" ITW TAPCON	1"	3"
CONCRETE (3.05 KSI MIN.)	3/16" DEWALT ULTRACON+	1-3/4"	1"
HOLLOW or GROUT-FILLED CMU (ASTM C-90) or 1767 CLIP INTO SOLID CONCRETE (3.05 KSI MIN.)	1/4" DEWALT ULTRACON+	1-1/4"	2-1/2"
2X MIN. SOUTHERN PINE (G=0.55)	3/16" ITW TAPCON OR DEWALT ULTRACON+	1-3/8"	7/8"
2X MIN. SOUTHERN PINE (G=0.55)	#10 WOOD SCREW	1-3/8"	7/8"
16 GAUGE (0.060") MIN. STEEL STUD (33 KSI YIELD MIN)	#10-16 HILTI KWIK-FLEX OR ITW TEKS SELF-DRILLING SCREW	FULL THREAD THRU 0.060"	7/16"
1/8" ALUM. (6063-T5 MIN.) OR 1/8" STEEL (33 KSI MIN.)	#10 GRADE 5 SELF-TAPPING / DRILLING SCREW	FULL THREAD THRU 0.125"	7/16"

NOTES:

1. BOX FRAME MULL INSTALLATION SIMILAR TO FLANGE FRAME.
2. SILL STOOL MUST BE FLUSH AGAINST INSIDE OF MULLED WINDOWS AFTER INSTALLATION.
3. RECESS RETRO MULLION CLIP 3/8" MAX. FOR CLEARANCE OF WINDOW UNIT AS NEEDED.
4. FOUR (4) ANCHORS REQUIRED PER "T" MULL CLIP, SEE SHEETS 2-3 THREE (3) ANCHORS REQUIRED PER "L" MULL CLIP, SEE SHEETS 2-3.
5. SEAT MULLION TIGHT TO MULL CLIP.
6. FOR ANCHORAGE DETAILS FOR THE WINDOW, REFER TO THE WINDOW SPECIFIC INSTALLATION DETAILS.
7. REFER TO NOTE 13 ON SHEET 1 FOR ADDITIONAL ANCHOR REQUIREMENTS FOR INSTALLATIONS WITHIN 3,000 FEET OF A SALTWATER COASTLINE.

CWS
1900 SW 44TH AVE.
OCALA, FLORIDA 34474
WWW.CWS.CC

VMU04

4" PVC MULL BAR IMPACT

PROPRIETARY AND CONFIDENTIAL
THE INFORMATION CONTAINED IN THIS DRAWING IS THE SOLE PROPERTY OF CUSTOM WINDOW SYSTEMS, INC. ANY REPRODUCTION IN PART OR AS A WHOLE WITHOUT THE WRITTEN PERMISSION OF CUSTOM WINDOW SYSTEMS, INC IS PROHIBITED.

FLORIDA APPROVAL NO.:
9520

10/7/2026

LUCAS A. TURNER, P.E.
FL PE # 58201
Turner Engineering & Consulting, Inc.
2428 Old Natchez Trc Trl
Camden, TN 38320
PH. 941-380-1574

SHEET DESCRIPTION:
INSTALLATION DETAILS FLANGE

DRAWN BY:	DATE:
MCS	9/17/2026
DWG #: CWS-837	REV.: E
SCALE: 1:2	SHEET 9 OF 10

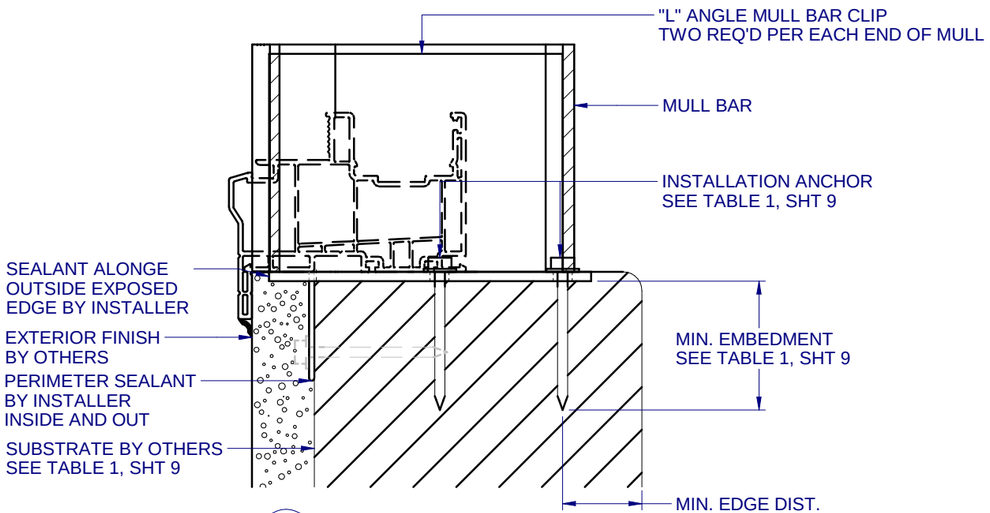

F / 10 VERTICAL SECTION
TYPICAL FIN ("L" ANGLE) ANCHORAGE
HEAD AND JAMBS SIMILAR FOR FIN INSTALLATION

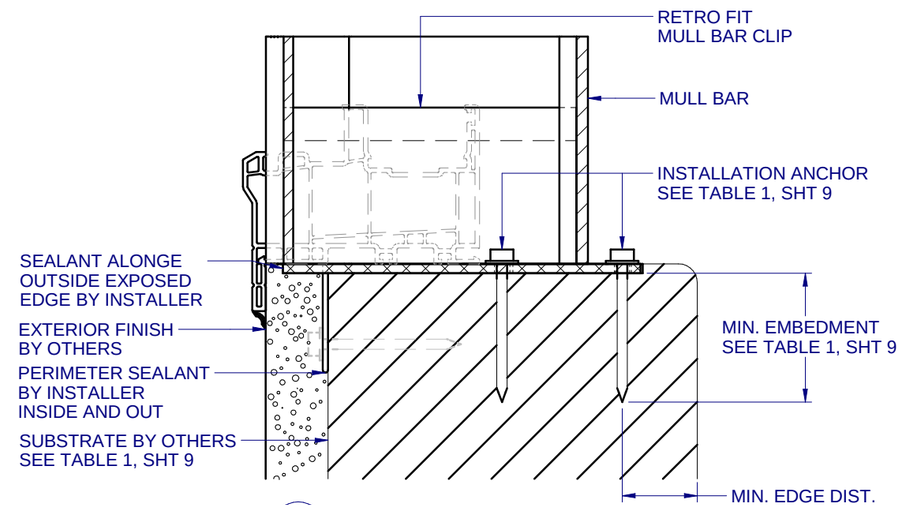

G / 10 VERTICAL SECTION
TYPICAL FIN (RETRO FIT) ANCHORAGE
HEAD AND JAMBS SIMILAR FOR FIN INSTALLATION

NOTES:

1. SILL STOOL MUST BE FLUSH AGAINST INSIDE OF MULLED WINDOWS AFTER INSTALLATION.
2. RECESS RETRO MULLION CLIP 3/8" MAX. FOR CLEARANCE OF WINDOW UNIT AS NEEDED.
3. FOUR (4) ANCHORS REQUIRED PER "T" MULL CLIP, SEE SHEETS 2-3. THREE (3) ANCHORS REQUIRED PER "L" MULL CLIP, SEE SHEETS 2-3.
4. SEAT MULLION TIGHT TO MULL CLIP.
5. FOR ANCHORAGE DETAILS FOR THE WINDOW, REFER TO THE WINDOW SPECIFIC INSTALLATION DETAILS.
6. REFER TO NOTE 13 ON SHEET 1 FOR ADDITIONAL ANCHOR REQUIREMENTS FOR INSTALLATIONS WITHIN 3,000 FEET OF A SALTWATER COASTLINE.

CWS
1900 SW 44TH AVE.
OCALA, FLORIDA 34474
WWW.CWS.CC

VMU04

4" PVC MULL BAR IMPACT

PROPRIETARY AND CONFIDENTIAL
THE INFORMATION CONTAINED IN THIS DRAWING IS THE SOLE PROPERTY OF CUSTOM WINDOW SYSTEMS, INC. ANY REPRODUCTION IN PART OR AS A WHOLE WITHOUT THE WRITTEN PERMISSION OF CUSTOM WINDOW SYSTEMS, INC IS PROHIBITED.

FLORIDA APPROVAL NO.:
9520

10/7/2026

LUCAS A. TURNER, P.E.
FL PE # 58201
Turner Engineering & Consulting, Inc.
2428 Old Natchez Trc Trl
Camden, TN 38320
PH. 941-380-1574

SHEET DESCRIPTION:
INSTALLATION DETAILS FIN

DRAWN BY:	DATE:
MCS	9/17/2026
DWG #: CWS-837	REV.: E
SCALE: 1:2	SHEET 10 OF 10