4" PVC MULL BAR - IMPACT

SHOWN w/DIFFERENT OPTIONS

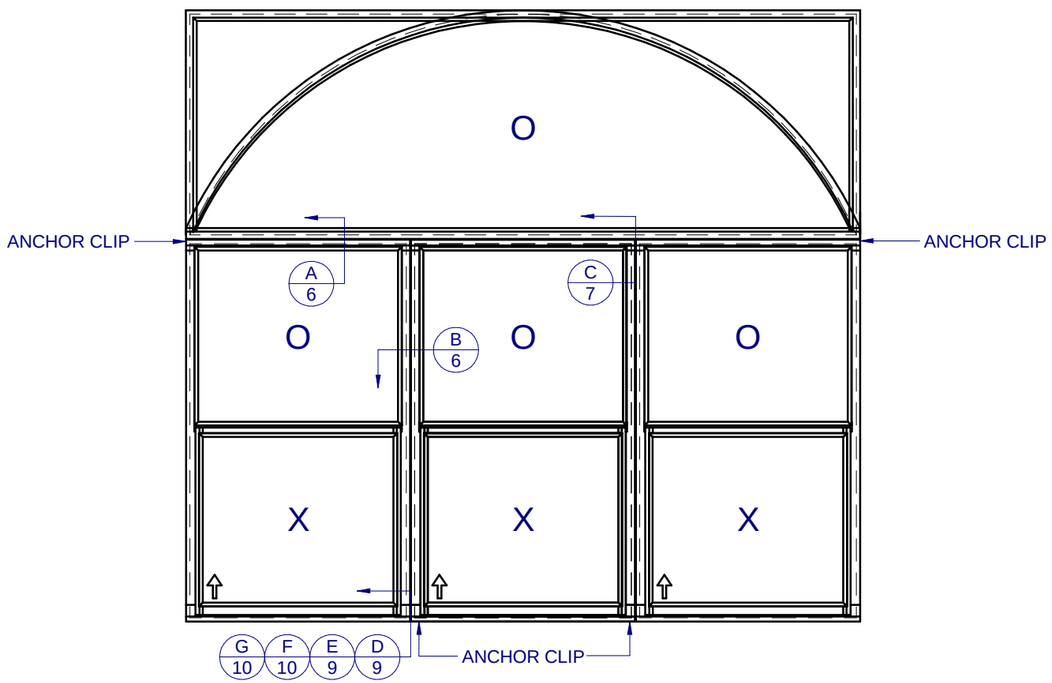

EXAMPLE HORIZ/.VERT. MULLION
FOR SECTION VIEW ONLY

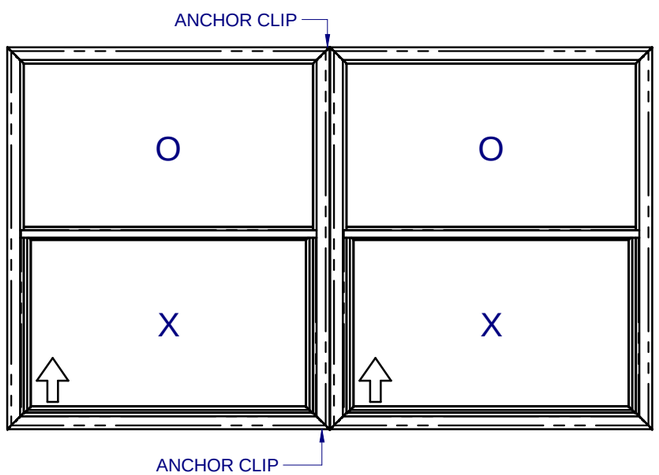

EXAMPLE VERTICAL MULLION FOR
PVC WINDOWS FOR SECTION VIEWS ONLY

TABLE OF CONTENTS

GENERAL NOTES & ELEVATIONS.....1
DP CHARTS.....2-3
BOM & EXTRUSIONS.....4
EXTRUSIONS.....5
SECTION VIEWS.....6-7
CONFIGURATIONS & ANCHOR NOTES.....8
INSTALLATION DETAILS.....9-10

GENERAL NOTES:

1. THE PRODUCT SHOWN HEREIN IS DESIGNED AND MANUFACTURED TO COMPLY WITH THE FLORIDA BUILDING CODE (FBC), CURRENT EDITION AND IS RATED FOR WIND ZONE 3 MISSILE LEVEL D IMPACT USE AS DEFINED IN ASTM E 1996 PER THE FBC. THIS PRODUCT MAY NOT BE USED IN THE HIGH VELOCITY HURRICANE ZONE (HVHZ) OR IN ASTM E 1996 WIND ZONE 4 AREAS.

2. CONFIGURATIONS (SEE SHEET 2): VERTICAL OR HORIZONTAL.

3. SEE MULLION CHARTS FOR MAX. DESIGN PRESSURES AND LENGTH. (REFER TO SHEETS 2-3)

4. ANCHORAGE: THE 33 1/3% STRESS INCREASE HAS NOT BEEN USED IN THE DESIGN OF THIS PRODUCT. SEE SHEETS 9-10 FOR ANCHOR DETAILS. WINDLOAD DURATION FACTOR Cd=1.6 WAS USED FOR WOOD ANCHOR CALCULATIONS.

5. PRODUCT APPROVED FOR IMPACT RESISTANCE. USE OF SHUTTER IS NOT REQUIRED.

6. DESIGN PRESSURE OF MULLED UNITS SHALL BE CONTROLLED BY THE LESSER DESIGN PRESSURE OF THE MULLION OR THE INDIVIDUAL WINDOW UNITS.

7. DESIGN PRESSURES AND INSTALLATION DETAILS SHOWN IN THIS DOCUMENT APPLY ONLY TO THE MULLION. WINDOWS MUST BE APPROVED UNDER SEPARATE APPROVAL.

8. RESPONSIBILITY OF SELECTING FENESTRATION PRODUCTS TO MEET ANY APPLICABLE LOCAL LAWS, BUILDING CODES, ORDINANCES OR OTHER SAFTEY REQUIREMENTS RESTS SOLELY WITH THE ARCHITECT, ENGINEER OF RECORD, BUILDING OWNER OR CONTRACTOR.

9. SINGLE UNITS TO BE MULLED ARE NOT LIMITED TO THOSE SHOWN IN THIS DRAWING. SINGLE UNITS TO BE MULLED TOGETHER MUST BE MANUFACTURED BY CUSTOM WINDOW SYSTEMS, INC. AND MUST BE MADE OUT OF VINYL PVC OR EXTRUDED ALUMINUM.

10. VERTICAL MULLED UNITS MAY BE MULLED INDEFINITELY AS LONG AS THE SINGLE UNIT WIDTH AND HEIGHT ARE NOT EXCEEDED, AND MULLIONS ARE ANCHORED AS SHOWN HERE IN.

11. HORIZONTAL MULLION SHALL EXTEND THE ENTIRE WIDTH OF THE MULLED UNIT. VERTICAL MULLION IS USED TO MULL SIDE BY SIDE UNITS TOGETHER.

12. DESIGN LOADS ARE BASED ON ALLOWABLE STRESS DESIGN, ASD.

13. FOR INSTALLATIONS WITHIN 3,000 FEET OF A SALTWATER COASTLINE, ANCHORAGE MUST BE REVIEWED FOR COMPLIANCE WITH FBC SECTION 1711 OR SECTION R332 OF THE FLORIDA RESIDENTIAL CODE. REFER TO THE CORRESPONDING EVALUATION REPORT OF THIS APPROVAL FOR ADDITIONAL INFORMATION.

Lucas Turner
2026.10.08
09:27:54
-05'00'

CWS
1900 SW 44TH AVE.
OCALA, FLORIDA 34474
WWW.CWS.CC

VMU04

4" PVC MULL BAR IMPACT

PROPRIETARY AND CONFIDENTIAL
THE INFORMATION CONTAINED IN THIS DRAWING IS THE SOLE PROPERTY OF CUSTOM WINDOW SYSTEMS, INC. ANY REPRODUCTION IN PART OR AS A WHOLE WITHOUT THE WRITTEN PERMISSION OF CUSTOM WINDOW SYSTEMS, INC IS PROHIBITED.

FLORIDA APPROVAL NO.:
9520

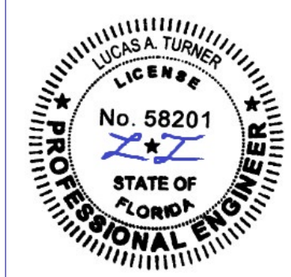

10/7/2026

LUCAS A. TURNER, P.E.
FL PE # 58201
Turner Engineering & Consulting, Inc.
2428 Old Natchez Trc Trl
Camden, TN 38320
PH. 941-380-1574

SHEET DESCRIPTION:
GENERAL NOTES AND ELEVATIONS

DRAWN BY:	DATE:
MCS	9/18/2026
DWG #:	REV.:
CWS-1208	A
SCALE:	
1:25	SHEET 1 OF 10

DESIGN PRESSURE CHART (PSF) FOR IMPACT ALUMINUM 4" MULLION H-1759, HORIZONTAL OR VERTICAL, WITH 1522 or 1767 CLIPS USING FOUR (4) #10 SCREWS IN WOOD or METAL, 3/16" ITW TAPCONS or DEWALT ULTRACON+ INTO SOLID CONCRETE WITH WASHERS PER CLIP. HOLLOW OR GROUT-FILLED BLOCK REQUIRES FOUR (4) 1/4" DEWALT ULTRACON+ WITH THE 1767 CLIP.

MULL LENGTH (in.)	OPENING WIDTH (in.)															
	39	45	51	57	63	69	75	81	87	93	99	106 3/8	114	120	132	144
37	120	120	120	120	120	120	120	120	120	120	118	110	103	98	90	83
42 3/4	120	120	120	120	120	120	120	120	114	107	101	95	89	85	77	71
48 3/4	120	120	120	120	120	120	113	106	99	93	88	82	77	74	67	62
53 1/8	120	120	120	120	120	111	103	96	90	85	80	75	70	67	61	57
57	120	120	120	120	111	103	95	89	84	79	74	70	65	62	57	53
63	120	120	119	108	99	92	85	80	75	71	67	62	59	56	51	47
66 3/4	120	120	111	101	93	86	80	75	70	66	63	59	55	53	48	44
72	120	112	101	93	85	79	73	69	65	61	58	54	51	48	44	41
76	119	105	95	87	80	74	69	65	61	57	54	51	48	46	42	39
80	112	99	89	82	75	70	65	61	57	54	51	48	45	43	40	37
84	106	94	84	77	71	66	62	58	54	51	48	45	43	41	37	35
90	98	86	78	71	65	61	57	53	50	47	45	42	40	38	35	32
96	91	80	72	66	61	56	53	49	46	44	42	39	37	35	32	30
102	85	75	67	61	56	52	49	46	43	41	39	37	34	33	30	28
106 3/8	81	72	64	58	54	50	47	44	41	39	37	35	33	31	29	27
114	75	66	59	54	50	46	43	40	38	36	34	32	30	29	27	25
120	71	63	56	51	46	42	39	37	34	32	31	29	27	25	23	21
126	63	55	49	44	40	36	34	31	29	28	26	25	23	22	20	18
132	55	48	42	38	34	32	29	27	26	24	23	21	20	19	17	16
138	48	42	37	33	30	28	26	24	22	21	20	19	17	17	15	-
144	42	37	32	29	26	24	22	21	20	18	17	16	15	-	-	-
150	37	32	29	26	23	21	20	18	17	16	15	-	-	-	-	-
156	33	29	25	23	21	19	18	16	15	-	-	-	-	-	-	-
160	31	27	24	21	19	18	16	15	-	-	-	-	-	-	-	-

DP CHART IS FOR:
IMPACT 4" MULLION 1759, HORIZONTAL OR VERTICAL, USING EITHER (PER END):
1522 or 1767 CLIPS
- (4) #10 SCREWS INTO WOOD or METAL
- (4) 3/16" ITW TAPCONS or DEWALT ULTRACON+ INTO SOLID CONCRETE or WOOD

1767 CLIPS
- (4) 1/4" DEWALT ULTRACON+ INTO HOLLOW or GROUT-FILLED BLOCK

NOTE: REFER TO NOTE 13 ON SHEET 1 FOR ADDITIONAL ANCHOR REQUIREMENTS FOR INSTALLATIONS WITHIN 3,000 FEET OF A SALTWATER COASTLINE

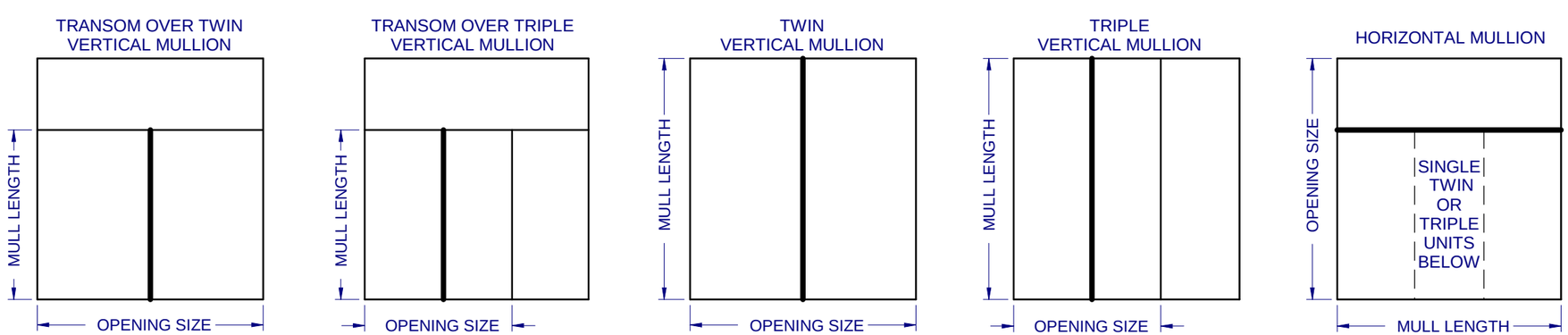

CWS
1900 SW 44TH AVE.
OCALA, FLORIDA 34474
WWW.CWS.CC

VMU04

4" PVC MULL BAR IMPACT

PROPRIETARY AND CONFIDENTIAL
THE INFORMATION CONTAINED IN THIS DRAWING IS THE SOLE PROPERTY OF CUSTOM WINDOW SYSTEMS, INC. ANY REPRODUCTION IN PART OR AS A WHOLE WITHOUT THE WRITTEN PERMISSION OF CUSTOM WINDOW SYSTEMS, INC IS PROHIBITED.

FLORIDA APPROVAL NO.:
9520

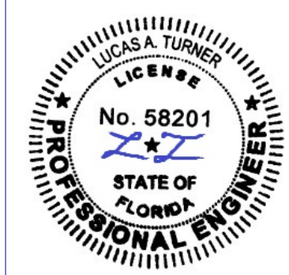

10/7/2026

LUCAS A. TURNER, P.E.
FL PE # 58201
Turner Engineering & Consulting, Inc.
2428 Old Natchez Trc Trl
Camden, TN 38320
PH. 941-380-1574

SHEET DESCRIPTION:
DP CHARTS
1522 or 1767 CLIP
4 ANCHORS

DRAWN BY:	DATE:
MCS	9/18/2026
DWG #: CWS-1208	REV.: A
SCALE: 1:1	SHEET 2 OF 10

DESIGN PRESSURE CHART (PSF) FOR IMPACT ALUMINUM 4" MULLION H-1759, HORIZONTAL OR VERTICAL, WITH 1767 CLIPS USING SIX (6) #10 SCREWS INTO WOOD or METAL, 3/16" ITW TAPCONS or DEWALT ULTRACON+ INTO SOLID CONCRETE or 1/4" DEWALT ULTRACON+ INTO HOLLOW OR GROUT-FILLED BLOCK WITH WASHERS PER EACH END OF MULLION

MULL LENGTH (in.)	OPENING WIDTH (in.)															
	39	45	51	57	63	69	75	81	87	93	99	106 3/8	114	120	132	144
37	120	120	120	120	120	120	120	120	120	120	120	120	120	120	120	120
42 3/4	120	120	120	120	120	120	120	120	120	120	120	120	120	120	115	106
48 3/4	120	120	120	120	120	120	120	120	120	120	120	120	115	110	100	92
53 1/8	120	120	120	120	120	120	120	120	120	120	119	112	105	100	91	84
57	120	120	120	120	120	120	120	120	120	117	111	104	97	93	85	78
63	120	120	120	120	120	120	120	119	111	105	99	93	87	83	76	70
66 3/4	120	120	120	120	120	120	119	111	104	98	93	87	82	78	72	66
72	120	120	120	120	120	117	109	102	96	91	86	80	75	72	66	61
76	120	120	120	120	119	110	103	96	90	85	81	76	71	68	62	58
80	120	120	120	120	112	104	97	91	85	80	76	71	67	64	59	54
84	120	120	120	115	106	98	92	86	81	76	72	68	64	61	56	52
90	120	120	116	106	98	91	84	79	75	70	67	63	59	56	52	48
96	120	120	107	98	90	84	78	73	68	64	60	56	52	50	45	42
102	120	104	92	83	76	70	65	61	57	53	50	47	44	41	38	35
106 3/8	105	92	81	73	67	61	57	53	50	47	44	41	38	37	33	31
114	85	74	66	59	54	50	46	43	40	38	36	33	31	30	27	25
120	73	64	56	51	46	42	39	37	34	32	31	29	27	25	23	21
126	63	55	49	44	40	36	34	31	29	28	26	25	23	22	20	18
132	55	48	42	38	34	32	29	27	26	24	23	21	20	19	17	16
138	48	42	37	33	30	28	26	24	22	21	20	19	17	17	15	-
144	42	37	32	29	26	24	22	21	20	18	17	16	15	-	-	-
150	37	32	29	26	23	21	20	18	17	16	15	-	-	-	-	-
156	33	29	25	23	21	19	18	16	15	-	-	-	-	-	-	-
160	31	27	24	21	19	18	16	15	-	-	-	-	-	-	-	-

DP CHART IS FOR:
IMPACT 4" MULLION 1759, HORIZONTAL OR VERTICAL, USING EITHER (PER END):
1767 CLIPS
- (6) #10 SCREWS INTO WOOD or METAL
- (6) 3/16" ITW TAPCONS or DEWALT ULTRACON+ INTO SOLID CONCRETE or WOOD
- (6) 1/4" DEWALT ULTRACON+ INTO HOLLOW or GROUT-FILLED BLOCK

NOTE: REFER TO NOTE 13 ON SHEET 1 FOR ADDITIONAL ANCHOR REQUIREMENTS FOR INSTALLATIONS WITHIN 3,000 FEET OF A SALTWATER COASTLINE

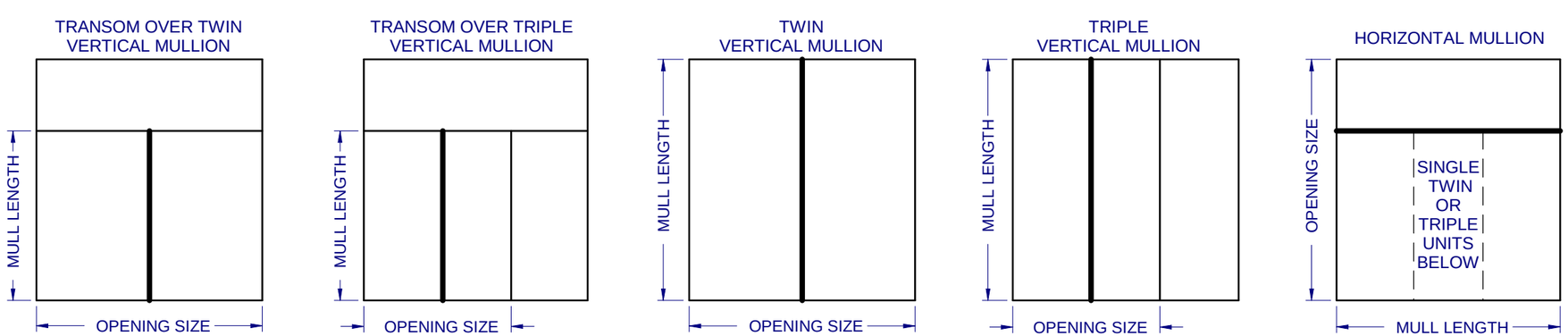

CWS
1900 SW 44TH AVE.
OCALA, FLORIDA 34474
WWW.CWS.CC

VMU04

4" PVC MULL BAR IMPACT

PROPRIETARY AND CONFIDENTIAL
THE INFORMATION CONTAINED IN THIS DRAWING IS THE SOLE PROPERTY OF CUSTOM WINDOW SYSTEMS, INC. ANY REPRODUCTION IN PART OR AS A WHOLE WITHOUT THE WRITTEN PERMISSION OF CUSTOM WINDOW SYSTEMS, INC IS PROHIBITED.

FLORIDA APPROVAL NO.:
9520

LUCAS A. TURNER
LICENSE
No. 58201
STATE OF FLORIDA
PROFESSIONAL ENGINEER

10/7/2026

LUCAS A. TURNER, P.E.
FL PE # 58201
Turner Engineering & Consulting, Inc.
2428 Old Natchez Trc Trl
Camden, TN 38320
PH. 941-380-1574

SHEET DESCRIPTION:
DP CHARTS
1767 CLIP
6 ANCHORS

DRAWN BY:	DATE:
MCS	9/18/2026
DWG #: CWS-1208	REV.: A
SCALE: 1:1	SHEET 3 OF 10

ITEM	PART #	DESCRIPTION
1	H-1759	MULL, 1 3/8" x 4", FLAT, PVC
2	S-1895	DRIP ADAPTER
3	S-1896	FLANGE ADAPTER
4	S-6018	MULL COVER, FIN/BOX, EXTERIOR
5	F-1522-014	RETRO FIT MULL ANCHOR CLIP, FLANGE/BOX
6	F-1522-027	RETRO FIT MULL ANCHOR CLIP, FIN
7	F-1767-002	L-ANGLE 4" MULL CLIP, FLANGE/BOX
8	F-1767-005L	L-ANGLE 4" MULL CLIP, FIN, LEFT
9	F-1767-005R	L-ANGLE 4" MULL CLIP, FIN, RIGHT
10	F-1767-007L	L-ANGLE 4" MULL CLIP, RETRO FLANGE/BOX, LEFT
11	F-1767-007R	L-ANGLE 4" MULL CLIP, RETRO FLANGE/BOX, RIGHT
12		#10 x 1 1/2", PANHEAD PHILIPS ZINC
13		#10 FLAT WASHER
14		CAULK
15		#10 OR #12 HEX WASHER HEAD TEK SCREW *(see note below)
16	P-5118	4" HORIZ. MULLION CLIP, PVC, INTERSECTING
18		#10 HEX WASHER HEAD TEK SCREW

FRAME TYPE	OPENING	"T" MULLBAR CLIP (F-1522-XXX)	"L" MULLBAR CLIP (F-1767-XXX)
FLANGE	NEW	NOT RECOMMENDED	F-1767-002
	RETRO	F-1522-014	F-1767-007(L&R) or F-1767-002
FIN	NEW	F-1522-027	F-1767-005(L&R)
	RETRO	F-1522-027	F-1767-005(L&R)
BOX	NEW	NOT RECOMMENDED	F-1767-002
	RETRO	F-1522-014	F-1767-007(L&R) or F-1767-002

* USE WOOD SCREW SIZE (#10 OR #12), SPECIFIED IN WINDOW UNIT APPROVAL DOCUMENT

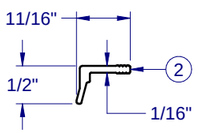

DRIP ADAPTER S-1895

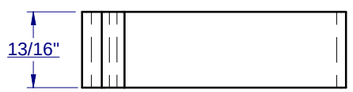

TOP VIEW

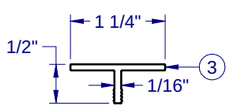

FLANGE ADAPTER S-1896

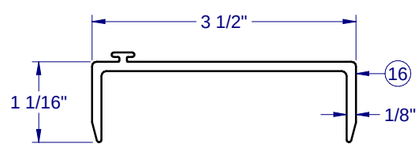

4" HORIZ. MULLION CLIP P-5118

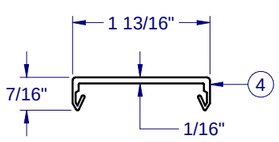

PVC MULL COVER-6018

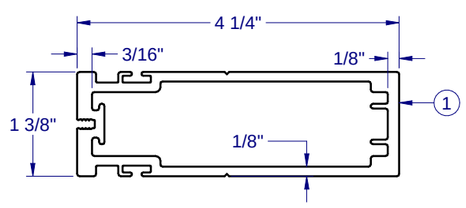

4" MULLBAR H-1759

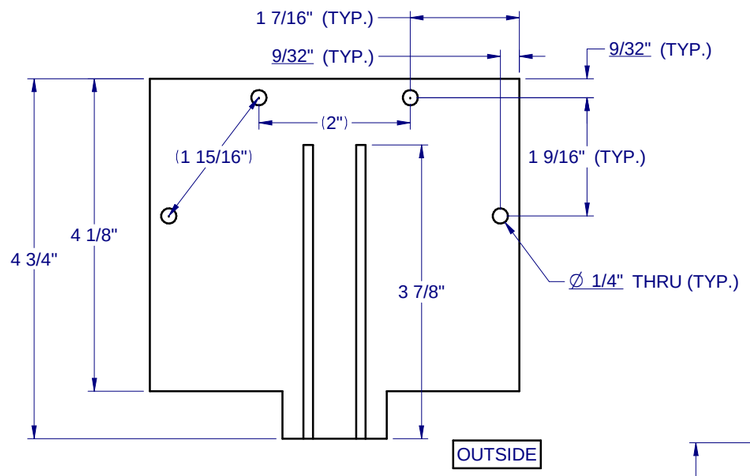

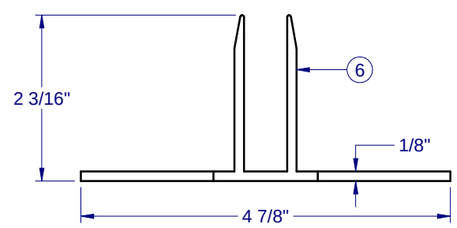

RETRO CLIP (4") F-1522-027

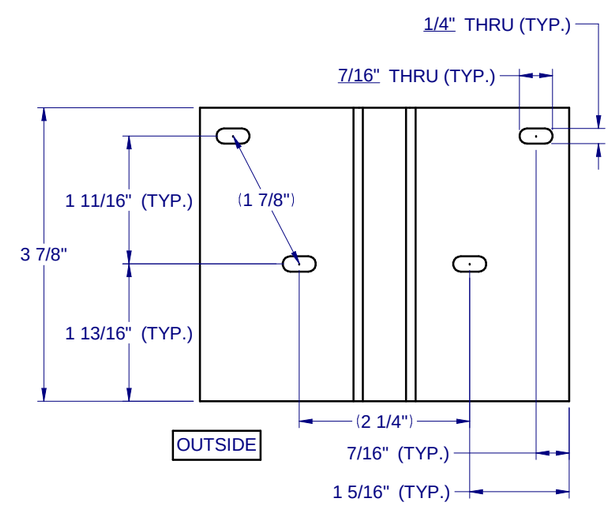

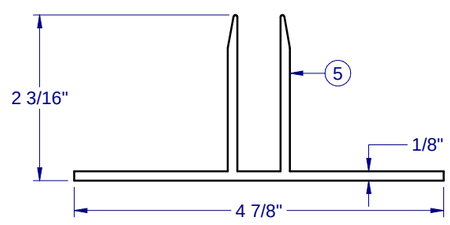

RETRO CLIP (4") F-1522-014

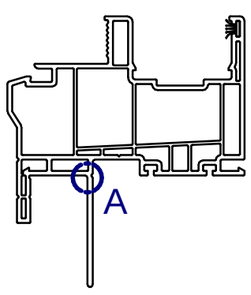

TYP. FIN FRAME

SCORE, BEND AND BREAK TO REMOVE FIN FOR FRAME ATTACHMENT TO MULL BAR

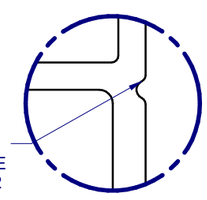

DETAIL A
3:1

NOTE: ALL EXTRUSIONS ARE ALUMINUM 6063-T6 UNLESS OTHERWISE NOTED.

CWS
1900 SW 44TH AVE.
OCALA, FLORIDA 34474
WWW.CWS.CC

VMU04

4" PVC MULL BAR IMPACT

PROPRIETARY AND CONFIDENTIAL
THE INFORMATION CONTAINED IN THIS DRAWING IS THE SOLE PROPERTY OF CUSTOM WINDOW SYSTEMS, INC. ANY REPRODUCTION IN PART OR AS A WHOLE WITHOUT THE WRITTEN PERMISSION OF CUSTOM WINDOW SYSTEMS, INC IS PROHIBITED.

FLORIDA APPROVAL NO.:
9520

10/7/2026

LUCAS A. TURNER, P.E.
FL PE # 58201
Turner Engineering & Consulting, Inc.
2428 Old Natchez Trc Trl
Camden, TN 38320
PH. 941-380-1574

SHEET DESCRIPTION:
BOM AND EXTRUSIONS

DRAWN BY:	DATE:
MCS	9/18/2026
DWG #: CWS-1208	REV.: A
SCALE: 1:2	SHEET 4 OF 10

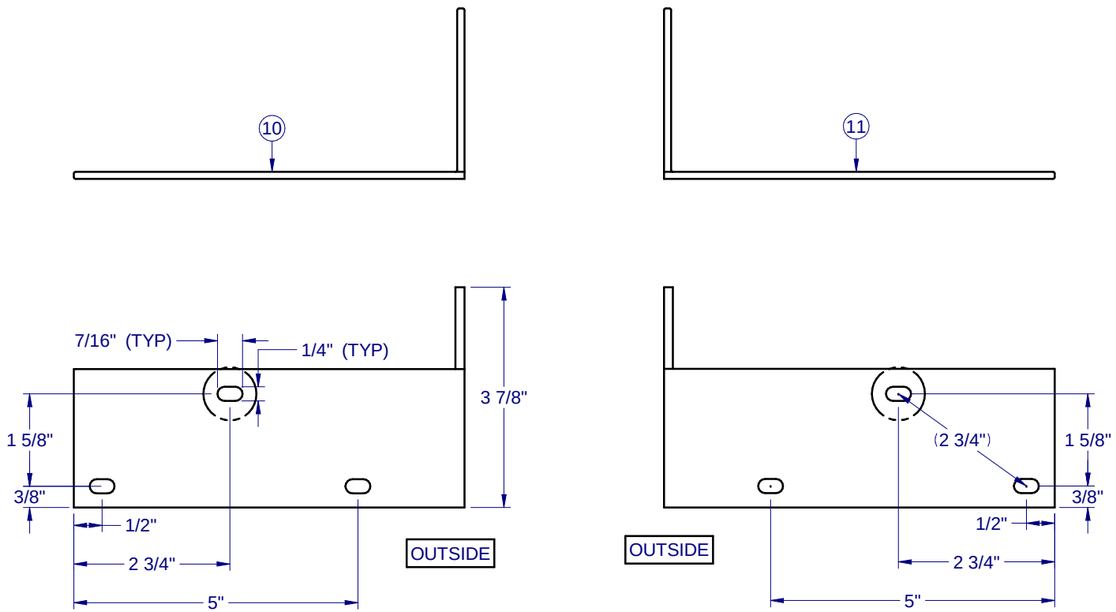

"L" ANGLE 4" MULL CLIP, RETRO FLG (LEFT) F-1767-007L

"L" ANGLE 4" MULL CLIP, RETRO FLG (RIGHT) F-1767-007R

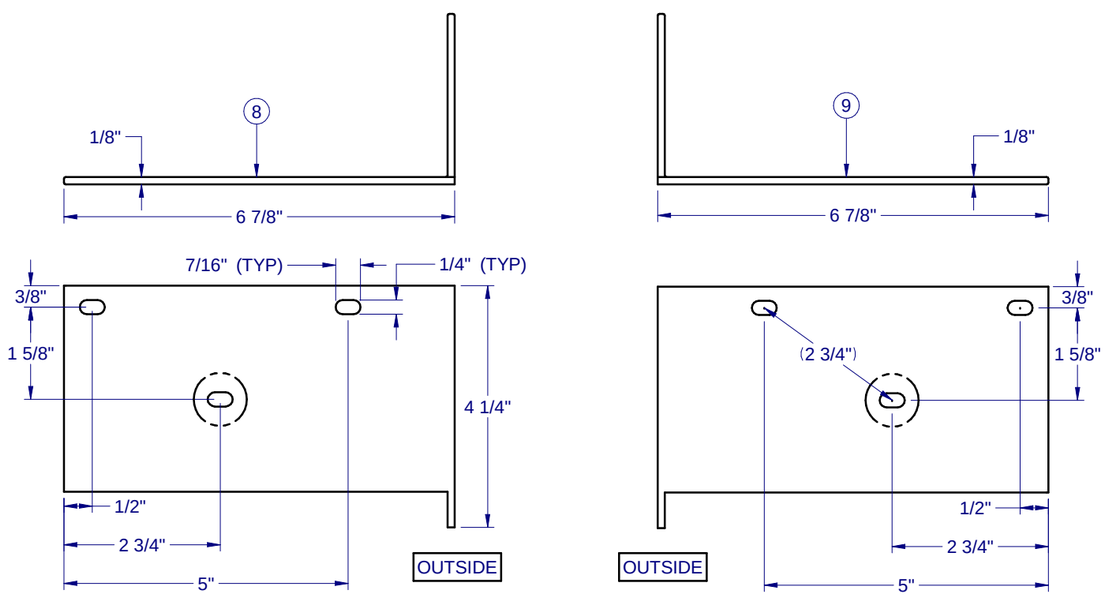

"L" ANGLE 4" MULL CLIP, FIN (LEFT) F-1767-005L
(WOOD CONSTRUCTION ONLY)

"L" ANGLE 4" MULL CLIP, FIN (RIGHT) F-1767-005R
(WOOD CONSTRUCTION ONLY)

FRAME TYPE	OPENING	"T" MULLBAR CLIP (F-1522-XXX)	"L" MULLBAR CLIP (F-1767-XXX)
FLANGE	NEW	NOT RECOMMENDED	F-1767-002
	RETRO	F-1522-014	F-1767-007(L&R) or F-1767-002
FIN	NEW	F-1522-027	F-1767-005(L&R)
	RETRO	F-1522-027	F-1767-005(L&R)
BOX	NEW	NOT RECOMMENDED	F-1767-002
	RETRO	F-1522-014	F-1767-007(L&R) or F-1767-002

NOTE: IF USING CLIPS WHICH REQ. FOUR (4) ANCHORS PER END (REFER TO SHEET 2), THE MIDDLE HOLE (CIRCLED) MUST BE USED WITH ANY OTHER HOLE AS REQ'D PER EDGE DISTANCE.

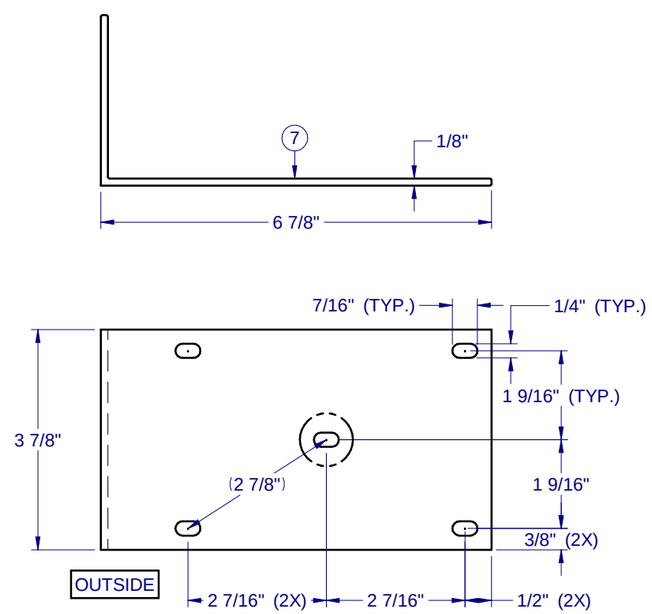

"L" ANGLE 4" MULL CLIP, STANDARD - F-1767-002

CWS
1900 SW 44TH AVE.
OCALA, FLORIDA 34474
WWW.CWS.CC

VMU04

4" PVC MULL BAR IMPACT

PROPRIETARY AND CONFIDENTIAL
THE INFORMATION CONTAINED IN THIS DRAWING IS THE SOLE PROPERTY OF CUSTOM WINDOW SYSTEMS, INC. ANY REPRODUCTION IN PART OR AS A WHOLE WITHOUT THE WRITTEN PERMISSION OF CUSTOM WINDOW SYSTEMS, INC IS PROHIBITED.

FLORIDA APPROVAL NO.:
9520

10/7/2026

LUCAS A. TURNER, P.E.
FL PE # 58201
Turner Engineering & Consulting, Inc.
2428 Old Natchez Trc Trl
Camden, TN 38320
PH. 941-380-1574

SHEET DESCRIPTION:
EXTRUSIONS

DRAWN BY:	DATE:
MCS	9/18/2026
DWG #: CWS-1208	REV.: A
SCALE: 1:2	SHEET 5 OF 10

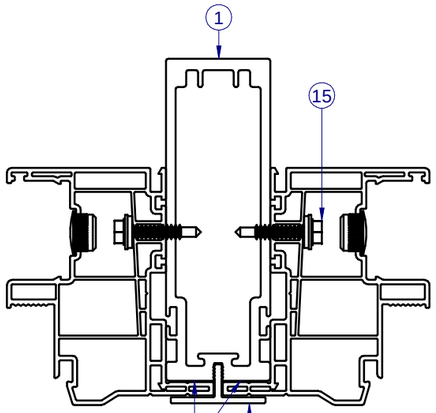

A/6 HORIZONTAL MULL BAR SECTION FLANGE FRAME WINDOW

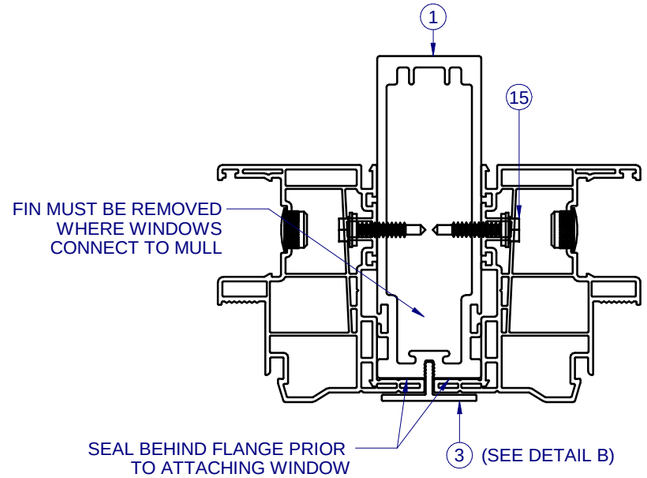

A/6 HORIZONTAL MULL BAR SECTION FIN FRAME WINDOW

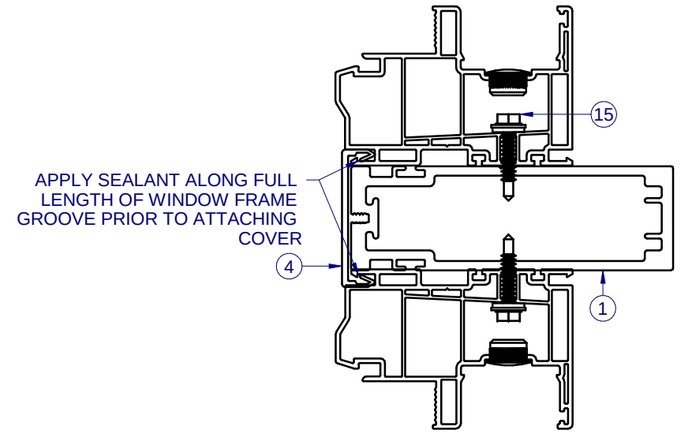

A/6 VERTICAL/HORIZONTAL MULL BAR SECTION BOX FRAME WINDOW

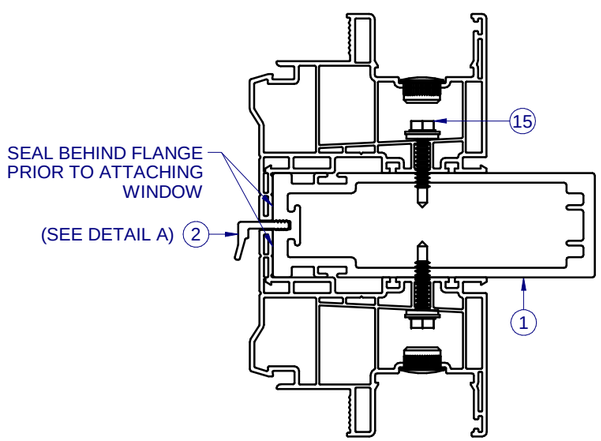

B/6 VERTICAL MULL BAR SECTION FLANGE FRAME WINDOW

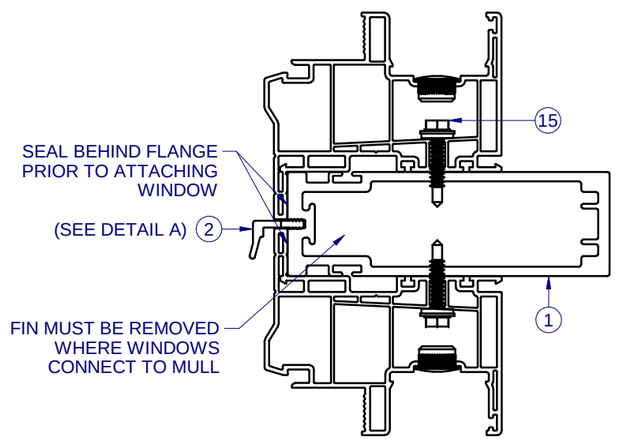

B/6 VERTICAL MULL BAR SECTION FIN FRAME WINDOW

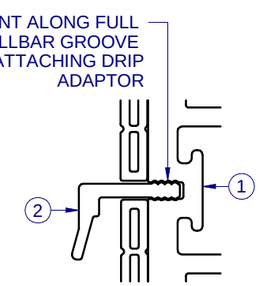

DETAIL A

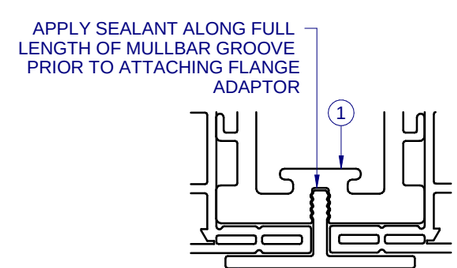

DETAIL B

CWS
1900 SW 44TH AVE.
OCALA, FLORIDA 34474
WWW.CWS.CC

VMU04

4" PVC MULL BAR IMPACT

PROPRIETARY AND CONFIDENTIAL
THE INFORMATION CONTAINED IN THIS DRAWING IS THE SOLE PROPERTY OF CUSTOM WINDOW SYSTEMS, INC. ANY REPRODUCTION IN PART OR AS A WHOLE WITHOUT THE WRITTEN PERMISSION OF CUSTOM WINDOW SYSTEMS, INC IS PROHIBITED.

FLORIDA APPROVAL NO.:
9520

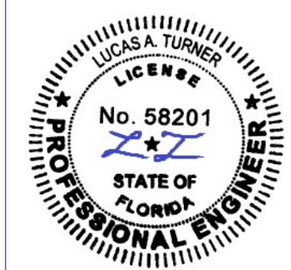

10/7/2026

LUCAS A. TURNER, P.E.
FL PE # 58201
Turner Engineering & Consulting, Inc.
2428 Old Natchez Trc Trl
Camden, TN 38320
PH. 941-380-1574

SHEET DESCRIPTION:
SECTION VIEWS MULLS

DRAWN BY:	DATE:
MCS	9/18/2026
DWG #: CWS-1208	REV.: A
SCALE: 1:2	SHEET 6 OF 10

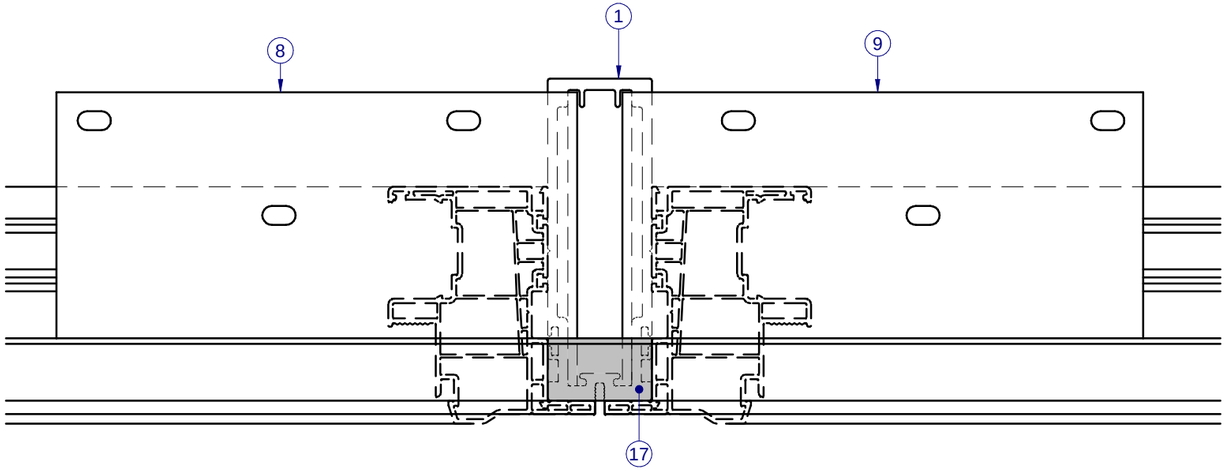

TOP VIEW
FIN FRAME

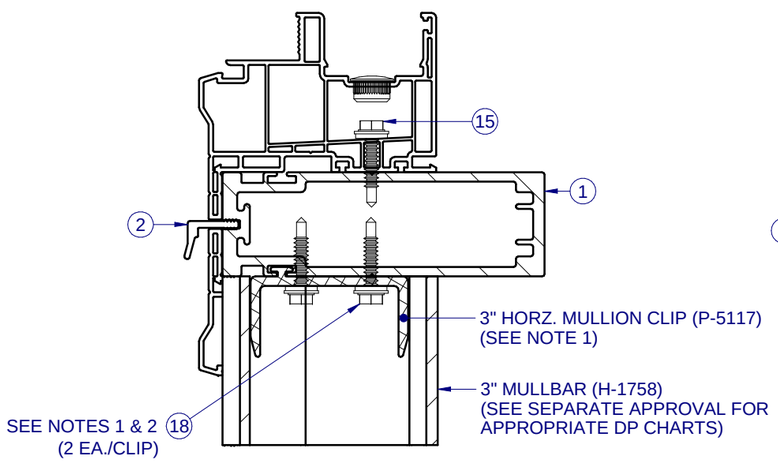

C/7 4" HORIZ. TO 3" VERT. MULLBAR SECTION
FLANGE FRAME WINDOW

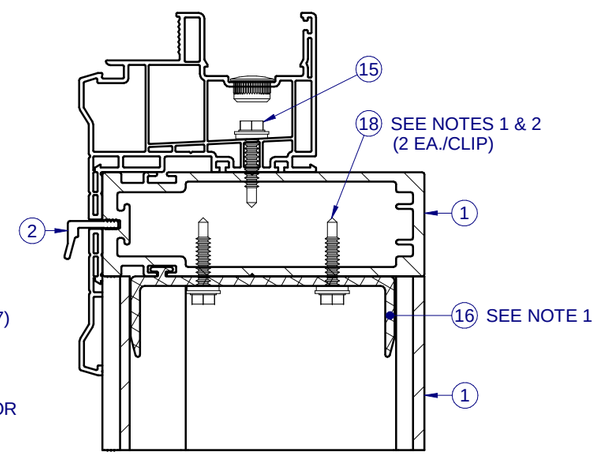

C/7 4" HORIZ. TO 4" VERT. MULLBAR SECTION
FLANGE FRAME WINDOW

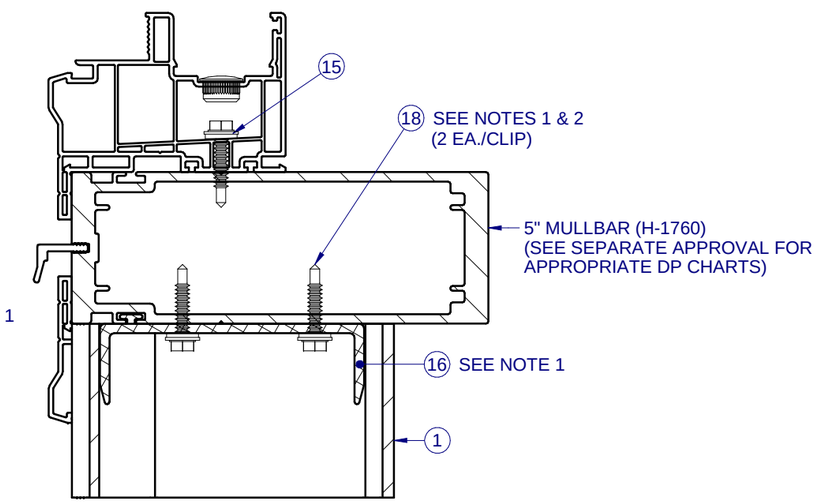

C/7 5" HORIZ. TO 4" VERT. MULLBAR SECTION
FLANGE FRAME WINDOW

NOTES:

1. SLIDE CLIP INTO LOCATION AND SECURE WITH ITEM 18 (QTY 2), AS SHOWN ABOVE.
2. PRE-DRILLED HOLES (THRU H/V CLIPS 5117 OR 5118), BY THE INSTALLER, MAY BE LOCATED AS NEEDED WHILE MAINTAINING A MINIMUM CLIP EDGE DISTANCE OF 9/32" AND A MINIMUM CENTER TO CENTER SPACING OF 1/2".
3. THE ABOVE SECTIONS APPLY TO ALL MULLBAR-TO-MULLBAR CONNECTIONS, REGARDLESS OF ORIENTATION (i.e., HORIZONTAL OR VERTICAL). THE FULL LENGTH MULL MUST BE THE SAME DEPTH, OR GREATER, THAN THE INTERSECTING MULL.
4. REFER TO NOTE 13 ON SHEET 1 FOR ADDITIONAL ANCHOR REQUIREMENTS FOR INSTALLATIONS WITHIN 3,000 FEET OF A SALTWATER COASTLINE

CWS
1900 SW 44TH AVE.
OCALA, FLORIDA 34474
WWW.CWS.CC

VMU04

4" PVC MULL BAR IMPACT

PROPRIETARY AND CONFIDENTIAL
THE INFORMATION CONTAINED IN THIS DRAWING IS THE SOLE PROPERTY OF CUSTOM WINDOW SYSTEMS, INC. ANY REPRODUCTION IN PART OR AS A WHOLE WITHOUT THE WRITTEN PERMISSION OF CUSTOM WINDOW SYSTEMS, INC IS PROHIBITED.

FLORIDA APPROVAL NO.:
9520

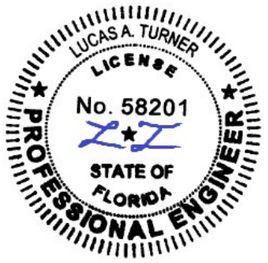

10/7/2026

LUCAS A. TURNER, P.E.
FL PE # 58201
Turner Engineering & Consulting, Inc.
2428 Old Natchez Trc Trl
Camden, TN 38320
PH. 941-380-1574

SHEET DESCRIPTION:
SECTION VIEWS
MULL INTERSECTIONS

DRAWN BY:	DATE:
MCS	9/18/2026
DWG #: CWS-1208	REV.: A
SCALE: 1:2	SHEET 7 OF 10

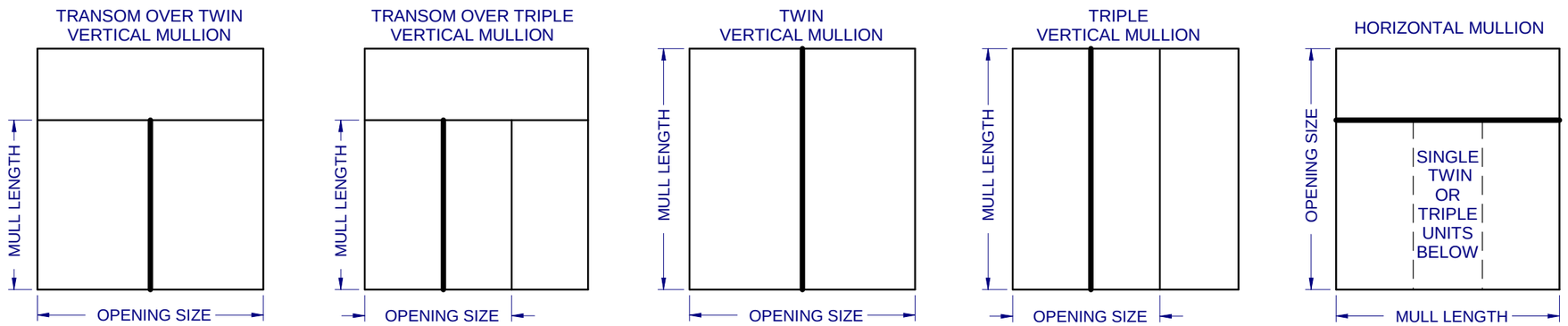

NOTES:

1. AT MULLION LOCATION, ATTACH WINDOW UNIT(S) TO MULLBAR THRU FRAME AS SPECIFIED IN WINDOW UNIT APPROVAL DOCUMENTS. IF ALUMINUM ATTACHMENT IS NOT SPECIFIED IN THE WINDOW UNIT APPROVAL DOCUMENTS, FOLLOW THE ANCHOR SPACING AS INDICATED IN THE WINDOW APPROVAL FOR ATTACHMENT TO WOOD SUBSTRATE, USING A HEX WASHER HEAD TEK SCREW OF THE SAME SIZE (#10 OR #12) AS THE WOOD SCREW INDICATED IN THE WINDOW APPROVAL. TEK SCREWS SHALL BE LONG ENOUGH TO ENSURE THREE (3) THREADS OF PENETRATION BEYOND THE INSIDE WALL OF MULLBAR.

2. MULL CLIP INSTALLATION ANCHOR TYPE, SIZE, SPACING AND EMBEDMENT SHALL BE AS SPECIFIED IN THESE DRAWINGS, SEE TABLE 1, SHEET 9.

3. ALL MULL CLIP INSTALLATION ANCHORS MUST BE MADE OF OR PROTECTED WITH A CORROSION RESISTANT MATERIAL OR COATING. DISSIMILAR METALS OR MATERIALS IN CONTACT WITH PRESSURE TREATED WOOD MUST BE PROTECTED TO PREVENT REACTION.

4. INSTALLATION ANCHORS SHALL BE IN ACCORDANCE WITH ANCHOR MANUFACTURER'S INSTALLATION INSTRUCTIONS, AND ANCHORS SHALL NOT BE USED IN SUBSTRATES WITH STRENGTHS LESS THAN THE MINIMUM SPECIFIED IN TABLE 1, SHEET 9.

5. ANCHOR EMBEDMENT TO SUBSTRATE SHALL BE BEYOND WALL DRESSING OR STUCCO. FOR CONCRETE/CMU OPENINGS, EMBEDMENT SHALL BE BEYOND WOOD BUCKS, IF USED, INTO SUBSTRATE - 1X BUCKS ARE OPTIONAL.

6. A MINIMUM CENTER-TO-CENTER SPACING SHALL BE MAINTAINED AS INDICATED BY THE PRE-DRILLED HOLES AS SHOWN IN THE CLIP LAYOUTS ON SHEETS 4-5.

7. WOOD OR MASONRY OPENINGS, BUCKS AND BUCK FASTENERS SHALL BE PROPERLY DESIGNED BY THE ARCHITECT OR ENGINEER OF RECORD AND INSTALLED TO TRANSFER WIND LOADS TO THE STRUCTURE. SUBSTRATES SHALL MEET THE MINIMUM STRENGTH REQUIREMENTS AS SHOWN IN TABLE1, SHEET 9. CONCRETE AND MASONRY SUBSTRATES MAY NOT BE CRACKED.

8. SEALING AND FLASHING STRATEGIES FOR OVERALL WATER RESISTANCE OF INSTALLATION SHALL BE DONE BY OTHERS FOLLOWING THE CURRENT VERSION OF THE REFERENCE DOCUMENTS: FMA/AAMA 100(FIN WINDOWS), FMA/AAMA 200(FLANGE WINDOWS), FMA/WDMA 250(BOX WINDOWS), FMA/AAMA/WDMA 300(EXTERIOR DOORS)

CWS
1900 SW 44TH AVE.
OCALA, FLORIDA 34474
WWW.CWS.CC

VMU04

4" PVC MULL BAR IMPACT

PROPRIETARY AND CONFIDENTIAL
THE INFORMATION CONTAINED IN THIS DRAWING IS THE SOLE PROPERTY OF CUSTOM WINDOW SYSTEMS, INC. ANY REPRODUCTION IN PART OR AS A WHOLE WITHOUT THE WRITTEN PERMISSION OF CUSTOM WINDOW SYSTEMS, INC IS PROHIBITED.

FLORIDA APPROVAL NO.:
9520

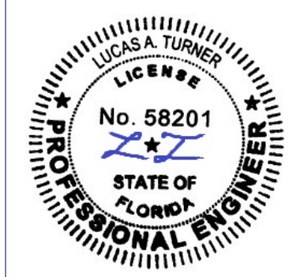

10/7/2026

LUCAS A. TURNER, P.E.
FL PE # 58201
Turner Engineering & Consulting, Inc.
2428 Old Natchez Trc Trl
Camden, TN 38320
PH. 941-380-1574

SHEET DESCRIPTION:
CONFIGURATIONS AND ANCHORAGE NOTES

DRAWN BY:	DATE:
MCS	9/18/2026
DWG #: CWS-1208	REV.: A
SCALE: 1:1	SHEET 8 OF 10

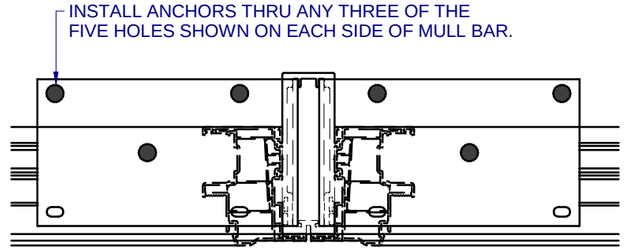

TOP VIEW

MULL CLIP 1767-002 ANCHOR REQUIREMENT

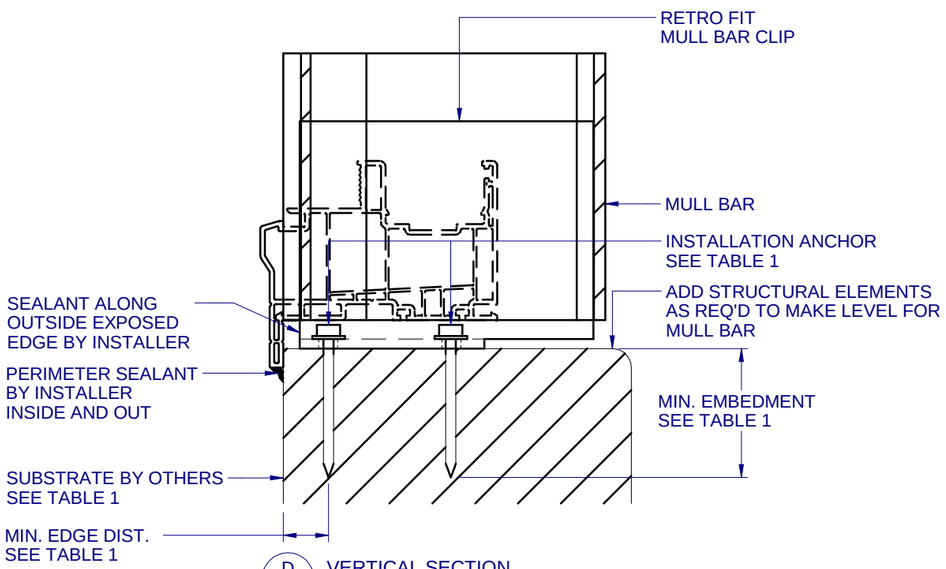

D/9 VERTICAL SECTION
TYPICAL FLANGE (RETRO FIT) ANCHORAGE
HEAD AND JAMBS SIMILAR FOR FLANGE INSTALLATION

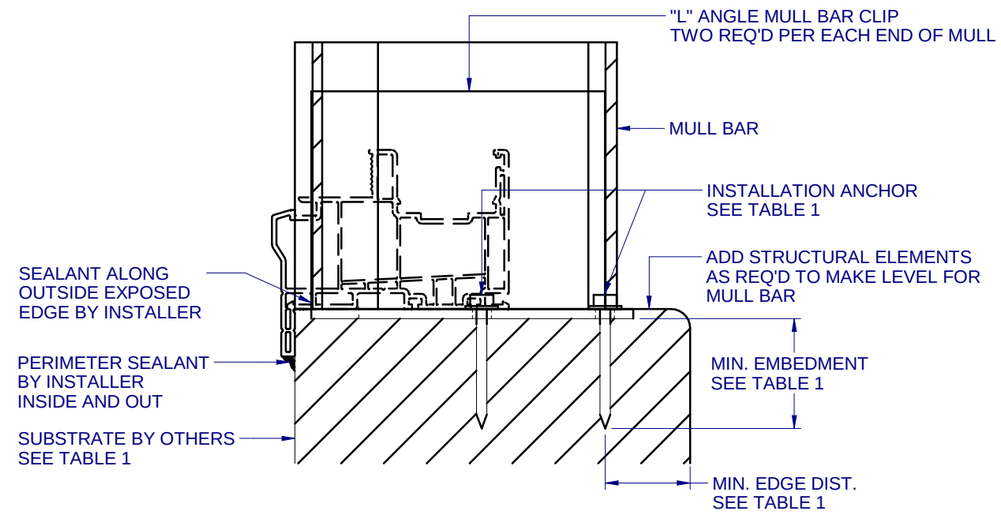

E/9 VERTICAL SECTION
TYPICAL FLANGE (RETRO FIT) ANCHORAGE
HEAD AND JAMBS SIMILAR FOR FLANGE INSTALLATION

TABLE 1: APPROVED MULL CLIP INSTALLATION FASTENERS

SUBSTRATE TYPE	ANCHOR TYPE	MIN. EMBEDMENT	MIN. EDGE DIST.
CONCRETE (2.0 KSI MIN.)	3/16" ITW TAPCON	1"	3"
CONCRETE (3.05 KSI MIN.)	3/16" DEWALT ULTRACON+	1-3/4"	1"
HOLLOW or GROUT-FILLED CMU (ASTM C-90)	1/4" DEWALT ULTRACON+	1-1/4"	2-1/2"
2X MIN. SOUTHERN PINE (G=0.55)	3/16" ITW TAPCON OR DEWALT ULTRACON+	1-3/8"	7/8"
2X MIN. SOUTHERN PINE (G=0.55)	#10 WOOD SCREW	1-3/8"	7/8"
16 GAUGE (0.060") MIN. STEEL STUD (33 KSI YIELD MIN)	#10-16 HILTI KWIK-FLEX OR ITW TEKS SELF-DRILLING SCREW	FULL THREAD THRU 0.060"	7/16"
1/8" ALUM. (6063-T5 MIN.) OR 1/8" STEEL (33 KSI MIN.)	#10 GRADE 5 SELF-TAPPING / DRILLING SCREW	FULL THREAD THRU 0.125"	7/16"

NOTES:

1. BOX FRAME MULL INSTALLATION SIMILAR TO FLANGE FRAME.
2. SILL STOOL MUST BE FLUSH AGAINST INSIDE OF MULLED WINDOWS AFTER INSTALLATION.
3. RECESS RETRO MULLION CLIP 3/8" MAX. FOR CLEARANCE OF WINDOW UNIT AS NEEDED.
4. FOUR (4) ANCHORS REQUIRED PER "T" MULL CLIP, SEE SHEET 2. TWO (2) or THREE (3) ANCHORS REQUIRED PER "L" MULL CLIP, SEE SHEETS 2-3.
5. SEAT MULLION TIGHT TO MULL CLIP.
6. FOR ANCHORAGE DETAILS FOR THE WINDOW, REFER TO THE WINDOW SPECIFIC INSTALLATION DETAILS.
7. REFER TO NOTE 13 ON SHEET 1 FOR ADDITIONAL ANCHOR REQUIREMENTS FOR INSTALLATIONS WITHIN 3,000 FEET OF A SALTWATER COASTLINE

CWS
1900 SW 44TH AVE.
OCALA, FLORIDA 34474
WWW.CWS.CC

VMU04

4" PVC MULL BAR IMPACT

PROPRIETARY AND CONFIDENTIAL
THE INFORMATION CONTAINED IN THIS DRAWING IS THE SOLE PROPERTY OF CUSTOM WINDOW SYSTEMS, INC. ANY REPRODUCTION IN PART OR AS A WHOLE WITHOUT THE WRITTEN PERMISSION OF CUSTOM WINDOW SYSTEMS, INC IS PROHIBITED.

FLORIDA APPROVAL NO.:
9520

10/7/2026

LUCAS A. TURNER, P.E.
FL PE # 58201
Turner Engineering & Consulting, Inc.
2428 Old Natchez Trc Trl
Camden, TN 38320
PH. 941-380-1574

SHEET DESCRIPTION:
INSTALLATION DETAILS FLANGE

DRAWN BY:	DATE:
MCS	9/18/2026
DWG #: CWS-1208	REV.: A
SCALE: 1:2	SHEET 9 OF 10

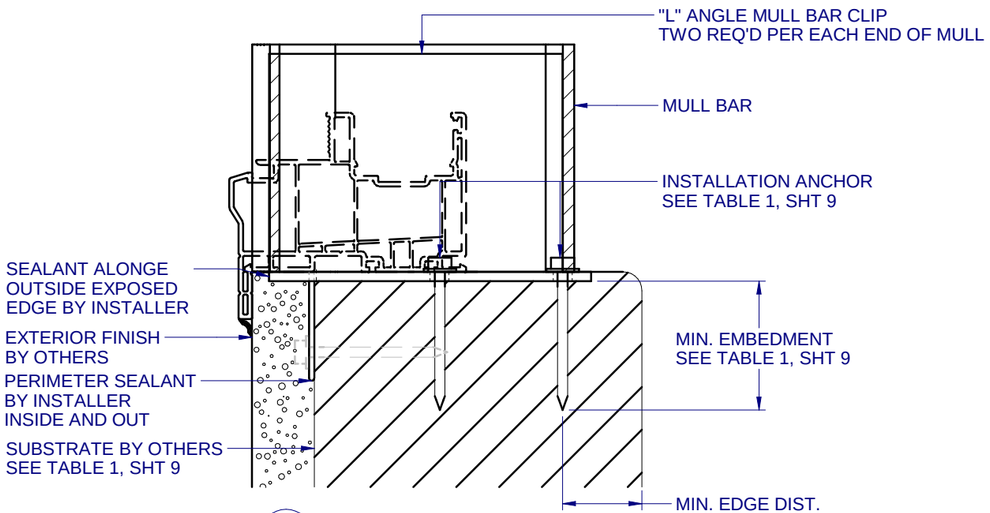

F / 10 VERTICAL SECTION
TYPICAL FIN ("L" ANGLE) ANCHORAGE
HEAD AND JAMBS SIMILAR FOR FIN INSTALLATION

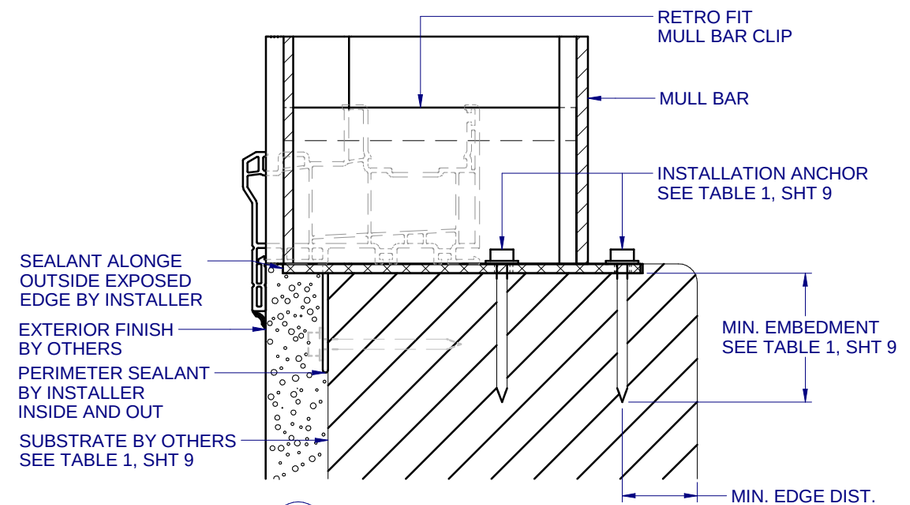

G / 10 VERTICAL SECTION
TYPICAL FIN (RETRO FIT) ANCHORAGE
HEAD AND JAMBS SIMILAR FOR FIN INSTALLATION

NOTES:

1. SILL STOOL MUST BE FLUSH AGAINST INSIDE OF MULLED WINDOWS AFTER INSTALLATION.
2. RECESS RETRO MULLION CLIP 3/8" MAX. FOR CLEARANCE OF WINDOW UNIT AS NEEDED.
3. FOUR (4) ANCHORS REQUIRED PER "T" MULL CLIP, SEE SHEET 2.
   TWO (2) or THREE (3) ANCHORS REQUIRED PER "L" MULL CLIP, SEE SHEETS 2-3.
4. SEAT MULLION TIGHT TO MULL CLIP.
5. FOR ANCHORAGE DETAILS FOR THE WINDOW, REFER TO THE WINDOW SPECIFIC INSTALLATION DETAILS.
6. REFER TO NOTE 13 ON SHEET 1 FOR ADDITIONAL ANCHOR REQUIREMENTS FOR INSTALLATIONS WITHIN 3,000 FEET OF A SALTWATER COASTLINE

CWS
1900 SW 44TH AVE.
OCALA, FLORIDA 34474
WWW.CWS.CC

VMU04

4" PVC MULL BAR IMPACT

PROPRIETARY AND CONFIDENTIAL
THE INFORMATION CONTAINED IN THIS DRAWING IS THE SOLE PROPERTY OF CUSTOM WINDOW SYSTEMS, INC. ANY REPRODUCTION IN PART OR AS A WHOLE WITHOUT THE WRITTEN PERMISSION OF CUSTOM WINDOW SYSTEMS, INC IS PROHIBITED.

FLORIDA APPROVAL NO.:
9520

10/7/2026

LUCAS A. TURNER, P.E.
FL PE # 58201
Turner Engineering & Consulting, Inc.
2428 Old Natchez Trc Trl
Camden, TN 38320
PH. 941-380-1574

SHEET DESCRIPTION:
INSTALLATION DETAILS FIN

DRAWN BY:	DATE:
MCS	9/18/2026
DWG #: CWS-1208	REV.: A
SCALE: 1:2	SHEET 10 OF 10