Evaluation Report

"A.R.B.S. Perimeter Edge Blocking"

Metal Component Assembly

Manufacturer:

A.R.B.S. Alternative Blocking
281 NE 32nd Street
Fort Lauderdale, FL 33334
(954) 563-0235

for

Florida Product Approval

FL 9100.2 R6

Florida Building Code 8th Edition (2023)
Per Rule 61G20-3

Method:	**1 - D**
Category:	**Roofing**
Sub - Category:	**Roofing Accessories that are an Integral Part of the Roofing System**

Product:	*A.R.B.S. Perimeter Edge Blocking*
Material:	*Steel*
Support:	*Steel and Structural Concrete*

This item has been digitally signed and sealed by James L. Buckner, P.E., on this date below. Printed copies of this document are not considered signed and sealed, and the signature must be verified on any electronic copies.

Prepared by:
James L. Buckner, P.E., SECB
Florida Professional Engineer # 31242
Florida Evaluation ANE ID: 1916
Project Manager: Diana Galloway
Report No. 24-665-EdgeBlocking-S16S,C-ER
(Revises 20-279-EdgeBlocking-S16S,C-ER, FL9100.2 R5)
Date: 4/10/2024

JAMES L. BUCKNER
LICENSE
No 31242
STATE OF FLORIDA
PROFESSIONAL ENGINEER

James L. Buckner, P.E.
FL31242

2024.04.10
17:18:22 -04'00'

Contents:

Evaluation Report Pages 1 – 6

Manufacturer: **A.R.B.S. Alternative Blocking**

Product Name: **A.R.B.S. Perimeter Edge Blocking**

Product Category: Roofing

Product Sub-Category Roofing Accessories that are an Integral part of the Roofing System

Compliance Method: State Product Approval Rule 61G20-3.005 (1) (d)

Product Description: Steel edge blocking system mechanically attached to steel and concrete supports.

Product Assembly as Evaluated: Refer to Page 4 of this report for product assembly components/material & standards:
- Perimeter Edge Blocking
- Fasteners

Support:

1) Horizontal Support:

Description:

Material:	Steel
Thickness:	22 Ga. Minimum
Yield Strength:	40 ksi Minimum

2) Vertical Support:

Description:

Material:	Structural Concrete
Compressive Strength:	3,000 psi. Minimum

(Design of supports and their attachments to support framing is outside the scope of this evaluation.)

Performance: **Wind Resistance**

- Design Pressure (ASD)*: **- 424 PSF**

** Allowable design pressure for allowable stress design (ASD).*

Performance Standards:

The product described herein has demonstrated compliance with:

- **TAS 111 (B) –** *Test Procedure For Edge Metal Pull-Off Performance*

Code Compliance:

The product described herein has demonstrated compliance with:
Florida Building Code 8th Edition (2023), Section 1504.5.

Evaluation Report Scope:

This product evaluation is limited to compliance with the structural requirements of the Florida Building Code, as related to the scope section to Florida Product Approval Rule 61G20-3.001.

Limitations and Conditions of Use:

- This evaluation report for "Optional Statewide Approval" contains technical documentation, specifications and installation method(s) which include "Limitations and Conditions of Use" throughout the report in accordance with Rule 61G20-3.005. Per Rule 61G20-3.004, the Florida Building Commission is the authority to approve products under "Optional Statewide Approval".
- Option for application outside "Limitations and Conditions of Use"
  Rule 61G20-3.005(1)(e) allows engineering analysis for "project specific approval by the local authorities having jurisdiction in accordance with the alternate methods and materials authorized in the Code". Any modification of the product as evaluated in this report and approved by the Florida Building Commission is outside the scope of this evaluation and will be the responsibility of others.
- This report is a building code product evaluation per FLPE rule (FAC) 61G15-36 to comply with Florida product approval rule (FAC) 61G20-3. This evaluation report is part of the Florida Building Commission approval for the listed code related criteria. This report by James Buckner, P.E. and CBUCK Engineering is not a design certification of code compliance construction submittal documentation, per FBC section 107, for any individual structure, site specific or permit design.
- Supports shall be in compliance with applicable building code. Design of support system is outside the scope of this report.
- All metal components and fasteners shall be corrosion resistant in accordance with applicable sections of FBC, including but limited to Sections 1504.3.2, 1506.5, 1506.6 and 1507.4.4.
- Fire Classification is outside the scope of Rule 61G20-3 and is therefore not included in this evaluation.
- This evaluation report does not evaluate the use of this product for use in the High Velocity Hurricane Zone code section. (Dade & Broward Counties)

Quality Assurance:

The manufacturer has demonstrated compliance of roof panel products in accordance with the Florida Building Code and Rule 61G20-3.005 (3) for manufacturing under a quality assurance program audited by an approved quality assurance entity through **Keystone Certifications, Inc. – QA.** (FBC Organization #: QUA 1824).

Components/Materials (As Evaluated):

Perimeter Edge Blocking:

Material:	Steel
Thickness:	16 Ga. Minimum
Yield Strength:	33 ksi Minimum
Corrosion Resistance:	In compliance with FBC Section 1507.4.3(1) and Table 1507.4.3(2)
Dimension:	
Maximum Length:	40’
Horizontal Leg:	4-1/2”
Top Flange:	2-1/2”
Vertical Face:	10”

Horizontal Steel Support Fasteners
(Florida or Miami-Dade Approved Roof Fasteners):

Type:	Low Profile, Self-Drilling Screws
Size:	#14 × 1-1/2” Minimum
Corrosion Resistance:	Per FBC Section 1506.6 and 1507.4.4

Vertical Concrete Support Fasteners
(Florida or Miami-Dade Approved Roof Fasteners):

Type:	Low Profile Screws
Size:	#1/4 × 2” Minimum
Corrosion Resistance:	Per FBC Section 1506.6 and 1507.4.4

Installation:

Install the **“A.R.B.S Perimeter Edge Blocking”** anchor as follows:

- Attach horizontal leg to horizontal steel support with above described **Fasteners** spaced **9” o.c.** maximum along the length of the horizontal leg and 1” from all ends**.** Fasteners shall penetrate through horizontal steel support a minimum of 1/2”.
- Attach vertical face to structural concrete support with above described **Fasteners** spaced **9” o.c.** maximum along the length of the vertical face and nominally 1” below the horizontal leg. Fasteners shall be embedded into vertical concrete support a minimum of 1-3/4”.

Install the “A.R.B.S. Perimeter Edge Blocking” assembly in compliance with the installation method listed in this report and applicable code sections of FBC. The installation method described herein is in accordance with the scope of this evaluation report. Refer to manufacturer’s installation instructions as a supplemental guide for attachment.

Referenced Data:

1. TAS 111 (B) – 95 Pull-Off Performance Test
   By Hurricane Test Laboratory, LLC. (TST ID: 3892)
   Report #: 0397-0327-05, Conclusion Section 7.1; Test Date: 2 / 21 / 07
2. Quality Assurance
   By Keystone Certifications, Inc. (FBC Organization #QUA ID: 1824)
   A.R.B.S. Inc. Licensee # 297
3. Certification of Independence
   By James L. Buckner, P.E. @ CBUCK Engineering (FBC Organization # ANE 1916)
4. Rational Engineering
   By CBUCK Engineering
   Report #C04-173-EB

Installation Method

A.R.B.S. Alternative Blocking

"A.R.B.S. Perimeter Edge Blocking" (16 ga Min) Attached to Steel & Concrete Supports

Profile Drawings

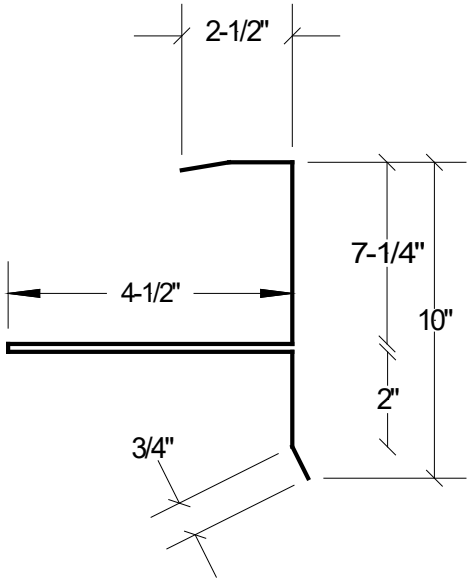

Product Profile View

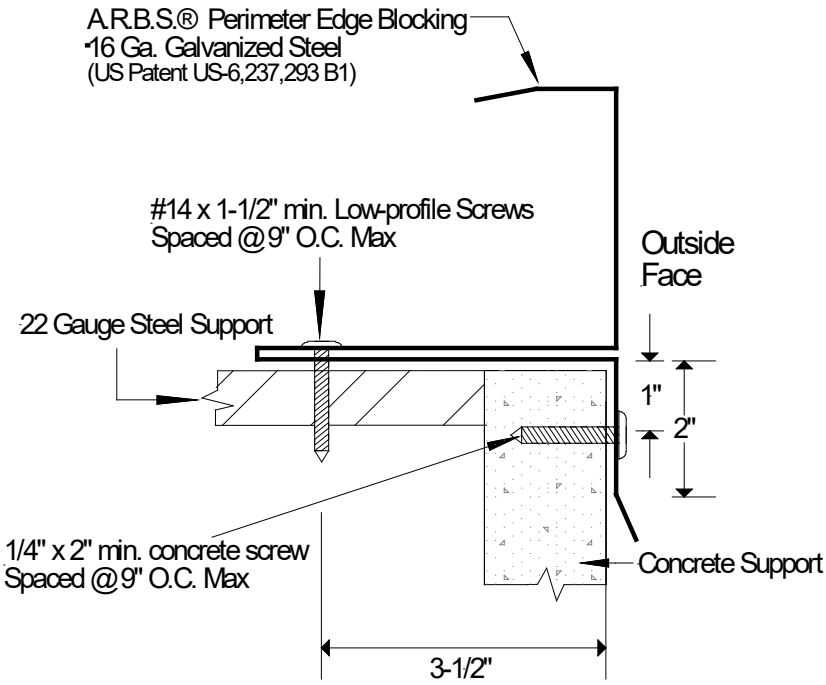

Typical Assembly Profile View