## ARMOR SCREEN INSTALLATION INSTRUCTIONS:

Armor Screen is a flexible wind abatement and impact protection system utilizing a woven monofilament geotextile that fulfills the 2023 Florida Building Code 8th edition (2023) requirement for opening protection. This system is for use outside the high hurricane zone(HVHZ- Miami-Dade & Broward Counties). For information on use of this system within the HVHZ, refer to Armor Screen's Miami-Dade Notice of Acceptance (NOA) available on the Miami-Dade Product Control website. Separation from glass is required when system is installed within wind zone 4, within the HVHZ and on essential facilities.

Geosynthetic hurricane screen: The hurricane screen shall be produced from a polypropylene, woven monofilament geotextile fabric with individual filaments woven into a basket weave network and calendered such that the filaments retain dimensional stability relative to each other. The woven monofilament geotextile fabric shall have the following minimum average roll values:

| | | |
|---|---|---|
| Grab Tensile Strength | (ASTM D4632) | 425 x 325 LBS |
| Puncture Strength | (ASTM D4833) | 130 LBS |
| Mullen Burst | (ASTM D3786) | 675 PSI |
| Trapezoidal Tear | (ASTM D4533) | 150 x 125 LBS |
| Wide Width Tensile Strength | (ASTM D4595) | 225 x 205 LBS/IN |
| Wide Width Elongation | (ASTM D4595) | 22 x 21% |
| Apparent Opening Size | | 30 US STD SIEVE. |
| Percentage of Open Area | | 5% |

The pores in Armor Screen are small enough that the surface tension of water causes the barrier screen to become solid in the presence of rain, and prevents damaging voluminous water intrusion, even from torrential rains.

In dry conditions, the pores remain open, and based on testing, allow approximately 3% of the wind to pass through.

Barrier can be mounted with opposing primary anchored perimeters in vertical, horizontal or any alignment appropriate to the structure being protected.

Design loads calculated to ASCE 7-22 as required by the prevailing building code.

Product marking - a label shall be affixed to the barrier with the following statement: "Armor Screen Corporation, Florida Building Code Approved"

Testing meets Florida Building Code 8th Edition; TAS 201; TAS 202; TAS 203; ASTM E 330-02; ASTM E 1996-17 Level D; and ASTM E 1886-12 per Sections 1620 and 1626 and fulfills its requirement for opening protection.

- ASTM G155
- ASTM D638
- ASTM C158
- ASTM D635 - C1
- ASTM D1929
- ASTM D2843

ALL GEOSYNTHETIC HURRICANE SCREEN ASSEMBLY INSTALLATION DETAILS DEPICTED WITHIN THESE DRAWINGS ARE TYPICAL FOR THE INSTALLATION OF THIS WIND ABATEMENT AND IMPACT PROTECTION SYSTEM ONLY. ALL OTHER BUILDING COMPONENTS SHOWN HEREIN ARE DEPICTED AS EXISTING, AND NOT CONSTRUCTED BY THE SCREEN COMPANY.

### EXAMPLES OF TYPICAL INSTALLATIONS

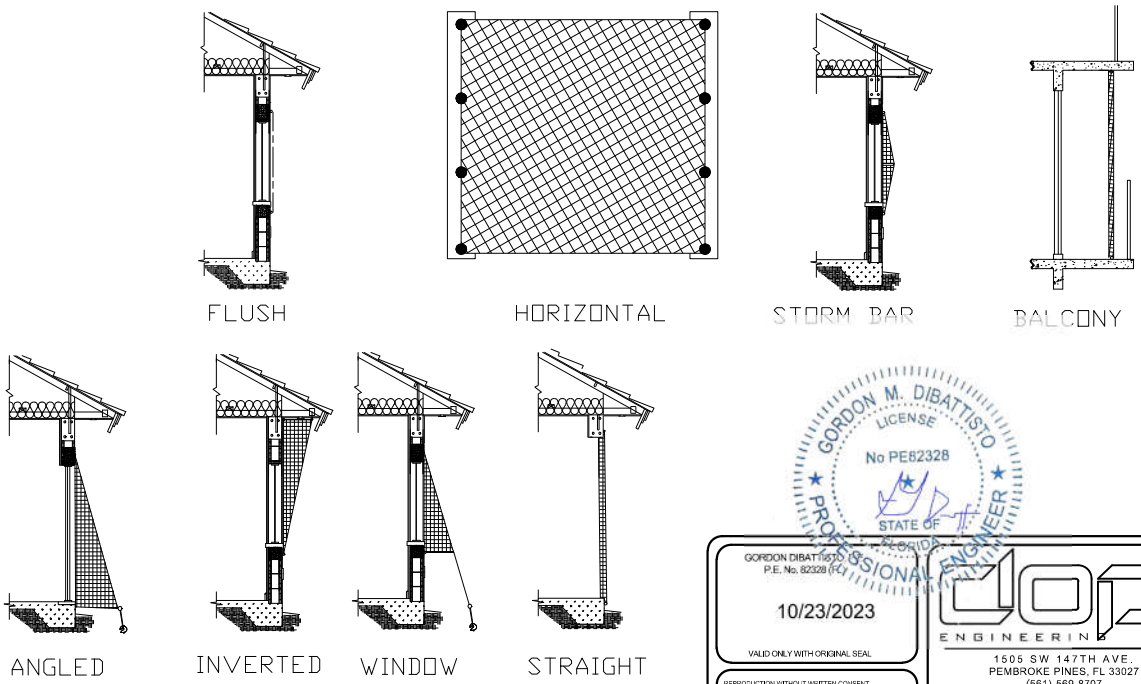


GORDON M. DIBATTISTO LICENSE No PE82328 STATE OF FLORIDA PROFESSIONAL ENGINEER

GORDON DIBATTISTO
P.E. No. 82328 (FL)
10/23/2023
VALID ONLY WITH ORIGINAL SEAL

REPRODUCTION WITHOUT WRITTEN CONSENT. ALTERATIONS, ADDITIONS, OR OTHER MARKINGS TO THIS DOCUMENT ARE NOT PERMITTED AND INVALIDATE OUR CERTIFICATION.

DOP ENGINEERING
1505 SW 147TH AVE.
PEMBROKE PINES, FL 33027
(561)-569-8707
OFFICE@DOPENGINEERING.COM
REGISTRY No. 34110

2005 © ARMOR SCREEN CORPORATION

Armor Screen Corp.
2744 Hillsboro Road
West Palm Beach, FL
ArmorScreen.com
(561) 841-8890

TITLE:

ARMOR SCREEN SERIES 2000 FLEXIBLE WIND ABATEMENT/IMPACT PROTECTION SYSTEM

FL #

FL 812 - R10

DATE: 04/23/2015

REVISION DATE: 10/23/2023

SCALE: N.T.S.

Table 1

| Span | Deflection | Anchor Spacing 1' O/C | Anchor Spacing 2' O/C | Anchor Choices * 1* | 2* | 3* | 4* |
|---|---|---|---|---|---|---|---|
| in feet | in inches | Design pressure ** | | ⅜" open eye | ⅜" bolt | ½" open eye | ½" bolt |
| 4' | 5.5" | 130 | 65 | X | X | X | X |
| 6' | 6.7" | 130 | 65 | | X | X | X |
| 6' | 6.7" | 92.75 | 46 | X | X | X | X |
| 8' | 8.5" | 130 | 90 | | | | X |
| 8' | 8.5" | 130 | 65 | | | X | X |
| 8' | 8.5" | 115 | 58 | | X | X | X |
| 8' | 8.5" | 68.75 | 34 | X | X | X | X |
| 10' | 16" | 130 | 90 | | | | X |
| 10' | 16" | 130 | 65 | | X | X | X |
| 10' | 16" | 94.75 | 47 | X | X | X | X |
| 12' | 21" | 130 | 90 | | | | X |
| 12' | 21" | 130 | 65 | | | X | X |
| 12' | 21" | 120 | 60 | | X | X | X |
| 12' | 21" | 69.75 | 35 | X | X | X | X |
| 14' | 30" | 130 | 80 | | | | X |
| 14' | 30" | 130 | 65 | | | X | X |
| 14' | 30" | 120 | 60 | | X | X | X |
| 14' | 30" | 64.75 | 32 | X | X | X | X |
| 16' | 39" | 130 | 75 | | | | X |
| 16' | 39" | 130 | 65 | | | X | X |
| 16' | 39" | 110 | 55 | | X | X | X |
| 16' | 39" | 60 | 34.25 | X | X | X | X |
| 20' | 40" | 58.00 | 29.00 | | | X | X |
| 24' | 41" | 48.00 | 24.00 | | | X | X |

CONCRETE: *Table is intended for drop-in and LDT anchors in concrete.
WOOD: Lag anchoring (incl. LDT) into wood as follows
Column 1*: ⅜" thread, 1.75" penetration into SYP (0.55sg)
Column 2*: ⅜" thread, 3.1" penetration into SYP
Column 3*: ½" thread, 3.0" penetration into SYP
Column 4*: ½" thread, 3.7" penetration into SYP
EARTH: * Specified earth anchor may be used with any of table choices.
HOLLOW BLOCK: Column 1*, approved epoxy anchoring system for ⅜" & ½" thread.
NOTE: **Design pressure may be increased by 5% for negative loads.
TRACK SYSTEM: Table applies to track system, anchored with two 5⁄16" fasteners per cleat, as follows:
- into hollow block, min. 1 ¼" embed can be installed as in column 1*
- into concrete, min. 1 ¾" embed can be installed as in column 3*
- into concrete, min. 2" embed can be installed as in column 4*
- into wood (SYP. sg. 0.55), min. 1" embed can be installed as in column 1*
- into wood (SYP. sg. 0.55), min. 2" embed installed as in column 3*

NOTES:
Anchor Spacing: varies inversely with pressure and is subject to rational analysis, Max 24"/ Min 6" O.C.
Span: is measured anchor to anchor and is subject to rational analysis.
Deflection: is minimum glass separation measured at mid-span of screen and is subject to rational analysis.
ANCHOR SPECIFICATION:
Lag Anchors: ⅜" Lag Anchor
½" Lag Anchor
Tapcon 5⁄16", ⅜", or ½" LDT can anchor in both wood and concrete
Drop-in Anchor: ⅜" Steel Drop-in anchor in 3000 PSI (min.) concrete, 1 ½" min. embedment, 4" min. edge distance (Dewalt or equal)
½" Steel Drop-in anchor in 3000 PSI (min.) concrete, 2" min. embedment, 5" min. edge distance (Dewalt or equal)
Earth Anchor: Proprietary System: Stabilized ½" x 30" Shaft with 4" helix
Working Load of Earth Anchor is 3150 LBS.
Soil Class: 5 (medium dense coarse sand)
Epoxy Anchor: Equal to Red Head umbrella inserts and screens with Dewalt pure 50+ Epoxy.

GORDON M. DIBATTISTO LICENSE No PE82328 STATE OF FLORIDA PROFESSIONAL ENGINEER

GORDON DIBATTISTO, P.E. No. 82328 (FL)
10/23/2023
VALID ONLY WITH ORIGINAL SEAL

REPRODUCTION WITHOUT WRITTEN CONSENT, ALTERATIONS, ADDITIONS, OR OTHER MARKINGS TO THIS DOCUMENT ARE NOT PERMITTED AND INVALIDATE OUR CERTIFICATION.

DOP ENGINEERING
1505 SW 147TH AVE.
PEMBROKE PINES, FL 33027
(561)-569-8707
OFFICE@DOPENGINEERING.COM
REGISTRY No. 34110

2005 © ARMOR SCREEN CORPORATION

Armor Screen Corp.
2744 Hillsboro Road
West Palm Beach, FL
ArmorScreen.com
(561) 841-8890

TITLE:
ARMOR SCREEN SERIES 2000 BUCKLE & STRAP SYSTEM

FL #
FL 812 - R10

DATE: 04/23/2015
REVISION DATE: 10/23/2023

SCALE: N.T.S.

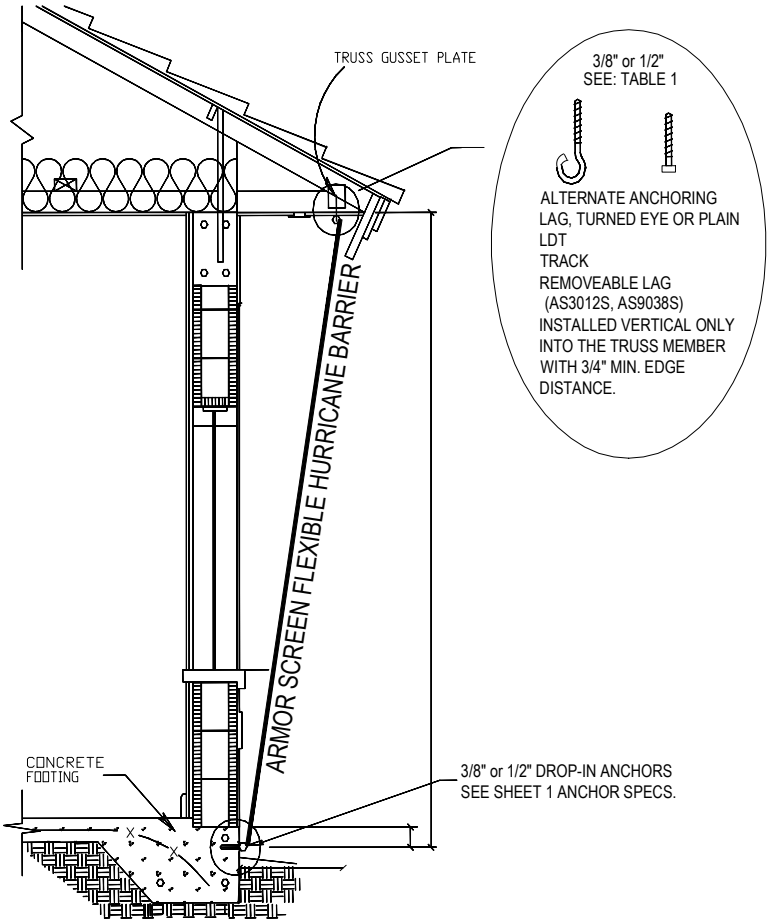


TYPICAL ONE STORY ASSEMBLY INSTALLATION

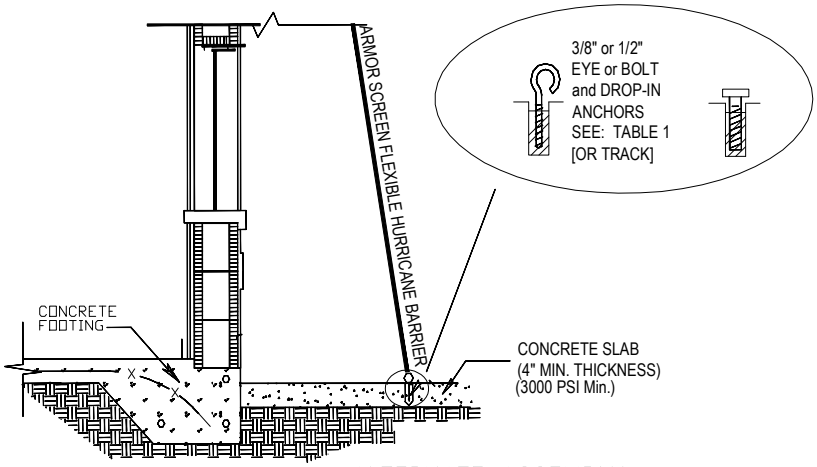


ALTERNATE ASSEMBLY INSTALLATION AT EXTERIOR SLAB

Armor Screen Corp.
2744 Hillsboro Road
West Palm Beach, FL
ArmorScreen.com
(561) 841-8890

TITLE:

ARMOR SCREEN SERIES 2000 BUCKLE & STRAP SYSTEM

FL #

FL 812 - R10

DATE: 04/23/2015

REVISION DATE: 10/23/2023

GORDON M. DIBATTISTO
LICENSE
No PE82328
STATE OF FLORIDA
PROFESSIONAL ENGINEER

GORDON DIBATTISTO, P.E.
P.E. No. 82328 (FL)

10/23/2023

VALID ONLY WITH ORIGINAL SEAL

REPRODUCTION WITHOUT WRITTEN CONSENT, ALTERATIONS, ADDITIONS, OR OTHER MARKINGS TO THIS DOCUMENT ARE NOT PERMITTED AND INVALIDATE OUR CERTIFICATION.

DOP ENGINEERING
1505 SW 147TH AVE.
PEMBROKE PINES, FL 33027
(561)-569-8707
OFFICE@DOPENGINEERING.COM
REGISTRY No. 34110

SCALE: N.T.S.



2005 © ARMOR SCREEN CORPORATION

STORM BAR

| MAX. STORM BAR SPAN | 4' | 5' | 6' | 8' | 9' 9" | 12' | 14' |
|---|---|---|---|---|---|---|---|
| MAX. PSF | 130 | 86 | 60 | 130 | 60 | 130 | 130 |
| SYP 2"x6" | X | X | X | | | | |
| ALUM. TUBE 2"x6"x⅛" 6063-T6 | | | | X | | | |
| SYP 4"x8" | | | | | X | | |
| ALUM. TUBE 2"x6"x¼" 6061-T6 | | | | | | X | |
| ALUM. TUBE 2"x8"x¼" 6061-T6 | | | | | | | X |

- STORM BAR SPAN IS MEASURED BRACKET TO BRACKET.
- DEFLECTION; ACHIEVED BY ONE OR MORE STORM BARS AND MAY BE INCREASED WITH BLOCKING
- MAX. DEFLECTION TO BE PER NOA AS RELATES TO SPAN. SPAN PROPORTIONATELY REDUCED BY INTERMEDIATE RESTS, SUCH AS STORM BARS OR MULLIONS, AND MEASURED FROM ANCHOR TO PROXIMATE STORM BAR OR BETWEEN PROXIMATE STORM BARS
- THE STORM BAR SPLITS THE ANCHOR / SCREEN SPAN INTO MULTIPLE SPANS, EACH OF WHICH IS USED TO DETERMINE THE MINIMUM DEFLECTION.
- ANCHOR ENDS WITH MINIMUM ¼" HARDWARE
- STORM BAR MAY BE ATTACHED WITH PERMANENT OR REMOVABLE STORM BAR BRACKET, OR BY ATTACHING THE STORM BAR DIRECTLY TO THE WALL.
- ALTERNATE: CUSTOM BRACKET COMPRISED OF 2" X 2" X 1 ½" X ⅛" ALUMINUM ANGLES ON EACH SIDE OF STORM BAR.
- SUBJECT TO RATIONAL ANALYSIS

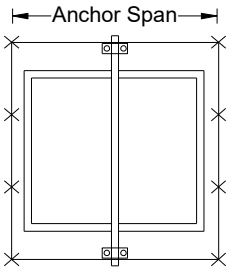


SINGE STORM BAR HORIZONTAL SCREEN ELEVATION

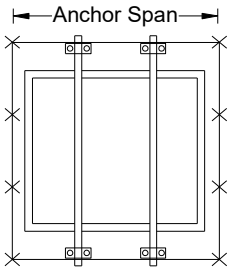


MULTIPLE STORM BAR HORIZONTAL SCREEN ELEVATION

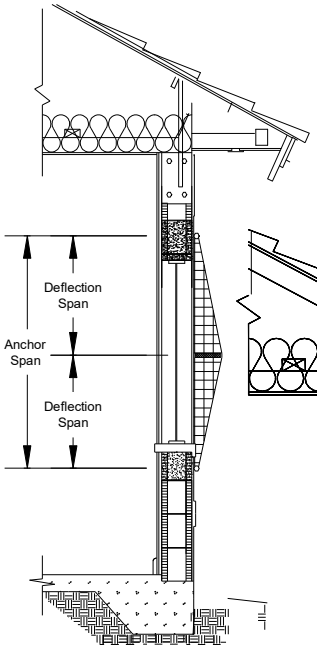


STORM BAR CONFIGURATION

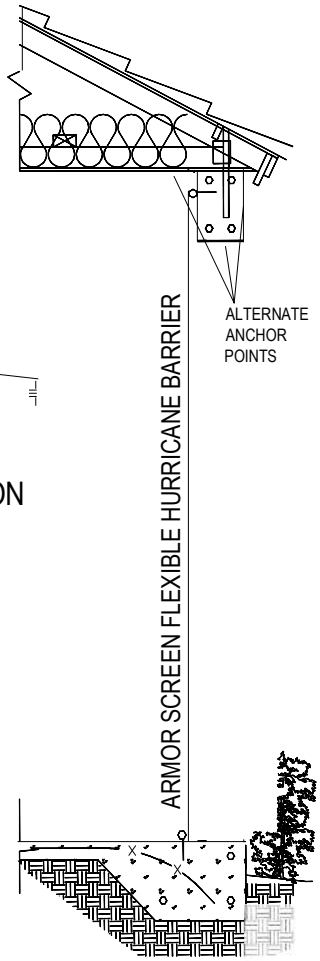


PORCH INSTALLATION

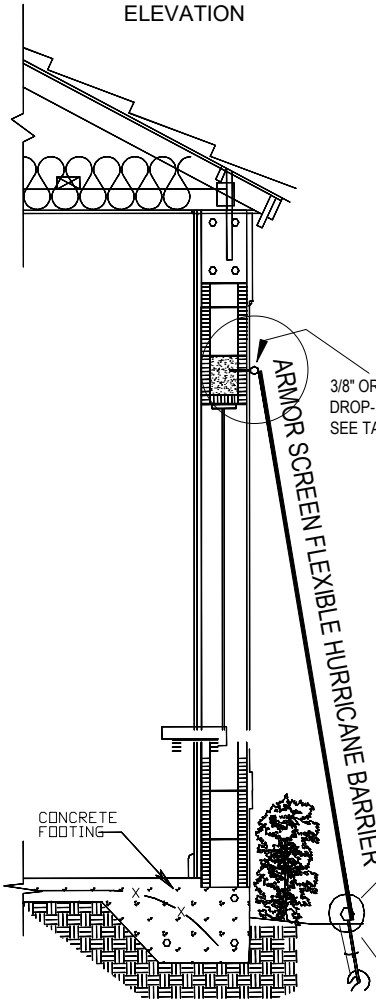


INTO EARTH
ALTERNATE ASSEMBLY INSTALLATION

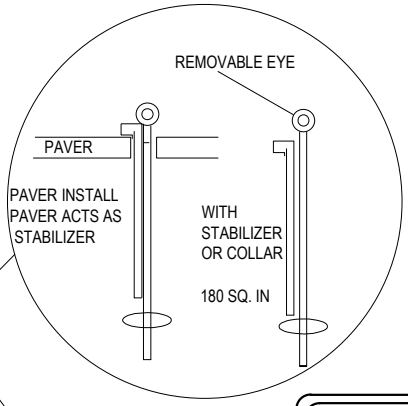


EARTH ANCHOR, 4" DIAM. HELIX HORIZONTALLY STABILIZED 24" O.C. SEE: TABLE 1


Armor Screen Corp.
2744 Hillsboro Road
West Palm Beach, FL
ArmorScreen.com
(561) 841-8890


TITLE:

ARMOR SCREEN SERIES 2000 BUCKLE & STRAP SYSTEM

FL #

FL 812 - R10

DATE: 04/23/2015

REVISION DATE: 10/23/2023


GORDON DIBATTISTO, P.E.
P.E. No. 82328 (FL)


10/23/2023

VALID ONLY WITH ORIGINAL SEAL


REPRODUCTION WITHOUT WRITTEN CONSENT, ALTERATIONS, ADDITIONS, OR OTHER MARKINGS TO THIS DOCUMENT ARE NOT PERMITTED AND INVALIDATE OUR CERTIFICATION.



DOP ENGINEERING
1505 SW 147TH AVE
PEMBROKE PINES, FL 33027
(561)-569-8707
OFFICE@DOPENGINEERING.COM
REGISTRY No. 34110


GORDON M. DIBATTISTO
LICENSE
No PE82328
STATE OF FLORIDA
PROFESSIONAL ENGINEER

SCALE: N.T.S.

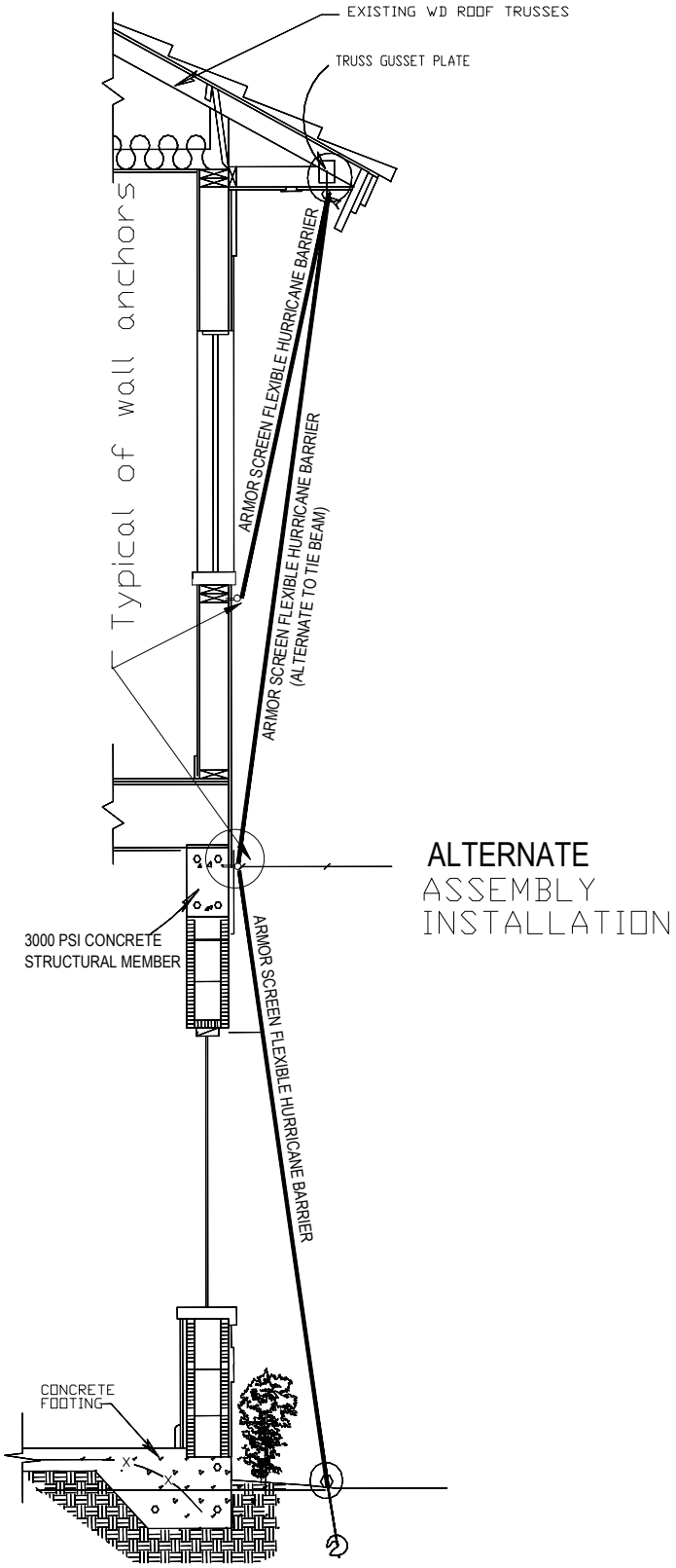


ALTERNATE
ASSEMBLY
INSTALLATION

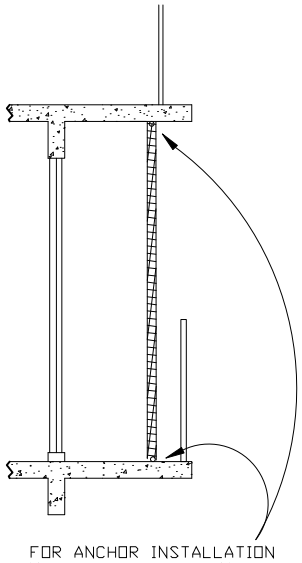

FOR ANCHOR INSTALLATION
MAINTAIN AT LEAST MIN.
EDGE DISTANCE AND FULL
CAPACITY SPACING FROM
HANDRAIL ANCHORS

BALCONY SCREEN

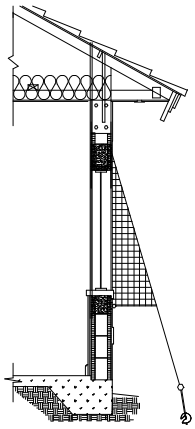

CLOSED ON SIDES AND
BOTTOM
ANCHORED AT LOWER CORNERS

WINDOW SCREEN

GORDON M. DIBATTISTO
LICENSE
No PE62328
STATE OF FLORIDA
PROFESSIONAL ENGINEER
GORDON M. DIBATTISTO P.E.
PE # 62328 (FL)
10/23/2023
VALID ONLY WITH ORIGINAL SEAL

REPRODUCTION WITHOUT WRITTEN CONSENT, ALTERATIONS, ADDITIONS, OR OTHER MARKINGS TO THIS DOCUMENT ARE NOT PERMITTED AND INVALIDATE OUR CERTIFICATION.

DOP ENGINEERING
1505 SW 147TH AVE.
PEMBROKE PINES, FL 33027
(561)-569-8707
OFFICE@DOPENGINEERING.COM
REGISTRY No. 34110

2005 © ARMOR SCREEN CORPORATION

Armor Screen Corp.
2744 Hillsboro Road
West Palm Beach, FL
ArmorScreen.com
(561) 841-8890

TITLE:

ARMOR SCREEN
SERIES 2000
BUCKLE & STRAP
SYSTEM

FL #

FL 812

DATE: 04/23/2015

REVISION DATE: 10/23/2023

SCALE: N.T.S.

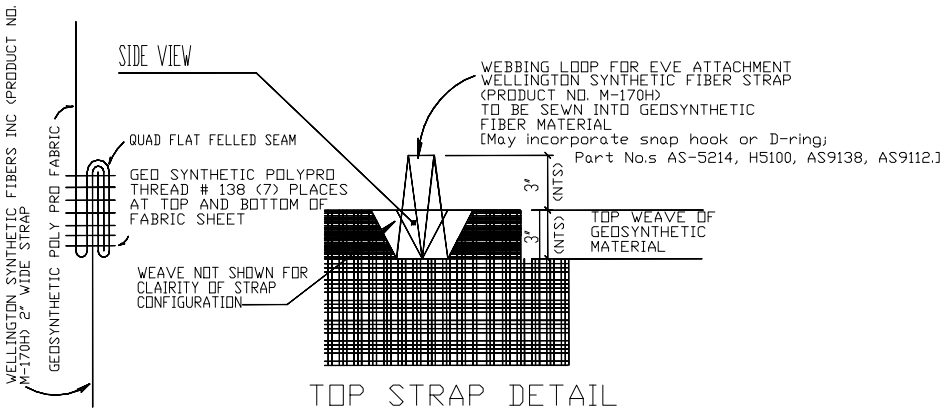


TOP STRAP DETAIL

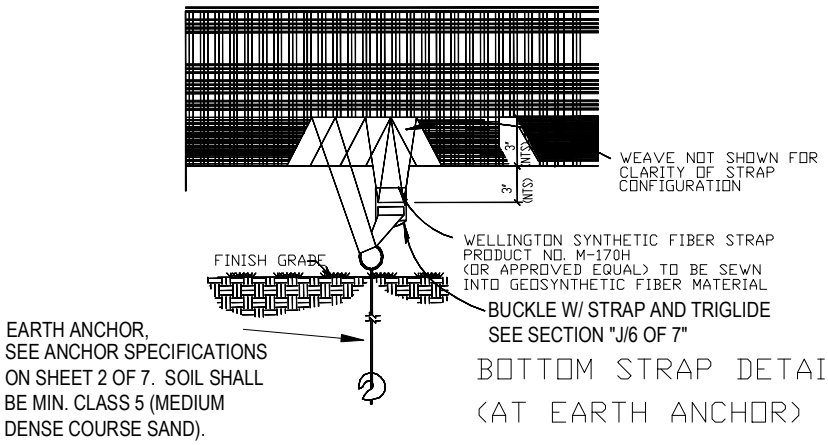


BOTTOM STRAP DETAIL
(AT EARTH ANCHOR)

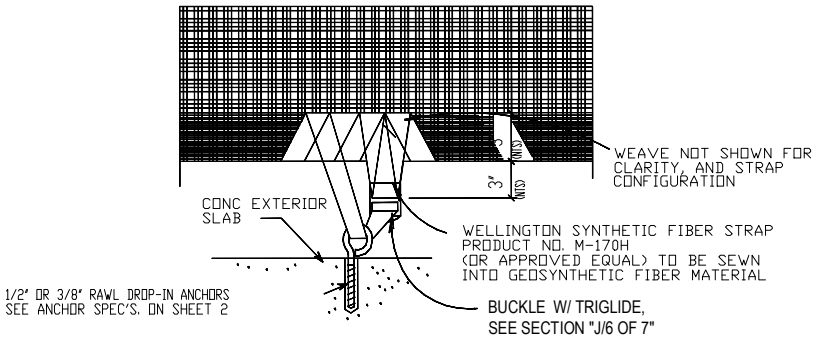


BOTTOM STRAP DETAIL
(AT ANCHORAGE INTO CONCRETE)

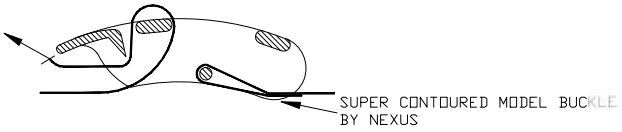


GORDON M. DIBATTISTO
LICENSE
No PE82328
STATE OF FLORIDA
PROFESSIONAL ENGINEER

GORDON DIBATTISTO, P.E.
P.E. No. 82328 (FL)
10/23/2023
VALID ONLY WITH ORIGINAL SEAL

REPRODUCTION WITHOUT WRITTEN CONSENT, ALTERATIONS, ADDITIONS, OR OTHER MARKINGS TO THIS DOCUMENT ARE NOT PERMITTED AND INVALIDATE OUR CERTIFICATION.

DOP ENGINEERING
1505 SW 147TH AVE.
PEMBROKE PINES, FL 33027
(561)-569-8707
OFFICE@DOPENGINEERING.COM
REGISTRY No. 34110

Armor Screen Corp.
2744 Hillsboro Road
West Palm Beach, FL
ArmorScreen.com
(561) 841-8890

TITLE:

ARMOR SCREEN SERIES 2000 BUCKLE & STRAP SYSTEM

FL #

FL 812

DATE: 04/23/2015

REVISION DATE: 10/23/2023

SCALE: N.T.S.

2005 © ARMOR SCREEN CORPORATION

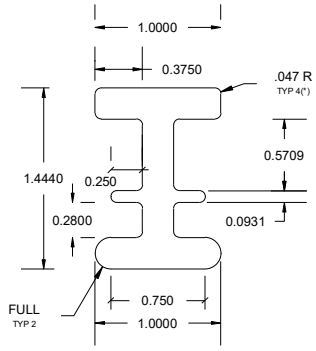


"I" TRACK ALUMINUM
ALLOY 6005-T5

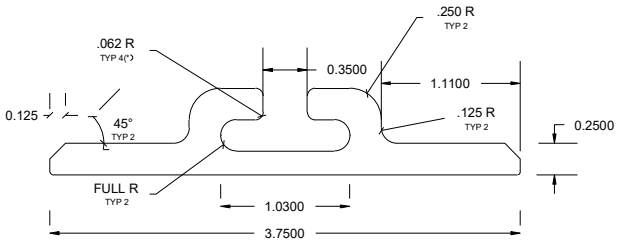


BRACKET (PART # AST-1100)
ALUMINUM ALLOY
6005-T5

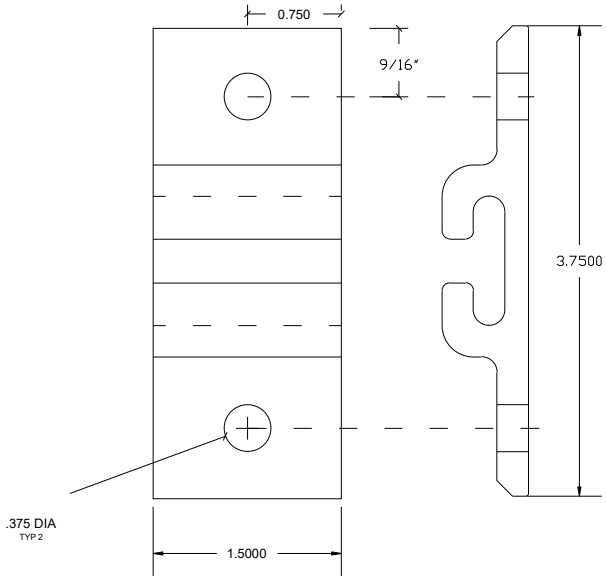


D-RING

SNAKE HOOKS

3/8" KEYHOLE CLIPS
1/2" KEYHOLE CLIPS

5/16" TAPCONS
3/8" TAPCONS
1/2" TAPCONS

3/8" LAG ANCHOR
3/8" CARRIAGE BOLT
3/8" EYEBOLT

1/2" LAG ANCHOR
1/2" CARRIAGE BOLT
1/2" EYEBOLT

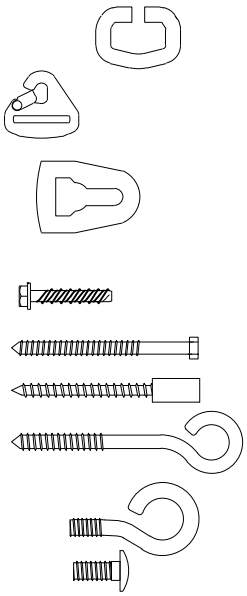

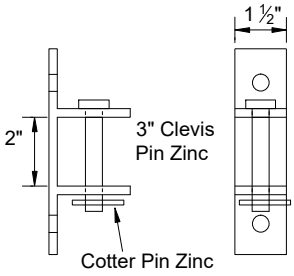


STORM BAR BRACKET
Type 6063-T6

IMAGES ARE REPRESENTATIVE AND NOT TO SCALE

GORDON M. DIBATTISTO
LICENSE
No PE82328
STATE OF
PROFESSIONAL ENGINEER
GORDON M. DIBATTISTO P.E.
P.E. No. 82328
10/23/2023
VALID ONLY WITH ORIGINAL SEAL

REPRODUCTION WITHOUT WRITTEN CONSENT, ALTERATIONS, ADDITIONS, OR OTHER MARKINGS TO THIS DOCUMENT ARE NOT PERMITTED AND INVALIDATE OUR CERTIFICATION.

DOP ENGINEERING
1505 SW 147TH AVE.
PEMBROKE PINES, FL 33027
(561)-569-8707
OFFICE@DOPENGINEERING.COM
REGISTRY No. 34110

Armor Screen Corp.
2744 Hillsboro Road
West Palm Beach, FL
ArmorScreen.com
(561) 841-8890

TITLE:

ARMOR SCREEN SERIES 2000 BUCKLE & STRAP SYSTEM

FL #

FL 812

DATE: 04/23/2015

REVISION DATE: 10/23/2023

SCALE: N.T.S.



2003 © ARMOR SCREEN CORPORATION

| LOADS ON EXISTING STRUCTURE FROM SCREEN SYSTEM<br>Rh= PERPENDICULAR LOADS (PSF) | | | | | | | | | |
|---|---|---|---|---|---|---|---|---|---|
| Span in feet | Span in inches | PRESSURE (PSF) | | | | | | | |
| | | 30 psf | 40 psf | 50 psf | 60 psf | 70 psf | 90 psf | 110 psf | 130 psf |
| 3 ft. | 38 in. | 45 | 60 | 75 | 90 | 105 | 135 | 165 | 195 |
| 4 ft. | 48 in. | 60 | 80 | 100 | 120 | 140 | 180 | 220 | 260 |
| 5 ft. | 60 in. | 75 | 100 | 125 | 150 | 175 | 225 | 275 | 325 |
| 6 ft. | 72 in. | 90 | 120 | 150 | 180 | 210 | 270 | 330 | 390 |
| 7 ft. | 84 in. | 105 | 140 | 175 | 210 | 245 | 315 | 385 | 455 |
| 8 ft. | 96 in. | 120 | 160 | 200 | 240 | 280 | 360 | 440 | 520 |
| 9 ft. | 108 in. | 135 | 180 | 225 | 270 | 315 | 405 | 495 | 585 |
| 10 ft. | 120 in. | 150 | 200 | 250 | 300 | 350 | 450 | 550 | 650 |
| 11 ft. | 132 in. | 165 | 220 | 275 | 330 | 385 | 495 | 605 | 715 |
| 12 ft. | 144 in. | 180 | 240 | 300 | 360 | 420 | 540 | 660 | 780 |
| 13 ft. | 156 in. | 195 | 260 | 325 | 390 | 455 | 585 | 715 | 845 |
| 14 ft. | 168 in. | 210 | 280 | 350 | 420 | 490 | 630 | 770 | 910 |
| 15 ft. | 180 in. | 225 | 300 | 375 | 450 | 525 | 675 | 825 | 975 |
| 16 ft. | 192 in. | 240 | 320 | 400 | 480 | 560 | 720 | 880 | 1040 |
| 17 ft. | 204 in. | 255 | 340 | 425 | 510 | 595 | 765 | 935 | 1105 |
| 18 ft. | 216 in. | 270 | 360 | 450 | 540 | 630 | 810 | 990 | 1170 |
| 19 ft. | 228 in. | 285 | 380 | 475 | 570 | 665 | 855 | 1045 | 1235 |
| 20 ft. | 240 in. | 300 | 400 | 500 | 600 | 700 | 900 | 1100 | 1300 |
| 21 ft. | 252 in. | 315 | 420 | 525 | 630 | 735 | 945 | 1155 | 1365 |
| 22 ft. | 264 in. | 330 | 440 | 550 | 660 | 770 | 990 | 1210 | 1430 |
| 23 ft. | 276 in. | 345 | 460 | 575 | 690 | 805 | 1035 | 1265 | 1495 |
| 24 ft. | 288 in. | 360 | 480 | 600 | 720 | 840 | 1080 | 1320 | 1560 |

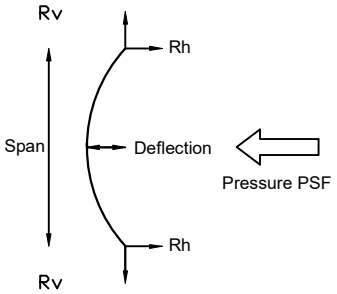


| LOADS ON EXISTING STRUCTURE FROM SCREEN SYSTEM<br>Rv= PARALLEL LOADS (PLF) | | | | | | | | | |
|---|---|---|---|---|---|---|---|---|---|
| Span in feet | Span in inches | PRESSURE (PSF) | | | | | | | |
| | | 30 psf | 40 psf | 50 psf | 60 psf | 70 psf | 90 psf | 110 psf | 130 psf |
| 3 ft. | 38 in. | 59 | 76 | 92 | 109 | 126 | 129 | 127 | 128 |
| 4 ft. | 48 in. | 78 | 101 | 123 | 145 | 168 | 172 | 169 | 171 |
| 5 ft. | 60 in. | 98 | 126 | 154 | 182 | 369 | 215 | 211 | 214 |
| 6 ft. | 72 in. | 118 | 151 | 185 | 218 | 251 | 258 | 253 | 257 |
| 7 ft. | 84 in. | 137 | 176 | 215 | 254 | 293 | 301 | 296 | 299 |
| 8 ft. | 96 in. | 157 | 201 | 246 | 291 | 335 | 344 | 338 | 342 |
| 9 ft. | 108 in. | 177 | 227 | 277 | 327 | 377 | 387 | 380 | 385 |
| 10 ft. | 120 in. | 196 | 252 | 308 | 363 | 419 | 430 | 422 | 428 |
| 11 ft. | 132 in. | 216 | 277 | 338 | 400 | 461 | 474 | 464 | 470 |
| 12 ft. | 144 in. | 235 | 302 | 369 | 436 | 503 | 517 | 507 | 513 |
| 13 ft. | 156 in. | 255 | 327 | 400 | 472 | 545 | 560 | 549 | 556 |
| 14 ft. | 168 in. | 275 | 353 | 431 | 509 | 587 | 603 | 591 | 599 |
| 15 ft. | 180 in. | 294 | 378 | 461 | 545 | 629 | 646 | 633 | 641 |
| 16 ft. | 192 in. | 314 | 403 | 492 | 581 | 670 | 689 | 676 | 684 |
| 17 ft. | 204 in. | 333 | 428 | 523 | 618 | 712 | 732 | 718 | 727 |
| 18 ft. | 216 in. | 353 | 453 | 554 | 654 | 754 | 775 | 760 | 770 |
| 19 ft. | 228 in. | 373 | 479 | 584 | 690 | 796 | 818 | 802 | 812 |
| 20 ft. | 240 in. | 392 | 504 | 615 | 727 | 838 | 861 | 844 | 855 |
| 21 ft. | 252 in. | 412 | 529 | 646 | 763 | 880 | 904 | 887 | 898 |
| 22 ft. | 264 in. | 431 | 554 | 677 | 799 | 922 | 947 | 929 | 941 |
| 23 ft. | 276 in. | 451 | 579 | 707 | 836 | 964 | 990 | 971 | 984 |
| 24 ft. | 288 in. | 471 | 604 | 738 | 872 | 1006 | 1033 | 1013 | 1026 |

NOTES:

1. Deflections are delivered from test results.
2. Deflection is the minimum glass separation measured at mid span of the screen and subject to rational analysis.
3. Reaction Rh can be positive (towards structure) or negative (away from structure).
4. Rv is always tension as shown.

GORDON M. DIBATTISTO LICENSE No PE82328 STATE OF FLORIDA PROFESSIONAL ENGINEER

GORDON DIBATTISTO, P.E.
P.E. No: 82328 (FL)
10/23/2023
VALID ONLY WITH ORIGINAL SEAL
REPRODUCTION WITHOUT WRITTEN CONSENT, VERIFICATION, ADDITIONS, OR OTHER MARKINGS TO THIS DOCUMENT ARE NOT PERMITTED AND INVALIDATE OUR CERTIFICATION.

DOP ENGINEERING
1505 SW 147TH AVE.
PEMBROKE PINES, FL 33027
(561)-569-8707
OFFICE@DOPENGINEERING.COM
REGISTRY No. 34110


Armor Screen Corp.
2744 Hillsboro Road
West Palm Beach, FL
ArmorScreen.com
(561) 841-8890


TITLE:

ARMOR SCREEN SERIES 2000 BUCKLE & STRAP SYSTEM

FL #

FL 812

DATE: 04/23/2015

REVISION DATE: 10/23/2023

SCALE: N.T.S.



2013 © ARMOR SCREEN CORPORATION