LANSING BUILDING PRODUCTS

Featuring ANCHORSafe Storm Protection Products

2" x 28GA STEEL STORM PANEL (NON-HVHZ)
IMPACT RATED / NON-HVHZ RATED

NON-SITE-SPECIFIC STRUCTURAL PERFORMANCE EVALUATION. A DESIGN PROFESSIONAL SHALL BE RESPONSIBLE FOR CERTIFYING THE APPLICATION OF THIS INFORMATION TO ANY SITE-SPECIFIC LOCATION.

NOTE REGARDING USE OF THIS DOCUMENT & USE OUTSIDE FLORIDA:

NON-SITE-SPECIFIC STRUCTURAL PERFORMANCE EVALUATION. THIS PRODUCT EVALUATION IS VALID FOR USE IN **FLORIDA ONLY**. USE OF THIS EVALUATION REQUIRES A REVIEW & CERTIFICATION BY A LOCAL DESIGN PROFESSIONAL WHO SHALL BE RESPONSIBLE FOR THE PROPER ADAPTATION OF THIS GENERAL PERFORMANCE EVALUATION TO ANY SITE-SPECIFIC PROJECT. CONTACT THIS OFFICE AT **ENGINEERINGEXPRESS.COM/QUOTE** FOR ASSISTANCE WITH YOUR PROJECT-SPECIFIC NEEDS & FOR ADAPTATION & CERTIFICATION OF THIS DOCUMENT OUTSIDE OF FLORIDA.

COLBY BENNARDO
PE# 95197 CA# 9885

COLBY BENNARDO LICENSE No 95197 STATE OF FLORIDA PROFESSIONAL ENGINEER

JUNE 20, 2025

Digitally signed by Colby Bennardo
Date: 2025.06.23 13:49:46 -04'00'

FL 7989.1

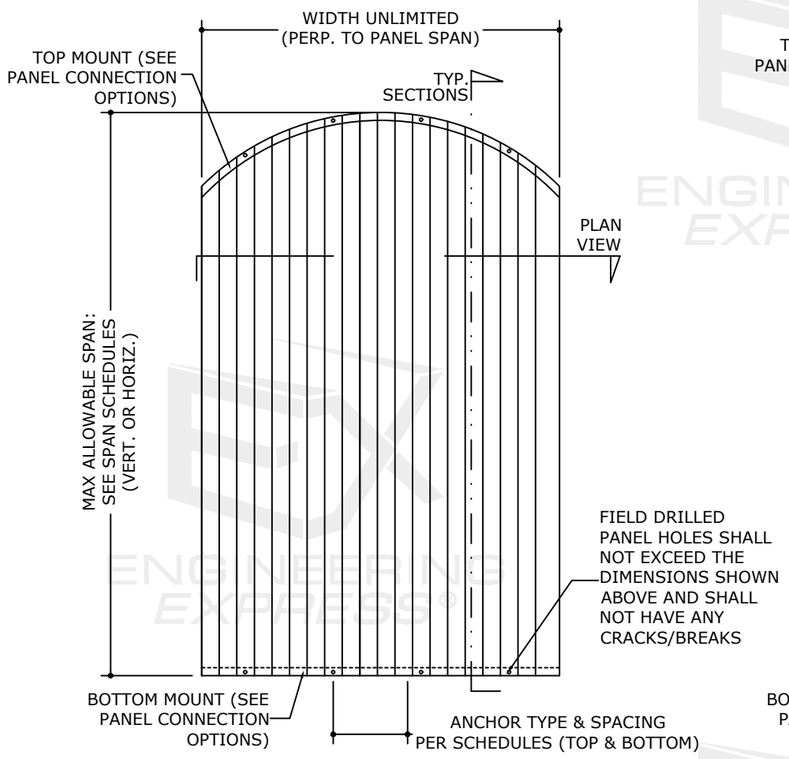

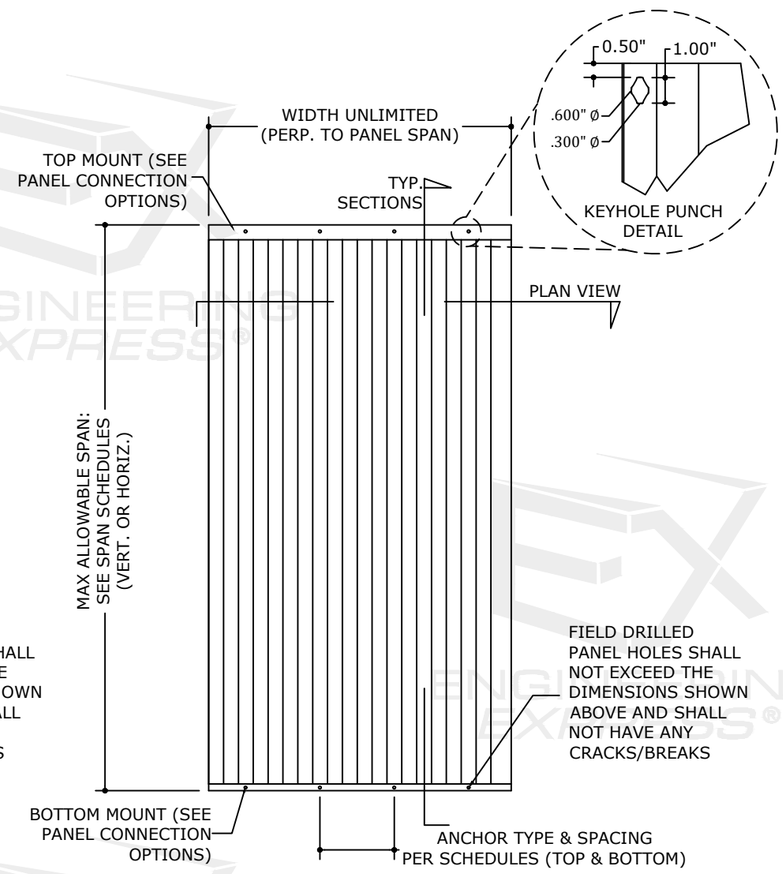

1 / 1 TYPICAL VERTICAL MOUNT ELEVATION

N.T.S. ELEVATION

DESIGN NOTES:

POSITIVE & NEGATIVE (ASD) DESIGN PRESSURES FOR USE WITH THIS SYSTEM SHALL BE DETERMINED ON A SITE-SPECIFIC BASIS AND COMPARED TO LIMITING FACTORS AS STIPULATED HEREIN. THEY SHALL BE CALCULATED IN ACCORDANCE WITH THE GOVERNING CODE REQUIREMENTS & IN ACCORDANCE WITH ASCE 7-22 AND CHAPTER 1609 OF THE FLORIDA BUILDING CODE. THEY SHALL BE LESS THAN OR EQUAL TO THE POSITIVE OR NEGATIVE DESIGN PRESSURE CAPACITY VALUES LISTED HEREIN FOR ANY ASSEMBLY AS SHOWN. NOT APPROVED FOR USE WITHIN THE HIGH VELOCITY HURRICANE ZONE (HVHZ)

TOP & BOTTOM DETAILS SHOWN MAY BE INTERCHANGED AS FIELD CONDITIONS DICTATE. PANELS MAY BE MOUNTED VERTICALLY OR HORIZONTALLY AS APPLICABLE.

MAXIMUM ALLOWABLE DESIGN PRESSURES (ASD): AS NOTED IN DESIGN SCHEDULES

GENERAL NOTES:

1. THIS SPECIFICATION HAS BEEN DESIGNED AND SHALL BE FABRICATED IN ACCORDANCE WITH THE REQUIREMENTS OF THE FLORIDA BUILDING CODE 8TH EDITION (2023) FOR USE OUTSIDE OF THE HVHZ, PER ASTM E330, E1886 & E1996 TEST PROTOCOLS. CONTRACTOR SHALL INVESTIGATE AND CONFORM TO ALL LOCAL BUILDING CODE AMENDMENTS WHICH MAY APPLY. DESIGN CRITERIA BEYOND AS STATED HEREIN MAY REQUIRE ADDITIONAL SITE-SPECIFIC SEALED ENGINEERING.
2. THE ARCHITECT/ENGINEER OF RECORD FOR THE PROJECT SUPERSTRUCTURE WITH WHICH THIS DESIGN IS USED SHALL BE RESPONSIBLE FOR THE INTEGRITY OF ALL SUPPORTING SURFACES TO THIS DESIGN WHICH SHALL BE COORDINATED BY THE PERMITTING CONTRACTOR.
3. SEPARATE 'SITE-SPECIFIC' SIGNED AND SEALED ENGINEERING SHALL BE REQUIRED IN ORDER TO DEVIATE, INTERPOLATE, AND EXTRAPOLATE FROM LOADS, DEFLECTIONS, OR SPANS CONTAINED HEREIN. CONTACT THIS ENGINEER AND VISIT THE ACCOMPANYING DIGITAL INFORMATION REFERENCED HEREIN FOR ALTERNATE SPAN CALCULATIONS AS MAY BE REQUIRED.
4. THE SYSTEM DETAILED HEREIN IS GENERIC AND DOES NOT PROVIDE INFORMATION FOR A SPECIFIC SITE. FOR SITE CONDITIONS DIFFERENT FROM THE CONDITIONS DETAILED HEREIN, A LICENSED ENGINEER OR REGISTERED ARCHITECT SHALL PREPARE SITE SPECIFIC DOCUMENTS FOR USE IN CONJUNCTION WITH THIS DOCUMENT.
5. DESIGN PRESSURES NOTED HEREIN ARE BASED ON MAXIMUM TESTED PRESSURES DIVIDED BY A 1.5 SAFETY FACTOR
6. ALL FASTENERS TO BE "Ø OR GREATER SAE GRADE 5 UNLESS NOTED OTHERWISE.
7. FASTENERS SHALL BE CADMIUM-PLATED OR OTHERWISE CORROSION-RESISTANT MATERIAL AND SHALL COMPLY WITH "SPECIFICATIONS FOR ALUMINUM STRUCTURES" SECTION J.3 BY THE ALUMINUM ASSOCIATION, INC., & ANY APPLICABLE FEDERAL, STATE, AND/OR LOCAL CODES.
8. REFER TO FASTENER MANUFACTURER'S PUBLISHED DATA SHEETS AND RECOMMENDATIONS FOR FASTENER INSTALLATION INSTRUCTIONS.
9. ALL STORM PANELS SHALL BE ASTM A653, CS-TYPE B, Fy=30KSI MIN, GALVANIZED STEEL AND CONFORM TO THE SPECIFICATIONS LISTED HEREIN.
10. ALL ALUMINUM EXTRUSIONS SHALL BE 6063-T6 ALUMINUM ALLOY OR BETTER, UNLESS NOTED OTHERWISE.
11. CONCRETE ANCHORS NOTED HEREIN SHALL BE EMBEDDED TO NON-CRACKED CONCRETE ONLY. INSTALL ALL CONCRETE ANCHORS PER MANUFACTURER'S RECOMMENDATIONS.
12. THE CONTRACTOR IS RESPONSIBLE TO INSULATE OR PROTECT ALL MEMBERS FROM DISSIMILAR MATERIALS TO PREVENT ELECTROLYSIS.
13. ENGINEER SEAL AFFIXED HERE TO VALIDATES STRUCTURAL DESIGN AS SHOWN ONLY. USE OF THIS SPECIFICATION BY CONTRACTOR, et. al. INDEMNIFIES & SAVES HARMLESS THIS ENGINEER FOR ALL COST & DAMAGES INCLUDING LEGAL FEES & APPELLATE FEES RESULTING FROM MATERIAL FABRICATION, SYSTEM ERECTION, & CONSTRUCTION PRACTICES BEYOND THAT WHICH IS CALLED FOR BY LOCAL, STATE, & FEDERAL CODES & FROM DEVIATIONS OF THIS PLAN.
14. EXCEPT AS EXPRESSLY PROVIDED HEREIN, NO ADDITIONAL CERTIFICATIONS OR AFFIRMATIONS ARE INTENDED.
15. ALTERATIONS, ADDITIONS, OR OTHER MARKINGS TO THIS DOCUMENT ARE NOT PERMITTED AND INVALIDATE THIS CERTIFICATION.
16. UNITS SHALL BE LABELED IN ACCORDANCE WITH THE FLORIDA BUILDING COMMISSION AND THE FLORIDA DEPARTMENT OF BUSINESS & PROFESSIONAL REGULATION SPECIFICATION.

VISIT ECALC.IO/LANSING

FOR SITE-SPECIFIC DEVIATIONS & MORE INFORMATION ABOUT THIS DOCUMENT OR SCAN THIS QR CODE

VISIT ENGINEERINGEXPRESS.COM/STORE FOR ADDITIONAL PLANS, REPORTS & RESOURCES

ENGINEERING EXPRESS®
POSTAL ADDRESS:
401 W. ATLANTIC AVE R10 BOX 219
DELRAY BEACH, FL 33444
ENGINEERINGEXPRESS.COM

LANSING BUILDING PRODUCTS
4537 TRANSPORT DRIVE, BLDG 5
TAMPA, FL 33605
(813) 440 - 6282

2" X 28GA STEEL STORM PANEL
FLORIDA BUILDING CODE EIGHTH EDITION (2023)
FLORIDA STATEWIDE APPROVAL

REMARKS	DRWN	CHKD	DATE
INIT ISSUE	CSL	RWN	10/14/20
2023 FBC	MDF	CCB	8/15/23

COPYRIGHT ENGINEERING EXPRESS®

23-63217.1

SCALE: NTS UNLESS NOTED

6/20/2025 4:39 PM RICHARDNEETPE\Users\richardneetpe\engineering express\production - documents\projects\23-\23-63217 2023 product fbc update fl7989\work\23-63217.1b - fl7989.1 - 28ga dwg.dwg

SCHEDULES 1-2: MAX ALLOWABLE SPANS

2" x 28GA STEEL PANELS

SCHEDULE 1
MAX ALLOWABLE SPAN SCHEDULE FOR USE w/: **DIRECT MOUNTS AND EXTRUSION 2**

PANEL SPAN	ALLOWABLE DESIGN PRESSURE	
106''	+ 40 PSF	- 35 PSF
100''	+ 42 PSF	- 37 PSF
94''	+ 44 PSF	- 39 PSF
88''	+ 46 PSF	- 42 PSF
82''	+ 49 PSF	- 45 PSF
76''	+ 52 PSF	- 49 PSF
70''	+ 55 PSF	- 53 PSF
64''	+ 60 PSF	- 58 PSF
58''	+ 65 PSF	- 64 PSF
53''	+ 70 PSF	- 70 PSF

SCHEDULE 2
MAX ALLOWABLE SPAN SCHEDULE FOR USE w/ EXTRUSIONS: **3, 4, 4.1**

PANEL SPAN	ALLOWABLE DESIGN PRESSURE	
106''	+ 35 PSF	- 35 PSF
100''	+ 37 PSF	- 37 PSF
94''	+ 40 PSF	- 39 PSF
88''	+ 42 PSF	- 42 PSF
82''	+ 45 PSF	- 45 PSF
76''	+ 49 PSF	- 49 PSF
70''	+ 53 PSF	- 53 PSF
64''	+ 58 PSF	- 58 PSF
58''	+ 64 PSF	- 64 PSF
53''	+ 70 PSF	- 70 PSF

HEADER/SILL EXTRUSIONS:
2 ..... BUILD-OUT F-TRACK
3 ..... H-HEADER
4 ..... STUD ANGLE (WALL MOUNT)
4.1..... STUD ANGLE (TRAP MOUNT)

SPAN SCHEDULE NOTES:

1. SELECT SPAN SCHEDULE BASED ON HEADER/SILL EXTRUSION TYPE OR DIRECT MOUNTING CONDITION. ENTER SCHEDULE WITH PANEL SPAN AND DETERMINE MAX ALLOWABLE POSITIVE/NEGATIVE DESIGN PRESSURES.
2. LINEAR INTERPOLATION BETWEEN LOADS IS ACCEPTABLE, OTHERWISE USE NEXT HIGHER LOAD.

SCHEDULE 3: SEPARATION FROM GLASS

2" x 28GA STEEL PANELS

SCHEDULE 3
MINIMUM STORM PANEL SEPARATION FROM GLASS

PANEL SPAN	INSTALLATIONS ≤ 30' ABOVE GRADE	INSTALLATIONS > 30' ABOVE GRADE
106''	3.00 ''	2.25 ''
100''	3.00 ''	2.00 ''
94''	3.00 ''	2.00 ''
88''	3.00 ''	1.75 ''
82''	3.00 ''	1.75 ''
76''	3.00 ''	1.50 ''
70''	3.00 ''	1.50 ''
64''	3.00 ''	1.50 ''
58''	3.00 ''	1.50 ''
53''	1.25 ''	1.25 ''

GLASS SEPARATION NOTES:

1. THIS SCHEDULE SHALL APPLY FOR ALL INSTALLATIONS THAT ARE REQUIRED TO MAINTAIN A MINIMUM SEPARATION BETWEEN THE STORM PANEL AND ANY GLAZING, AS REQUIRED BY THE BUILDING DEPARTMENT OR AUTHORITY HAVING JURISDICTION.
2. ENTER SEPARATION SCHEDULE WITH PANEL SPAN AND DETERMINE THE REQUIRED SEPARATION FROM GLASS.
3. SCHEDULE IS REQUIRED FOR USE WITH POSITIVE LOADS ONLY. INTERPOLATION BETWEEN LOADS IS ACCEPTABLE, OTHERWISE USE NEXT HIGHER LOAD.

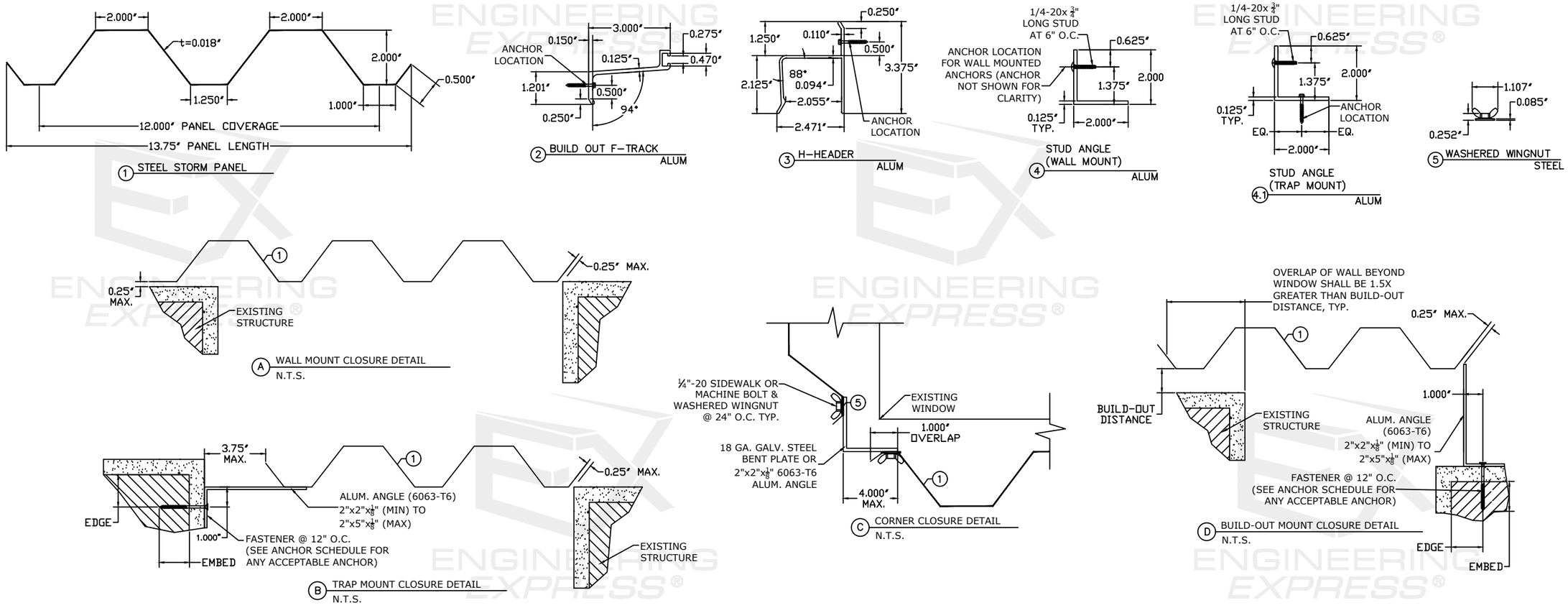

COLBY BENNARDO
PE# 95197 CA# 9885

COLBY BENNARDO LICENSE No 95197 STATE OF FLORIDA PROFESSIONAL ENGINEER
06/20/2025

JUNE 20, 2025

FL 7989.1

ENGINEERING EXPRESS®
POSTAL ADDRESS:
401 W. ATLANTIC AVE R10 BOX 219
DELRAY BEACH, FL 33444
ENGINEERINGEXPRESS.COM

LANSING BUILDING PRODUCTS
4537 TRANSPORT DRIVE, BLDG 5
TAMPA, FL 33605
(813) 440 - 6282

2" X 28GA STEEL STORM PANEL
FLORIDA BUILDING CODE EIGHTH EDITION (2023)
FLORIDA STATEWIDE APPROVAL

REMARKS	DRWN	CHKD	DATE
INIT ISSUE	CSL	RWN	10/14/20
2023 FBC	MDF	CCB	8/15/23

COPYRIGHT ENGINEERING EXPRESS®

23-63217.1

SCALE: NTS UNLESS NOTED

6/20/2025 4:39 PM RICHARDNEETPE\users\richardneetpe\engineering express\production - documents\projects\23-\23-63217 2023 product fbc update fl7989\work\23-63217.1b - fl7989.1 - 28ga dwg.dwg

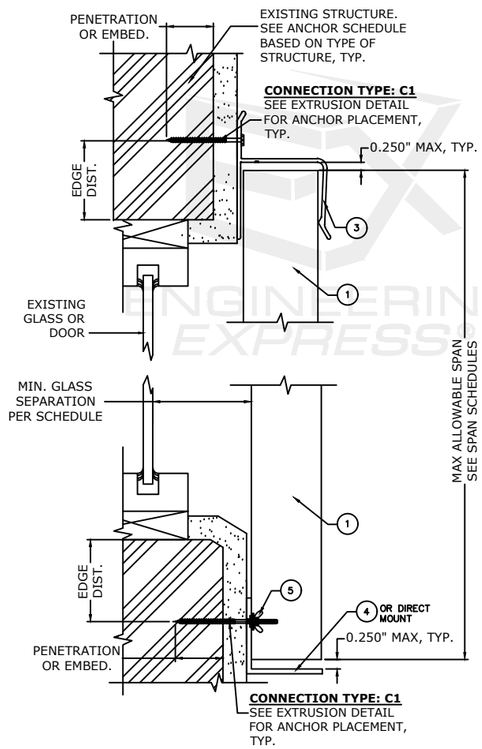

A WALL MOUNT SECTION
NTS

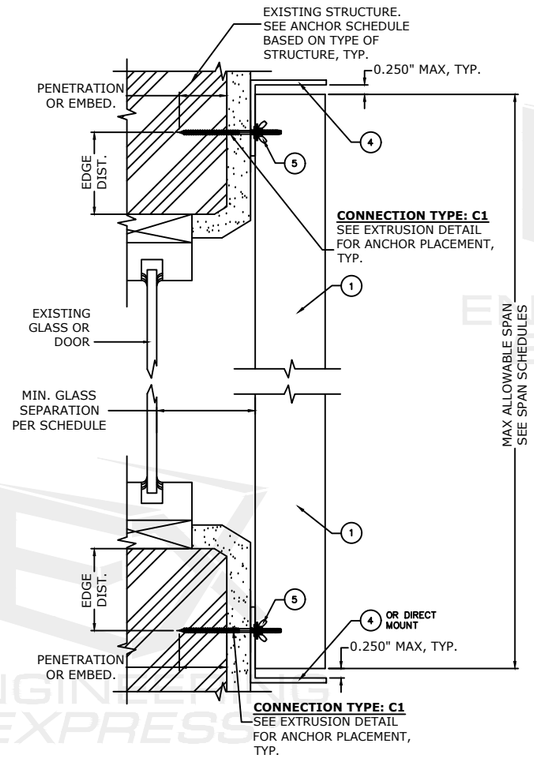

B WALL MOUNT SECTION
NTS

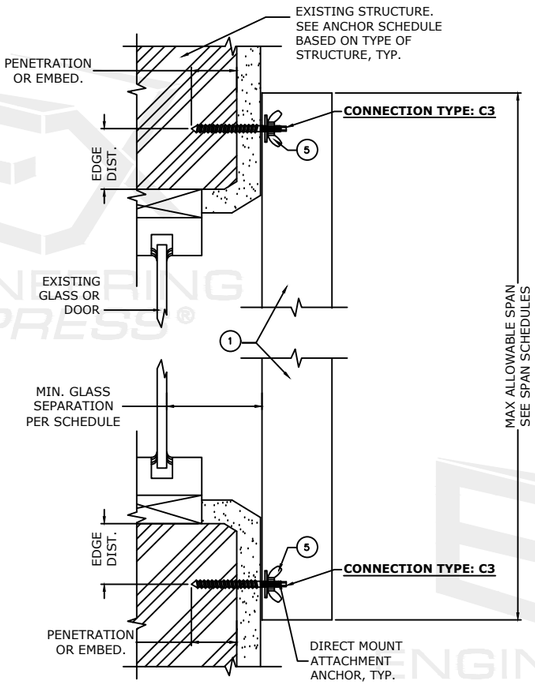

C DIRECT MOUNT SECTION
NTS

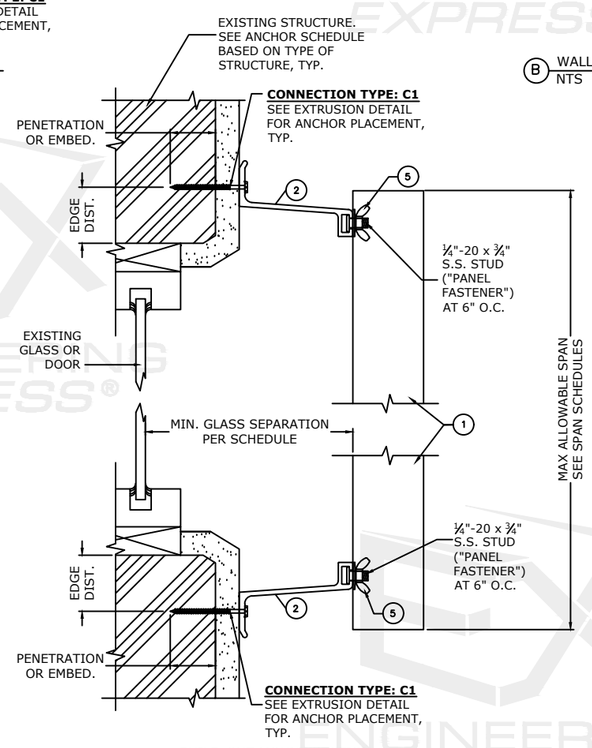

D BUILD-OUT MOUNT SECTION
NTS

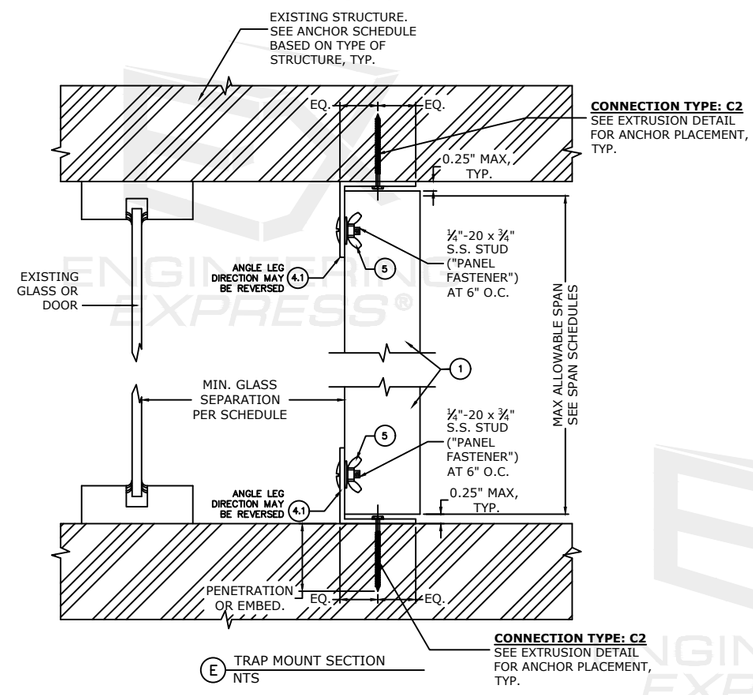

E TRAP MOUNT SECTION
NTS

COLBY BENNARDO
PE# 95197 CA# 9885

COLBY BENNARDO LICENSE No 95197 STATE OF FLORIDA PROFESSIONAL ENGINEER
06/19/2025

JUNE 20, 2025

FL 7989.1

ENGINEERING EXPRESS®
POSTAL ADDRESS:
401 W. ATLANTIC AVE R10 BOX 219
DELRAY BEACH, FL 33444
ENGINEERINGEXPRESS.COM

LANSING BUILDING PRODUCTS
4537 TRANSPORT DRIVE, BLDG 5
TAMPA, FL 33605
(813) 440 - 6282

2" X 28GA STEEL STORM PANEL
FLORIDA BUILDING CODE EIGHTH EDITION (2023)
FLORIDA STATEWIDE APPROVAL

REMARKS	DRWN	CHKD	DATE
INIT ISSUE	CSL	RWN	10/14/20
2023 FBC	MDF	CCB	8/15/23
-	-	-	-
-	-	-	-
-	-	-	-

COPYRIGHT ENGINEERING EXPRESS®

23-63217.1

SCALE: NTS UNLESS NOTED

6/20/2025 4:39 PM RICHARDNEETPE\users\richardneetpe\engineering express\production - documents\projects\23-\23-63217 2023 product fbc update fl7989\work\23-63217.1b - fl7989.1 - 28ga dwg.dwg

ANCHOR SPACING SCHEDULES:

HOST STRUCT.	ANCHOR	LOAD (psf)	ANCHOR SPACING BY SPAN AND CONNECTION TYPE: Spans Up To 4'-5" CONN TYPE C1	C2	C3	Spans Up To 6'-6" CONN TYPE C1	C2	C3	Spans Up To 8'-10" CONN TYPE C1	C2	C3
CONCRETE	1/4" ITW TAPCON or DEWALT ULTRACON WITH 1-3/4" EMBED AND 1-1/2" MIN EDGE DISTANCE (3050 psi MIN CONCRETE)	35	12.0"	12.0"	6.0"	12.0"	11.5"	6.0"	12.0"	8.5"	6.0"
		41	12.0"	12.0"	6.0"	12.0"	10.0"	6.0"	12.0"	7.0"	6.0"
		47	12.0"	12.0"	6.0"	12.0"	8.5"	6.0"	12.0"	6.0"	6.0"
		53	12.0"	11.0"	6.0"	12.0"	7.5"	6.0"	12.0"	5.5"	6.0"
		59	12.0"	10.0"	6.0"	12.0"	6.5"	6.0"	12.0"	5.0"	6.0"
		65	12.0"	9.0"	6.0"	12.0"	6.0"	6.0"	12.0"	4.5"	6.0"
		70	12.0"	8.5"	6.0"	12.0"	5.5"	6.0"	12.0"	4.0"	6.0"
	1/4" ELCO/DEWALT PANELMATE (FEMALE, MALE, or PLUS) W/ 2" EMBED AND 2-1/2" MIN EDGE DISTANCE (3350 psi MIN CONC)	35	12.0"	12.0"	6.0"	12.0"	12.0"	6.0"	12.0"	10.0"	6.0"
		41	12.0"	12.0"	6.0"	12.0"	11.5"	6.0"	12.0"	8.5"	6.0"
		47	12.0"	12.0"	6.0"	12.0"	10.0"	6.0"	12.0"	7.5"	6.0"
		53	12.0"	12.0"	6.0"	12.0"	9.0"	6.0"	12.0"	6.5"	6.0"
		59	12.0"	12.0"	6.0"	12.0"	8.0"	6.0"	12.0"	6.0"	6.0"
		65	12.0"	10.5"	6.0"	12.0"	7.0"	6.0"	12.0"	5.0"	6.0"
		70	12.0"	10.0"	6.0"	12.0"	6.5"	6.0"	12.0"	5.0"	6.0"
	5/16" RED HEAD DYNABOLT SLEEVE ANCHOR & 1/4-20 BOLT W/ 1-1/4" EMBED AND 1-7/8" MIN EDGE DISTANCE (3000 psi MIN CONC)	35	12.0"	12.0"	6.0"	12.0"	12.0"	6.0"	12.0"	12.0"	6.0"
		41	12.0"	12.0"	6.0"	12.0"	12.0"	6.0"	12.0"	12.0"	6.0"
		47	12.0"	12.0"	6.0"	12.0"	12.0"	6.0"	12.0"	12.0"	6.0"
		53	12.0"	12.0"	6.0"	12.0"	12.0"	6.0"	12.0"	10.5"	6.0"
		59	12.0"	12.0"	6.0"	12.0"	12.0"	6.0"	12.0"	9.5"	6.0"
		65	12.0"	12.0"	6.0"	12.0"	12.0"	6.0"	12.0"	8.5"	6.0"
		70	12.0"	12.0"	6.0"	12.0"	11.0"	6.0"	12.0"	8.0"	6.0"
	1/4-20 DEWALT CALK-IN ANCHOR W/ 7/8" EMBED AND 3-1/2" MIN EDGE DISTANCE (3000 psi MIN CONCRETE)	35	12.0"	12.0"	6.0"	12.0"	12.0"	6.0"	12.0"	11.0"	6.0"
		41	12.0"	12.0"	6.0"	12.0"	12.0"	6.0"	12.0"	9.5"	6.0"
		47	12.0"	12.0"	6.0"	12.0"	11.0"	6.0"	12.0"	8.0"	6.0"
		53	12.0"	12.0"	6.0"	12.0"	10.0"	6.0"	12.0"	7.0"	6.0"
		59	12.0"	12.0"	6.0"	12.0"	9.0"	6.0"	12.0"	6.5"	6.0"
		65	12.0"	12.0"	6.0"	12.0"	8.0"	6.0"	12.0"	6.0"	6.0"
		70	12.0"	11.0"	6.0"	12.0"	7.5"	6.0"	12.0"	5.5"	6.0"
	1/4" DEWALT STEEL DROPIN ANCHOR W/ 1" EMBED AND 3-1/2" MIN EDGE DISTANCE (3000 psi MIN CONCRETE)	35	12.0"	12.0"	6.0"	12.0"	12.0"	6.0"	12.0"	12.0"	6.0"
		41	12.0"	12.0"	6.0"	12.0"	12.0"	6.0"	12.0"	12.0"	6.0"
		47	12.0"	12.0"	6.0"	12.0"	12.0"	6.0"	12.0"	10.5"	6.0"
		53	12.0"	12.0"	6.0"	12.0"	12.0"	6.0"	12.0"	9.0"	6.0"
		59	12.0"	12.0"	6.0"	12.0"	11.5"	6.0"	12.0"	8.5"	6.0"
		65	12.0"	12.0"	6.0"	12.0"	10.5"	6.0"	12.0"	7.5"	6.0"
		70	12.0"	12.0"	6.0"	12.0"	9.5"	6.0"	12.0"	7.0"	6.0"
	1/4 DEWALT ZAMAC NAILIN W/ 1-1/4" EMBED AND 3" MIN EDGE DISTANCE (3000 psi MIN CONCRETE)	35	12.0"	12.0"	6.0"	12.0"	9.0"	6.0"	12.0"	6.5"	6.0"
		41	12.0"	11.5"	6.0"	12.0"	8.0"	6.0"	12.0"	5.5"	6.0"
		47	12.0"	10.0"	6.0"	12.0"	7.0"	6.0"	12.0"	5.0"	6.0"
		53	12.0"	9.0"	6.0"	12.0"	6.0"	6.0"	10.5"	4.5"	6.0"
		59	12.0"	8.0"	6.0"	12.0"	5.5"	6.0"	9.5"	4.0"	6.0"
		65	12.0"	7.0"	6.0"	12.0"	5.0"	6.0"	8.5"	3.5"	6.0"
		70	12.0"	6.5"	6.0"	11.0"	4.5"	6.0"	8.0"	3.0"	6.0"
	1/4-20 ALL POINTS SOLID- SET WITH 7/8" EMBED AND 1-1/4" MIN EDGE DISTANCE (3000 psi MIN CONCRETE)	35	12.0"	12.0"	6.0"	12.0"	11.0"	6.0"	12.0"	8.0"	6.0"
		41	12.0"	12.0"	6.0"	12.0"	9.0"	6.0"	12.0"	6.5"	6.0"
		47	12.0"	12.0"	6.0"	12.0"	8.0"	6.0"	12.0"	6.0"	6.0"
		53	12.0"	10.5"	6.0"	12.0"	7.0"	6.0"	12.0"	5.0"	6.0"
		59	12.0"	9.5"	6.0"	12.0"	6.5"	6.0"	12.0"	4.5"	6.0"
		65	12.0"	8.5"	6.0"	12.0"	5.5"	6.0"	12.0"	4.0"	6.0"
		70	12.0"	8.0"	6.0"	12.0"	5.5"	6.0"	12.0"	4.0"	6.0"

HOST STRUCT.	ANCHOR	LOAD (psf)	ANCHOR SPACING BY SPAN AND CONNECTION TYPE: Spans Up To 4'-5" CONN TYPE C1	C2	C3	Spans Up To 6'-6" CONN TYPE C1	C2	C3	Spans Up To 8'-10" CONN TYPE C1	C2	C3
WOOD	1/4" ITW TAPCON WITH 1-3/8" THREAD PEN. AND 3/4" MIN EDGE DISTANCE (G=0.42 MIN)	35	12.0"	12.0"	6.0"	12.0"	9.0"	6.0"	12.0"	6.5"	6.0"
		41	12.0"	11.5"	6.0"	12.0"	7.5"	6.0"	12.0"	5.5"	6.0"
		47	12.0"	10.0"	6.0"	12.0"	6.5"	6.0"	12.0"	5.0"	6.0"
		53	12.0"	9.0"	6.0"	12.0"	6.0"	6.0"	12.0"	4.5"	6.0"
		59	12.0"	8.0"	6.0"	12.0"	5.5"	6.0"	12.0"	4.0"	6.0"
		65	12.0"	7.0"	6.0"	12.0"	4.5"	6.0"	11.5"	3.5"	6.0"
		70	12.0"	6.5"	6.0"	12.0"	4.5"	6.0"	10.5"	3.0"	6.0"
	1/4" DEWALT ULTRACON WITH 1-3/8" THREAD PEN. AND 3/4" MIN EDGE DISTANCE (G=0.42 MIN)	35	12.0"	12.0"	6.0"	12.0"	9.0"	6.0"	12.0"	6.5"	6.0"
		41	12.0"	11.5"	6.0"	12.0"	7.5"	6.0"	12.0"	5.5"	6.0"
		47	12.0"	10.0"	6.0"	12.0"	6.5"	6.0"	12.0"	5.0"	6.0"
		53	12.0"	9.0"	6.0"	12.0"	6.0"	6.0"	12.0"	4.5"	6.0"
		59	12.0"	8.0"	6.0"	12.0"	5.5"	6.0"	12.0"	4.0"	6.0"
		65	12.0"	7.0"	6.0"	12.0"	4.5"	6.0"	11.5"	3.5"	6.0"
		70	12.0"	6.5"	6.0"	12.0"	4.5"	6.0"	10.5"	3.0"	6.0"
	1/4" ELCO/DEWALT PANELMATE (FEMALE, MALE, or PLUS) W/ 1-7/8" EMBED AND 3/4" MIN EDGE DISTANCE (G=0.54 MIN)	35	12.0"	12.0"	6.0"	12.0"	12.0"	6.0"	12.0"	11.0"	6.0"
		41	12.0"	12.0"	6.0"	12.0"	12.0"	6.0"	12.0"	9.5"	6.0"
		47	12.0"	12.0"	6.0"	12.0"	11.0"	6.0"	12.0"	8.0"	6.0"
		53	12.0"	12.0"	6.0"	12.0"	10.0"	6.0"	12.0"	7.0"	6.0"
		59	12.0"	12.0"	6.0"	12.0"	9.0"	6.0"	12.0"	6.5"	6.0"
		65	12.0"	12.0"	6.0"	12.0"	8.0"	6.0"	12.0"	6.0"	6.0"
		70	12.0"	11.0"	6.0"	12.0"	7.5"	6.0"	12.0"	5.5"	6.0"
	1/4" ITW TAPCON STORM GUARD W/ 1-3/4" EMBED AND 1-1/4" MIN EDGE DISTANCE (G=0.42 MIN)	35	12.0"	12.0"	6.0"	12.0"	9.0"	6.0"	12.0"	6.5"	6.0"
		41	12.0"	11.5"	6.0"	12.0"	7.5"	6.0"	12.0"	5.5"	6.0"
		47	12.0"	10.0"	6.0"	12.0"	6.5"	6.0"	12.0"	5.0"	6.0"
		53	12.0"	9.0"	6.0"	12.0"	6.0"	6.0"	12.0"	4.5"	6.0"
		59	12.0"	8.0"	6.0"	12.0"	5.5"	6.0"	12.0"	4.0"	6.0"
		65	12.0"	7.0"	6.0"	12.0"	4.5"	6.0"	11.5"	3.5"	6.0"
		70	12.0"	6.5"	6.0"	12.0"	4.5"	6.0"	10.5"	3.0"	6.0"
	1/4-20 PANELMATE INSERT WITH 1-5/8" EMBED AND 3/4" MIN EDGE DISTANCE (G=0.42 MIN)	35	12.0"	12.0"	6.0"	12.0"	9.5"	6.0"	12.0"	7.0"	6.0"
		41	12.0"	12.0"	6.0"	12.0"	8.0"	6.0"	12.0"	6.0"	6.0"
		47	12.0"	10.5"	6.0"	12.0"	7.0"	6.0"	12.0"	5.0"	6.0"
		53	12.0"	9.5"	6.0"	12.0"	6.5"	6.0"	11.0"	4.5"	6.0"
		59	12.0"	8.5"	6.0"	12.0"	5.5"	6.0"	10.0"	4.0"	6.0"
		65	12.0"	7.5"	6.0"	12.0"	5.0"	6.0"	9.0"	3.5"	6.0"
		70	12.0"	7.0"	6.0"	11.5"	4.5"	6.0"	8.5"	3.5"	6.0"
	1/4" WOOD OR LAG SCREW WITH 1-3/8" MIN THREAD PEN. AND 3/4" MIN EDGE DISTANCE (G=0.42 MIN)	35	12.0"	12.0"	6.0"	12.0"	8.5"	6.0"	12.0"	6.0"	6.0"
		41	12.0"	10.5"	6.0"	12.0"	7.0"	6.0"	12.0"	5.0"	6.0"
		47	12.0"	9.0"	6.0"	12.0"	6.0"	6.0"	12.0"	4.5"	6.0"
		53	12.0"	8.0"	6.0"	12.0"	5.5"	6.0"	11.5"	4.0"	6.0"
		59	12.0"	7.5"	6.0"	12.0"	5.0"	6.0"	10.0"	3.5"	6.0"
		65	12.0"	6.5"	6.0"	12.0"	4.5"	6.0"	9.0"	3.0"	6.0"
		70	12.0"	6.0"	6.0"	11.5"	4.0"	6.0"	8.5"	3.0"	6.0"

HOST STRUCT.	ANCHOR	LOAD (psf)	ANCHOR SPACING BY SPAN AND CONNECTION TYPE: Spans Up To 4'-5" CONN TYPE C1	C2	C3	Spans Up To 6'-6" CONN TYPE C1	C2	C3	Spans Up To 8'-10" CONN TYPE C1	C2	C3
HOLLOW BLOCK or GROUT-FILLED BLOCK	1/4" ITW TAPCON or DEWALT ULTRACON WITH 1-3/4" EMBED AND 1-1/2" MIN EDGE DISTANCE (1900 psi MIN CMU)	35	12.0"	8.5"	6.0"	12.0"	5.5"	6.0"	9.0"	4.0"	6.0"
		41	12.0"	7.0"	6.0"	10.5"	5.0"	6.0"	7.5"		6.0"
		47	12.0"	6.0"	6.0"	9.0"	4.0"	6.0"	6.5"		6.0"
		53	12.0"	5.5"	6.0"	8.0"		6.0"	6.0"		6.0"
		59	10.5"	5.0"	6.0"	7.0"		6.0"	5.0"		5.0"
		65	9.5"	4.5"	6.0"	6.5"		6.0"	4.5"		4.5"
		70	9.0"	4.0"	6.0"	6.0"		6.0"	4.5"		4.5"
	1/4" ELCO PANELMATE (FEMALE, MALE, or PLUS) W/ 1-1/4" EMBED AND 2" MIN EDGE DISTANCE (2000 psi MIN CMU)	35	12.0"	12.0"	6.0"	12.0"	9.5"	6.0"	12.0"	7.0"	6.0"
		41	12.0"	12.0"	6.0"	12.0"	8.0"	6.0"	12.0"	6.0"	6.0"
		47	12.0"	10.5"	6.0"	12.0"	7.0"	6.0"	12.0"	5.0"	6.0"
		53	12.0"	9.0"	6.0"	12.0"	6.0"	6.0"	11.0"	4.5"	6.0"
		59	12.0"	8.0"	6.0"	12.0"	5.5"	6.0"	10.0"	4.0"	6.0"
		65	12.0"	7.5"	6.0"	12.0"	5.0"	6.0"	9.0"	3.5"	6.0"
		70	12.0"	7.0"	6.0"	11.5"	4.5"	6.0"	8.0"	3.5"	6.0"
	1/4-20 DEWALT CALK-IN W/ 7/8" EMBED AND 2-1/2" MIN EDGE DISTANCE (1500 psi MIN CMU w/GROUT FILL)	35	12.0"	12.0"	6.0"	12.0"	8.5"	6.0"	12.0"	6.5"	6.0"
		41	12.0"	11.0"	6.0"	12.0"	7.5"	6.0"	11.5"	5.5"	6.0"
		47	12.0"	9.5"	6.0"	12.0"	6.5"	6.0"	10.0"	4.5"	6.0"
		53	12.0"	8.5"	6.0"	12.0"	5.5"	6.0"	8.5"	4.0"	6.0"
		59	12.0"	7.5"	6.0"	10.5"	5.0"	6.0"	8.0"		6.0"
		65	12.0"	7.0"	6.0"	9.5"	4.5"	6.0"	7.0"		6.0"
		70	12.0"	6.5"	6.0"	9.0"	4.0"	6.0"	6.5"		6.0"
	1/4 DEWALT ZAMAC NAILIN W/ 1-1/4" EMBED AND 3" MIN EDGE DISTANCE (1500 psi MIN CMU)	35	12.0"	12.0"	6.0"	12.0"	8.5"	6.0"	12.0"	6.0"	6.0"
		41	12.0"	11.0"	6.0"	12.0"	7.5"	6.0"	12.0"	5.5"	6.0"
		47	12.0"	9.5"	6.0"	12.0"	6.5"	6.0"	11.5"	4.5"	6.0"
		53	12.0"	8.5"	6.0"	12.0"	5.5"	6.0"	10.0"	4.0"	6.0"
		59	12.0"	7.5"	6.0"	12.0"	5.0"	6.0"	9.0"		6.0"
		65	12.0"	6.5"	6.0"	11.0"	4.5"	6.0"	8.0"		6.0"
		70	12.0"	6.0"	6.0"	10.5"	4.0"	6.0"	7.5"		6.0"
	1/4-20 ALL POINTS SOLID- SET WITH 7/8" EMBED AND 1-1/4" MIN EDGE DISTANCE (1800 psi MIN CMU)	35	12.0"	9.0"	6.0"	12.0"	6.0"	6.0"	12.0"	4.5"	6.0"
		41	12.0"	8.0"	6.0"	12.0"	5.0"	6.0"	11.0"	4.0"	6.0"
		47	12.0"	7.0"	6.0"	12.0"	4.5"	6.0"	9.5"		6.0"
		53	12.0"	6.0"	6.0"	11.5"	4.0"	6.0"	8.5"		6.0"
		59	12.0"	5.5"	6.0"	10.0"		6.0"	7.5"		6.0"
		65	12.0"	5.0"	6.0"	9.0"		6.0"	6.5"		6.0"
		70	12.0"	4.5"	6.0"	8.5"		6.0"	6.0"		6.0"

ANCHOR NOTES:

1. ANCHOR SCHEDULE APPLIES TO ALL PRODUCTS CERTIFIED HEREIN, BUT ONLY PROVIDES MAXIMUM ALLOWABLE ANCHOR SPACING. MAXIMUM ALLOWABLE SPANS AND PRESSURES INDICATED IN SPAN SCHEDULE SHALL APPLY.
2. ENTER ANCHOR SCHEDULE BASED ON PANEL FASTENER SPACING, THE EXISTING STRUCTURE MATERIAL, & ANCHOR TYPE. SELECT DESIGN LOAD GREATER THAN OR EQUAL TO NEGATIVE DESIGN LOAD ON SHUTTER AND SELECT SPAN GREATER THAN OR EQUAL TO SHUTTER SPAN.SELECT CONNECTION TYPE BASED ON APPROPRIATE MOUNTING CONDITION (SEE MOUNTING DETAILS ON SHEET 3 FOR IDENTIFICATION OF CONNECTION TYPE).
3. "PANEL FASTENERS" ARE STUDS USED IN CONJUNCTION WITH ALL MOUNTING EXTRUSIONS ("F"-TRACK, STUDDED ANGLE, ETC.). "PANEL FASTENERS" SHALL BE SPACED AT 12" O.C. ALL END PANEL HOLES SHALL HAVE PANEL FASTENERS, TYP.
4. ANCHORS SHALL BE INSTALLED IN ACCORDANCE WITH MANUFACTURERS' RECOMMENDATIONS.
5. HOLLOW BLOCK HOST STRUCTURE SHALL CONFORM TO ASTM C90 BLOCK.
6. MINIMUM EMBEDMENT SHALL BE AS NOTED IN ANCHOR SCHEDULE.
7. MINIMUM EMBEDMENT AND EDGE DISTANCE EXCLUDES STUCCO, FOAM, BRICK, AND OTHER WALL FINISHES. WALL FINISHES SHALL BE LIMITED TO 1/4" MAX OR SHALL BE VERIFIED BY OTHERS TO ADEQUATELY TRANSFER LOADS TO HOST STRUCTURE.
8. CONCRETE ANCHORS NOTED HEREIN SHALL BE EMBEDDED TO UN-CRACKED CONCRETE ONLY.
9. WHERE EXISTING STRUCTURE IS WOOD FRAMING, EXISTING CONDITIONS MAY VARY. FIELD VERIFY THAT FASTENERS ARE INTO ADEQUATE WOOD FRAMING MEMBERS, NOT PLYWOOD. FASTENING TO PLYWOOD IS ACCEPTABLE ONLY FOR SIDE CLOSURE PIECES.
10. WHERE ANCHORS FASTEN TO NARROW FACE OF STUD FRAMING, FASTENER SHALL BE LOCATED IN CENTER OF NOMINAL 2" X 4" (MIN.) WOOD STUD (¾" EDGE DISTANCE IS ACCEPTABLE FOR WOOD FRAMING). WOOD STUD SHALL BE G=0.42 OR GREATER DENSITY, U.N.O. LAG SCREWS SHALL HAVE PHILLIPS PAN HEAD OR HEX HEAD.
11. REMOVABLE ANCHORS ARE: DEWALT PANELMATE, ALL-POINTS SOLID-SET, DEWALT CALK-IN & DROP-IN
12. MACHINE SCREWS SHALL HAVE 1/2" MINIMUM ENGAGEMENT OF THREADS INTO THE BASE ANCHOR AND MAY HAVE EITHER A PAN HEAD, TRUSS HEAD, OR WAFER HEAD (SIDEWALK BOLT) U.N.O.
13. ▨ DESIGNATES ANCHOR CONDITIONS WHICH ARE NOT ACCEPTABLE USES.
14. ✳ DIRECT MOUNTING CONDITIONS.
15. LINEAR INTERPOLATION IS NOT PERMITTED FOR USE WITH THE ANCHOR SCHEDULES LISTED ON THIS SHEET.
16. PROVIDE KEYHOLE WASHER FOR 1/4-20 SIDEWALK BOLTS (OR TRUSS HEAD SCREWS).
17. **ANCHOR SPACING FOR BUILD OUT CONDITIONS USING THE BUILD-OUT F-TRACK (PARTS 2) SHALL BE LIMITED TO A MAXIMUM 10" O.C. OR LESSER VALUE AS REQUIRED PER SCHEDULE.**

COLBY BENNARDO
PE# 95197 CA# 9885

JUNE 20, 2025

COLBY BENNARDO LICENSE No 95197 STATE OF FLORIDA PROFESSIONAL ENGINEER
06/20/2025

FL 7989.1

ENGINEERING EXPRESS®
POSTAL ADDRESS:
401 W. ATLANTIC AVE R10 BOX 219
DELRAY BEACH, FL 33444
ENGINEERINGEXPRESS.COM

LANSING BUILDING PRODUCTS
4537 TRANSPORT DRIVE, BLDG 5
TAMPA, FL 33605
(813) 440 - 6282

2" X 28GA STEEL STORM PANEL
FLORIDA BUILDING CODE EIGHTH EDITION (2023)
FLORIDA STATEWIDE APPROVAL

REMARKS	DRWN	CHKD	DATE
INIT ISSUE	CSL	RWN	10/14/20
2023 FBC	MDF	CCB	8/15/23

COPYRIGHT ENGINEERING EXPRESS®

23-63217.1

SCALE: NTS UNLESS NOTED

6/20/2025 4:39 PM RICHARDNEETPE\users\richardneetpe\engineering express\production - documents\projects\23-\23-\23-63217 2023 product fbc update fl7989\work\23-63217.1b - fl7989.1 - 28ga dwg.dwg