NOTES

1. DESIGNED AND TESTED IN ACCORDANCE WITH FLORIDA BLDG CODE AND INTERNATIONAL BLDG CODE. PROFESSIONAL ENGINEER'S SEAL PROVIDED ONLY FOR VERIFICATION OF WIND LOAD CONSTRUCTION DETAILS.
2. SPACING IS THE CENTER TO CENTER DIMENSION.
3. INDICATES SLAT FREQUENCY IN WHICH WINDLOCKS OCCUR.
4. WALL ANGLES MAY BE WELDED TO STEEL JAMBS. APPLY PLUG WELDS IN THE WALL ANGLE SLOTS THE THICKNESS OF THE ANGLE OR FILLET WELD AT THE HEEL AND TOE OF THE WALL ANGLE 2" LONG AT EACH SPECIFIED BOLT LOCATION TO HOLD THE LOADS LISTED IN THE GUIDE TABLE.
5. "E" GUIDE DOORS HAVE THREE WALL FASTENER LENGTHS, THEY ARE:
   - 3/8" DIA(GRADE 2) = 1" LONG WALL BOLT
   - 3/8" DIA(GRADE 5) = 1-1/2" LONG WALL BOLT
   - 1/2" DIA = 1-1/2" LONG WALL BOLT
6. ASTM-A36 GUIDE ANGLE MATERIAL.
7. DOORS AT 5'-6" WIDE WILL HAVE NO WINDBAR.
8. REFERENCE C-275 SLAT DRAWING 086140.
9. DOOR OPENINGS 18'-4" AND LESS USE 22GA SLATS
   DOOR OPENINGS OVER 18'-4" USE 20GA SLATS
10. THE ANCHOR USED TO ATTACH THE Z-GUIDE TO THE CONCRETE JAMB ARE FOR HILTI KBTZ2 (P/N 609420-XXXX) OR EQUIVALENT. THE JAMB MINIMUM STRENGTH AND THICKNESS TO SUPPORT THE ANCHOR MUST SATISFY THE TABLE:

| ANCHOR DIAMETER | ANCHOR EMBEDMENT | CONCRETE STRENGTH | CONCRETE THICKNESS |
|---|---|---|---|
| 3/8" | All | 3000PSI MIN | 6" MIN |
| 1/2" | 4" MIN | 3000PSI MIN | 7.5" MIN |
| 1/2" | 5" MIN | 3000PSI MIN | 9" MIN |
| 5/8" | 5-1/2" MIN | 4000PSI MIN | 9" MIN |
| 5/8" | 6" MIN | 4000PSI MIN | 12" MIN |

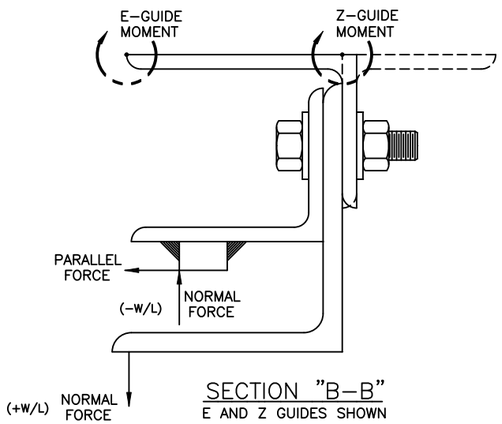


SECTION "B-B"
E AND Z GUIDES SHOWN

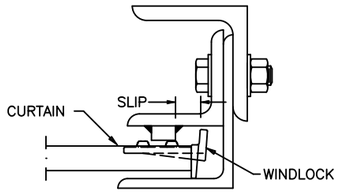


WINDLOCK/WINDBAR RELATIONSHIP DETAIL

"E"-GUIDE

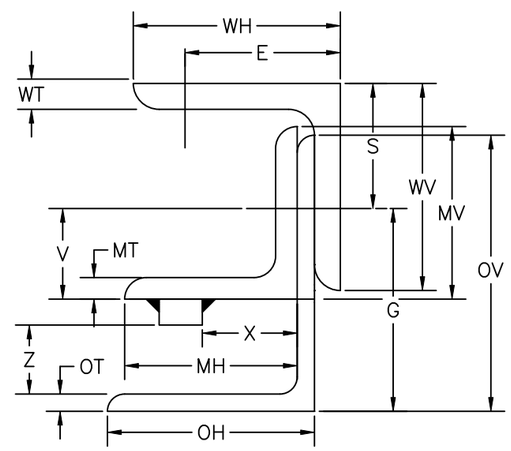


"Z"-GUIDE

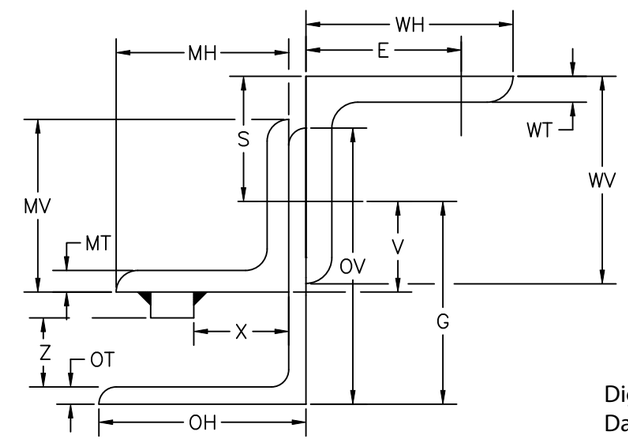


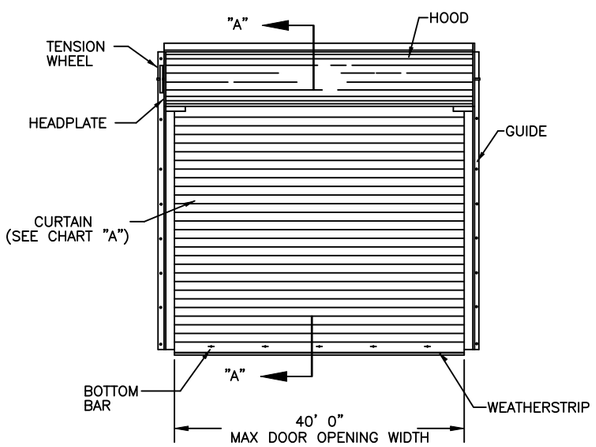


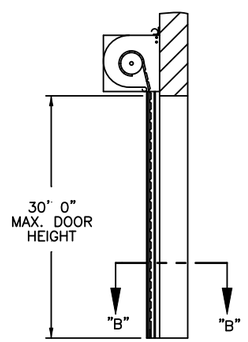


SECTION "A-A"

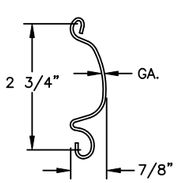


SLAT DETAIL

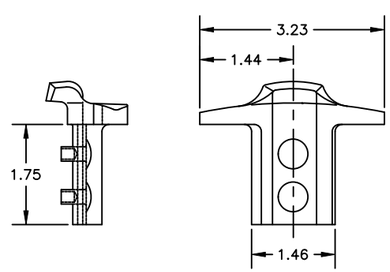


C-275 ALT. WINDLOCK DETAIL

| | | E-GUIDE | | | | | | | | Z-GUIDE | | | | | | | NOTES |
|---|---|---|---|---|---|---|---|---|---|---|---|---|---|---|---|---|---|
| | | WIND PRESSURE | | | | | | | | WIND PRESSURE | | | | | | | |
| DOOR OPENING WIDTH | | 5'-6" | 10'-9" | 15' | 20' | 25' | 30' | 35' | 40' | 8'-6" | 15' | 20' | 25' | 30' | 35' | 40' | |
| WALL HORIZONTAL | WH | 2-1/2 | 3 | 3-1/2 | 3-1/2 | 4 | 4 | 4 | 4 | 2-1/2 | 3-1/2 | 3-1/2 | 4 | 4 | 5 | 5 | |
| WALL VERTICAL | WV | 3 | 3 | 2-1/2 | 3 | 3 | 3 | 3 | 3 | 3 | 2-1/2 | 3 | 3 | 3 | 3 | 3 | |
| WALL THICKNESS | WT | 3/16 | 3/16 | 5/16 | 3/8 | 3/8 | 1/2 | 1/2 | 1/2 | 3/16 | 5/16 | 3/8 | 3/8 | 1/2 | 1/2 | 1/2 | |
| MIDDLE HORIZONTAL | MH | 2 | 2-1/2 | 3 | 3 | 3-1/2 | 3-1/2 | 3-1/2 | 3-1/2 | 2-1/2 | 3 | 3 | 3-1/2 | 3-1/2 | 3-1/2 | 3-1/2 | |
| MIDDLE VERTICAL | MV | 2 | 2 | 2 | 2 | 2-1/2 | 2-1/2 | 2-1/2 | 2-1/2 | 2 | 2 | 2 | 2-1/2 | 2-1/2 | 2-1/2 | 2-1/2 | |
| MIDDLE THICKNESS | MT | 3/16 | 3/16 | 1/4 | 5/16 | 5/16 | 3/8 | 3/8 | 3/8 | 3/16 | 1/4 | 5/16 | 5/16 | 3/8 | 3/8 | 3/8 | |
| OUTSIDE HORIZONTAL | OH | 2-1/2 | 3 | 3-1/2 | 3-1/2 | 4 | 4 | 4 | 4 | 3 | 3-1/2 | 3-1/2 | 4 | 4 | 4 | 4 | |
| OUTSIDE VERTICAL | OV | 3 | 4 | 4 | 4 | 4 | 4 | 4 | 4 | 4 | 4 | 4 | 4 | 4 | 4 | 4 | |
| OUTSIDE THICKNESS | OT | 3/16 | 1/4 | 1/4 | 1/4 | 1/4 | 1/4 | 5/16 | 5/16 | 1/4 | 1/4 | 1/4 | 1/4 | 1/4 | 5/16 | 5/16 | |
| E | E | 1-3/4 | 2-1/4 | 2-1/4 | 2-1/4 | 2-1/2 | 2-1/2 | 2-1/2 | 2-1/2 | 1-1/2 | 2-3/4 | 2-3/4 | 3-1/4 | 3-1/4 | 4-1/4 | 4-1/4 | |
| S | S | 2-1/4 | 1-5/8 | 1-13/16 | 1-13/16 | 1-13/16 | 2 | 2 | 2 | 1-5/8 | 1-13/16 | 1-13/16 | 1-13/16 | 2 | 2 | 2 | |
| V | V | 15/16 | 1-3/16 | 1-1/4 | 1-5/16 | 1-5/16 | 1-3/8 | 1-3/8 | 1-3/8 | 1-3/16 | 1-1/4 | 1-5/16 | 1-5/16 | 1-3/8 | 1-3/8 | 1-3/8 | |
| G | G | 2-1/4 | 2-7/8 | 2-15/16 | 3 | 3 | 3-1/16 | 3-1/8 | 3-1/8 | 2-7/8 | 2-15/16 | 3 | 3 | 3-1/16 | 3-1/8 | 3-1/8 | |
| X | X | NONE | 1-3/8 | 1-1/2 | 2-3/8 | 2-1/2 | 2-3/4 | 2-3/4 | 2-3/4 | 1-3/8 | 1-1/2 | 2-3/8 | 2-1/2 | 2-3/4 | 2-3/4 | 2-3/4 | |
| Z | Z | NONE | 1-1/16 | 1-1/16 | 1-1/16 | 1-1/16 | 1-1/16 | 1-1/16 | 1-1/16 | 1-1/16 | 1-1/16 | 1-1/16 | 1-1/16 | 1-1/16 | 1-1/16 | 1-1/16 | |
| SLIP | | NONE | 1/2 | 5/8 | 1-1/2 | 1-3/4 | 2 | 2 | 2 | 1/2 | 5/8 | 1-1/2 | 1-3/4 | 2 | 2 | 2 | |
| WALL BOLT SIZE | | 3/8 | 3/8 | 1/2 | 1/2 | 1/2 | 1/2 | 1/2 | 1/2 | 3/8 | 3/8 | 1/2 | 1/2 | 1/2 | 5/8 | N/A | |
| WALL BOLT GRADE | | 2 | 2 | 5 | 5 | 5 | 5 | 5 | 5 | N/A | N/A | N/A | N/A | N/A | N/A | N/A | 6 |
| WALL BOLT EMBED | | N/A | N/A | N/A | N/A | N/A | N/A | N/A | N/A | 2-1/2 | 4 | 4 | 5 | 5 | 6 | N/A | 12 |
| WALL BOLT SPACING | | 36 | 18 | 18 | 18 | 18 | 12 | 10 | 9 | 18 | 12 | 12 | 12 | 11 | 9 | N/A | 2 |
| ASSEMBLY BOLT SIZE | | 3/8 | 3/8 | 1/2 | 1/2 | 1/2 | 5/8 | 5/8 | 5/8 | 3/8 | 1/2 | 1/2 | 1/2 | 5/8 | 5/8 | 5/8 | |
| ASSEMBLY BOLT GRADE | | 2 | 2 | 5 | 5 | 5 | 5 | 5 | 5 | 2 | 5 | 5 | 5 | 5 | 5 | 5 | |
| ASSEMBLY BOLT SPACING | | 36 | 18 | 15 | 16 | 12 | 12 | 9 | 8 | 18 | 18 | 16 | 12 | 13 | 10 | 8 | 2 |
| WINDLOCK FREQUENCY | | 0 | 2 | 2 | 2 | 2 | 1 | 1 | 1 | 2 | 2 | 2 | 2 | 1 | 1 | 1 | 3 |
| MOMENT (IN*LBS/FT) | | 292 | 1988 | 4775 | 5928 | 8188 | 11078 | 13829 | 16849 | 667 | 4679 | 5775 | 7996 | 10770 | 13560 | 16439 | |
| NORMAL (LBS/FT) | | 113 | 220 | 308 | 410 | 513 | 615 | 718 | 820 | 174 | 308 | 410 | 513 | 615 | 718 | 820 | |
| PARALLEL (LBS/FT) | | 0 | 455 | 1149 | 1269 | 1790 | 2278 | 2910 | 3577 | 86 | 1149 | 1269 | 1790 | 2278 | 2910 | 3577 | |

REVISIONS

| EN/ER | REV | DESCRIPTION | DATE | APPROVAL |
|---|---|---|---|---|
| 500149 | H | REVISE PER ER | 6/23/09 | MS |
| 500341 | J | REVISE PER ER | 2/17/10 | MS |
| 32728 | K | REVISE PER PCR | 10/19/22 | DG |

PRINTED COPIES OF THIS DOCUMENT ARE NOT CONSIDERED SIGNED AND SEALED AND THE SIGNATURE MUST BE VERIFIED ON ANY ELECTRONIC COPIES.

JOHN E. SCATES LICENSE No. 51737 STATE OF FLORIDA PROFESSIONAL ENGINEER


JOHN E. SCATES, PE
2560 KING ARTHUR BLVD, STE 124-54
LEWISVILLE, TX 75056
FL. PE 51737/TX PE 56308/F-2203


Digitally signed by John E Scates
Date: 2023.09.26 17:38:22 -05'00'

| REF DWG | USED ON |
|---|---|
| | |

THIRD ANGLE PROJECTION

ASME Y14.100 AND Y14.5 APPLY, UNLESS OTHERWISE SPECIFIED. DIMENSIONS ARE IN U.S. CUSTOMARY UNITS.

TOLERANCES UNLESS OTHERWISE SPECIFIED: FRACTIONS ± 1/16"

FINISH: N/A

UNIT OF MEASURE: N/A

OVERHEAD DOOR the original since 1921 DALLAS, TEXAS

MATERIAL: N/A

| | NAME | DATE |
|---|---|---|
| DRAWN BY: | K. WOLFF | 11/19/02 |
| CHECKED BY: | JD FAW | 1/24/03 |
| APPROVED BY: | DM WELLS | 1/24/03 |

DRAWING TITLE: WINDLOAD, 610/611, C-275, +41/-41 PSF (DESIGN)

DRAWING NUMBER: D- 308090

SCALE: N/A SHEET 1 OF 1