NOTES

1. DESIGNED AND TESTED IN ACCORDANCE WITH FLORIDA BLDG CODE AND INTERNATIONAL BLDG CODE. PROFESSIONAL ENGINEER'S SEAL PROVIDED ONLY FOR VERIFICATION OF WIND LOAD CONSTRUCTION DETAILS.
2. SPACING IS THE CENTER TO CENTER DIMENSION.
3. INDICATES SLAT FREQUENCY IN WHICH WINDLOCKS OCCUR.
4. WALL ANGLES MAY BE WELDED TO STEEL JAMBS. APPLY PLUG WELDS IN THE WALL ANGLE SLOTS THE THICKNESS OF THE ANGLE OR FILLET WELD AT THE HEEL AND TOE OF THE WALL ANGLE 2" LONG AT EACH SPECIFIED BOLT LOCATION TO HOLD THE LOADS LISTED IN THE GUIDE TABLE.
5. "E" GUIDE DOORS HAVE THREE WALL FASTENER LENGTHS, THEY ARE:
   - 3/8" DIA(GRADE 2) = 1" LONG WALL BOLT
   - 3/8" DIA(GRADE 5) = 1-1/2" LONG WALL BOLT
   - 1/2" DIA = 1-1/2" LONG WALL BOLT
6. ASTM-A36 GUIDE ANGLE MATERIAL.
7. DOORS AT 5'-9" WIDE WILL HAVE NO WINDBAR.
8. REFERENCE C-275 SLAT DRAWING 086140.
9. DOOR OPENINGS 18'-4" AND LESS USE 22GA SLATS
   DOOR OPENINGS OVER 18'-4" USE 20GA SLATS
10. THE ANCHOR USED TO ATTACH THE Z-GUIDE TO THE CONCRETE JAMB ARE FOR HILTI KBTZ2 (P/N 609420-XXXX) OR EQUIVALENT. THE JAMB MINIMUM STRENGTH AND THICKNESS TO SUPPORT THE ANCHOR MUST SATISFY THE TABLE:

ANCHOR DIAMETER	ANCHOR EMBEDMENT	CONCRETE STRENGTH	CONCRETE THICKNESS
3/8"	All	3000PSI MIN	6" MIN
1/2"	4" MIN	3000PSI MIN	7.5" MIN
1/2"	5" MIN	3000PSI MIN	9" MIN
5/8"	5-1/2" MIN	4000PSI MIN	9" MIN
5/8"	6" MIN	4000PSI MIN	12" MIN

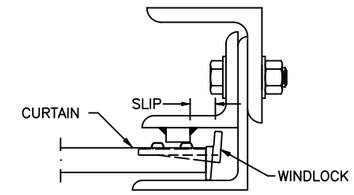

WINDLOCK/WINDBAR RELATIONSHIP DETAIL

REVISIONS				
EN/ER	REV	DESCRIPTION	DATE	APPROVAL
500149	H	REVISE PER ER	6/23/09	MS
500341	J	REVISE PER ER	2/17/10	MS
32728	K	REVISE PER PCR	10/19/22	DG

PRINTED COPIES OF THIS DOCUMENT ARE NOT CONSIDERED SIGNED AND SEALED AND THE SIGNATURE MUST BE VERIFIED ON ANY ELECTRONIC COPIES.

JOHN E. SCATES LICENSE No. 51737 STATE OF FLORIDA PROFESSIONAL ENGINEER

JOHN E. SCATES, PE
2560 KING ARTHUR BLVD, STE 124-54
LEWISVILLE, TX 75056
FL. PE 51737/TX PE 56308/F-2203

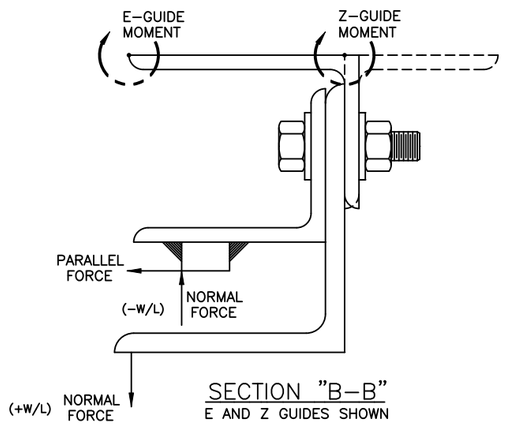

SECTION "B-B"
E AND Z GUIDES SHOWN

"E"-GUIDE

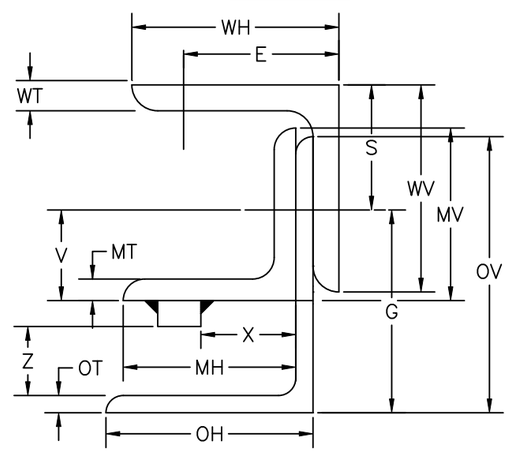

"Z"-GUIDE

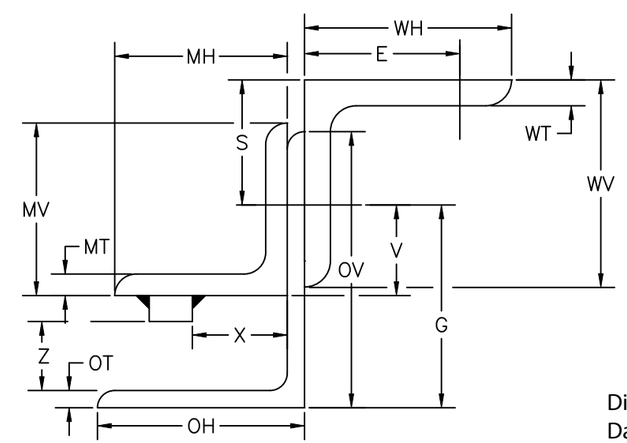

Digitally signed by John E Scates
Date: 2023.09.26 17:39:08 -05'00'

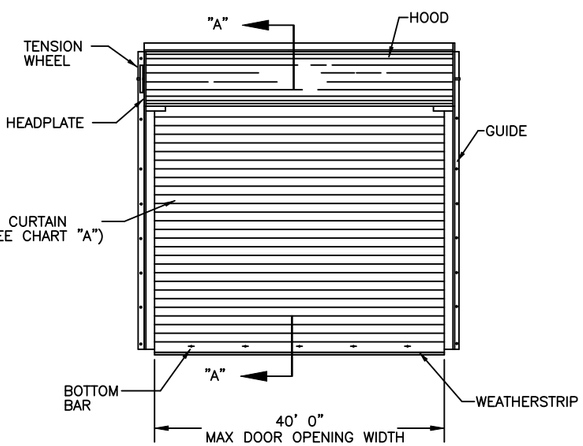

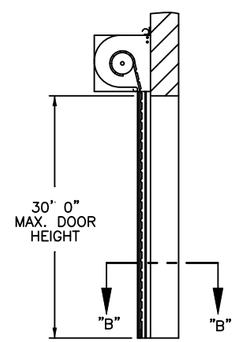

SECTION "A-A"

		E-GUIDE								Z-GUIDE							NOTES
		WIND PRESSURE								WIND PRESSURE							
DOOR OPENING WIDTH		5'-9"	10'-4"	15'	20'	25'	30'	35'	40'	9'-3"	15'	20'	25'	30'	35'	40'	
WALL HORIZONTAL	WH	2-1/2	3	3-1/2	3-1/2	4	4	4	4	2-1/2	3-1/2	3-1/2	4	4	5	5	
WALL VERTICAL	WV	3	3	2-1/2	3	3	3	3	3	3	2-1/2	3	3	3	3	3	
WALL THICKNESS	WT	3/16	3/16	1/4	5/16	3/8	3/8	1/2	1/2	3/16	1/4	5/16	3/8	3/8	1/2	1/2	
MIDDLE HORIZONTAL	MH	2	2-1/2	3	3	3-1/2	3-1/2	3-1/2	3-1/2	2-1/2	3	3	3-1/2	3-1/2	3-1/2	3-1/2	
MIDDLE VERTICAL	MV	2	2	2	2	2-1/2	2-1/2	2-1/2	2-1/2	2	2	2	2-1/2	2-1/2	2-1/2	2-1/2	
MIDDLE THICKNESS	MT	3/16	3/16	3/16	1/4	5/16	5/16	3/8	3/8	3/16	3/16	1/4	5/16	5/16	3/8	3/8	
OUTSIDE HORIZONTAL	OH	2-1/2	3	3-1/2	3-1/2	4	4	4	4	3	3-1/2	3-1/2	4	4	4	4	
OUTSIDE VERTICAL	OV	3	4	4	4	4	4	4	4	4	4	4	4	4	4	4	
OUTSIDE THICKNESS	OT	3/16	1/4	1/4	1/4	1/4	1/4	5/16	5/16	1/4	1/4	1/4	1/4	1/4	5/16	5/16	
E	E	1-3/4	2-1/4	2-1/4	2-1/4	2-1/2	2-1/2	2-1/2	2-1/2	1-1/2	2-3/4	2-3/4	3-1/4	3-1/4	4-1/4	4-1/4	
S	S	2-1/4	1-5/8	1-13/16	1-13/16	1-13/16	1-13/16	2	2	1-5/8	1-13/16	1-13/16	1-13/16	1-13/16	2	2	
V	V	15/16	1-3/16	1-1/4	1-1/4	1-5/16	1-5/16	1-3/8	1-3/8	1-3/16	1-1/4	1-1/4	1-5/16	1-5/16	1-3/8	1-3/8	
G	G	2-1/4	2-7/8	2-15/16	2-15/16	3	3	3-1/8	3-1/8	2-7/8	2-15/16	2-15/16	3	3	3-1/8	3-1/8	
X	X	NONE	1-3/8	1-1/2	2-3/8	2-1/2	2-3/4	2-3/4	2-3/4	1-3/8	1-1/2	2-3/8	2-1/2	2-3/4	2-3/4	2-3/4	
Z	Z	NONE	1-1/16	1-1/16	1-1/16	1-1/16	1-1/16	1-1/16	1-1/16	1-1/16	1-1/16	1-1/16	1-1/16	1-1/16	1-1/16	1-1/16	
SLIP		NONE	1/2	5/8	1-1/2	1-3/4	2	2	2	1/2	5/8	1-1/2	1-3/4	2	2	2	
WALL BOLT SIZE		3/8	3/8	3/8	1/2	1/2	1/2	1/2	1/2	3/8	3/8	1/2	1/2	1/2	5/8	N/A	
WALL BOLT GRADE		2	2	5	5	5	5	5	5	N/A	N/A	N/A	N/A	N/A	N/A	N/A	6
WALL BOLT EMBED		N/A	N/A	N/A	N/A	N/A	N/A	N/A	N/A	2-1/2	3-1/2	4	4	5	5-1/2	N/A	12
WALL BOLT SPACING		36	18	18	18	18	14	12	10	18	13	12	12	12	10	N/A	2
ASSEMBLY BOLT SIZE		3/8	3/8	1/2	1/2	1/2	1/2	5/8	5/8	3/8	1/2	1/2	1/2	1/2	5/8	5/8	
ASSEMBLY BOLT GRADE		2	2	2	5	5	5	5	5	2	2	5	5	5	5	5	
ASSEMBLY BOLT SPACING		36	18	12	18	13	9	10	9	18	14	18	15	12	12	9	2
WINDLOCK FREQUENCY		0	2	2	2	2	2	2	1	2	2	2	2	2	2	1	3
MOMENT (IN*LBS/FT)		268	1314	4034	4790	7126	9115	12108	14678	725	3967	4678	6957	8913	11872	14408	
NORMAL (LBS/FT)		104	186	270	360	450	540	630	720	167	270	360	450	540	630	720	
PARALLEL (LBS/FT)		0	270	967	1086	1554	1987	2546	3134	110	967	1086	1554	1987	2546	3134	

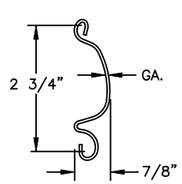

SLAT DETAIL

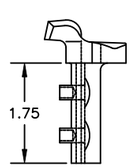

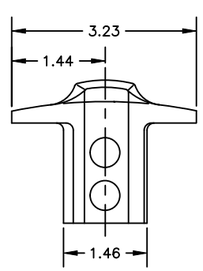

C-275 ALT. WINDLOCK DETAIL

REF DWG	USED ON

THIRD ANGLE PROJECTION

ASME Y14.100 AND Y14.5 APPLY, UNLESS OTHERWISE SPECIFIED DIMENSIONS ARE IN U.S. CUSTOMARY UNITS.

TOLERANCES UNLESS OTHERWISE SPECIFIED
FRACTIONS ± 1/16"

FINISH N/A

UNIT OF MEASURE N/A

OVERHEAD DOOR the original since 1921 DALLAS, TEXAS

MATERIAL: N/A

	NAME	DATE
DRAWN BY:	K. WOLFF	11/19/02
CHECKED BY:	JD FAW	1/24/03
APPROVED BY:	DM WELLS	1/24/03

DRAWING TITLE: WINDLOAD, 610/611, C-275, +36/-36 PSF (DESIGN)

DRAWING NUMBER D- 308089

SCALE: N/A SHEET 1 OF 1