NOTES

1. DESIGNED AND TESTED IN ACCORDANCE WITH FLORIDA BLDG CODE AND INTERNATIONAL BLDG CODE. PROFESSIONAL ENGINEER'S SEAL PROVIDED ONLY FOR VERIFICATION OF WIND LOAD CONSTRUCTION DETAILS.
2. SPACING IS THE CENTER TO CENTER DIMENSION.
3. INDICATES SLAT FREQUENCY IN WHICH WINDLOCKS OCCUR.
4. WALL ANGLES MAY BE WELDED TO STEEL JAMBS. APPLY PLUG WELDS IN THE WALL ANGLE SLOTS THE THICKNESS OF THE ANGLE OR FILLET WELD AT THE HEEL AND TOE OF THE WALL ANGLE 2" LONG AT EACH SPECIFIED BOLT LOCATION TO HOLD THE LOADS LISTED IN THE GUIDE TABLE.
5. "E" GUIDE DOORS HAVE THREE WALL FASTENER LENGTHS, THEY ARE:
   - 3/8" DIA(GRADE 2) = 1" LONG WALL BOLT
   - 3/8" DIA(GRADE 5) = 1-1/2" LONG WALL BOLT
   - 1/2" DIA = 1-1/2" LONG WALL BOLT
6. IMPACT RATED DOORS TO BE CONSTRUCTED ACCORDING TO COLUMNS LABELED "IMPACT" AND ARE LIMITED TO THE WIDTHS INDICATED. IMPACT TEST CONDUCTED IN ACCORDANCE WITH TAS 201/2036.
7. ASTM-A36 GUIDE ANGLE MATERIAL.
8. DOORS AT 4'-9" WIDE WILL HAVE NO WINDBAR.
9. REFERENCE C-187 SLAT DRAWING 307225.
10. DOOR OPENINGS 15'-4" AND LESS USE 22GA SLATS
    DOOR OPENINGS OVER 15'-4" USE 20GA SLATS
11. THE ANCHOR USED TO ATTACH THE Z-GUIDE TO THE CONCRETE JAMB ARE FOR HILTI KBTZ2 (P/N 609420-XXXX) OR EQUIVALENT. THE JAMB MINIMUM STRENGTH AND THICKNESS TO SUPPORT THE ANCHOR MUST SATISFY THE TABLE:

ANCHOR DIAMETER	ANCHOR EMBEDMENT	CONCRETE STRENGTH	CONCRETE THICKNESS
3/8"	All	3000PSI MIN	6" MIN
1/2"	4" MIN	3000PSI MIN	7.5" MIN
1/2"	5" MIN	3000PSI MIN	9" MIN
5/8"	5-1/2" MIN	4000PSI MIN	9" MIN
5/8"	6" MIN	4000PSI MIN	12" MIN

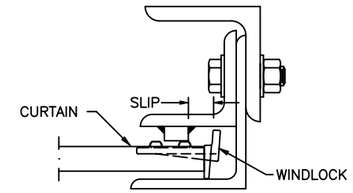

WINDLOCK/WINDBAR RELATIONSHIP DETAIL

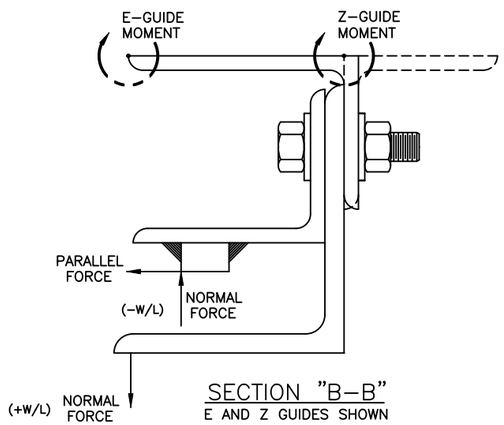

SECTION "B-B"
E AND Z GUIDES SHOWN

"E"-GUIDE

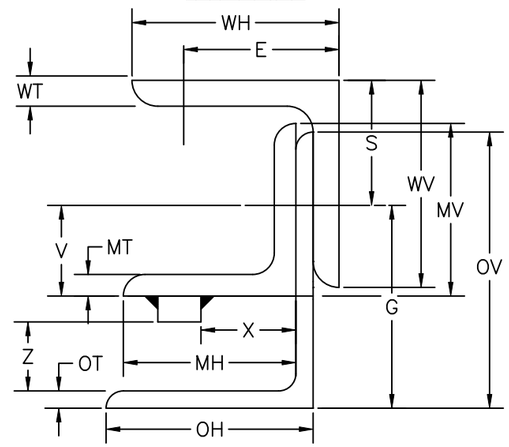

"Z"-GUIDE

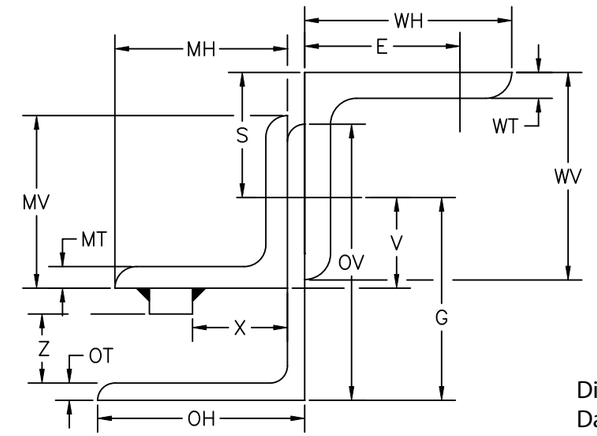

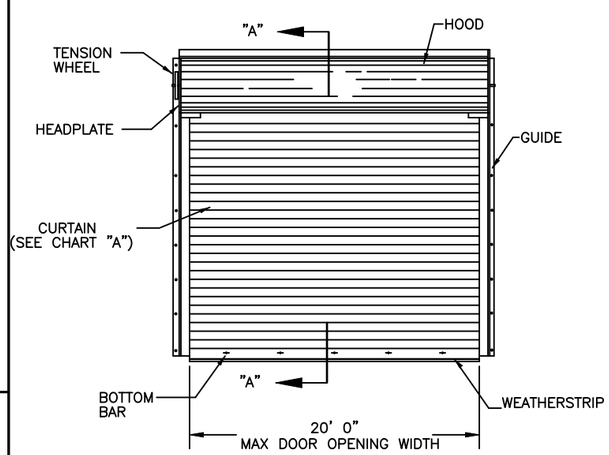

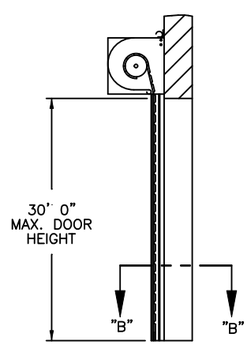

SECTION "A-A"

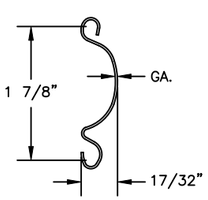

SLAT DETAIL

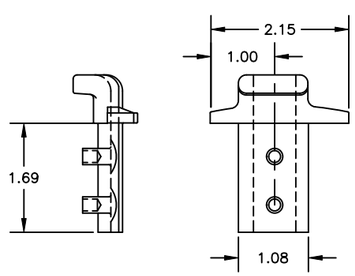

C-187 ALT. WINDLOCK DETAIL

		E-GUIDE WIND PRESSURE								Z-GUIDE WIND PRESSURE							NOTES
DOOR OPENING WIDTH		4'-9"	9'	15'	20'	25'	30'	35'	10' IMPACT	7'-9"	15'	20'	25'	30'	35'	10' IMPACT	
WALL HORIZONTAL	WH	2-1/2	3	3-1/2	3-1/2	N/A			3	3	3-1/2	3-1/2	N/A			4	
WALL VERTICAL	WV	3	2	2-1/2	2-1/2				3	2	2-1/2	2-1/2				3	
WALL THICKNESS	WT	3/16	3/16	5/16	3/8				1/4	3/16	5/16	3/8				1/4	
MIDDLE HORIZONTAL	MH	2	2-1/2	3	3				2-1/2	2-1/2	3	3				2-1/2	
MIDDLE VERTICAL	MV	2	2	2	2				2	2	2	2				2	
MIDDLE THICKNESS	MT	3/16	3/16	1/4	5/16				3/16	3/16	1/4	5/16				3/16	
OUTSIDE HORIZONTAL	OH	2-1/2	3	3-1/2	3-1/2				3	3	3-1/2	3-1/2				3	
OUTSIDE VERTICAL	OV	3	3-1/2	3-1/2	3-1/2				3-1/2	3-1/2	3-1/2	3-1/2				3-1/2	
OUTSIDE THICKNESS	OT	3/16	1/4	1/4	1/4				1/4	1/4	1/4	1/4				1/4	
E	E	1-3/4	2-1/4	2-1/4	2-1/4				2-1/4	2-1/4	2-3/4	2-3/4				3-1/4	
S	S	2-1/4	1-3/16	1-3/4	1-3/4				1-7/16	1-3/16	1-3/4	1-3/4				1-7/16	
V	V	1-1/4	1-1/4	1-5/16	1-5/16				1-1/4	1-1/4	1-5/16	1-5/16				1-1/4	
G	G	2-1/4	2-11/16	2-3/4	2-3/4				2-11/16	2-11/16	2-3/4	2-3/4				2-11/16	
X	X	NONE	1-1/4	1-1/4	2-1/8				1-1/4	1-1/4	1-1/4	2-1/8				1-1/4	
Z	Z	NONE	13/16	13/16	13/16				13/16	13/16	13/16	13/16				13/16	
SLIP		NONE	1/2	5/8	1-1/2				1/2	1/2	5/8	1-1/2				1/2	
WALL BOLT SIZE		3/8	3/8	1/2	1/2				3/8	3/8	1/2	1/2				3/8	
WALL BOLT GRADE		2	2	5	5				5	N/A	N/A	N/A				N/A	6
WALL BOLT EMBED		N/A	N/A	N/A	N/A				N/A	2-1/2	4	4				3-1/2	12
WALL BOLT SPACING		36	15	18	16				11	15	12	12				14	2
ASSEMBLY BOLT SIZE		3/8	3/8	1/2	1/2				3/8	3/8	1/2	1/2				3/8	
ASSEMBLY BOLT GRADE		2	5	5	5				5	2	5	5				5	
ASSEMBLY BOLT SPACING		36	18	10	9				12	18	12	10				12	2
WINDLOCK FREQUENCY		0	2	2	2				1	2	2	2				1	3
MOMENT (IN*LBS/FT)		308	2058	6613	7628				2912	1330	6496	7440				2850	
NORMAL (LBS/FT)		119	225	375	500				250	194	375	500				250	
PARALLEL (LBS/FT)		0	547	1658	1728				757	326	1658	1728				757	

REVISIONS

EN/ER	REV	DESCRIPTION	DATE	APPROVAL
500149	H	REVISE PER ER	6/23/09	MS
500341	J	REVISE PER ER	2/17/10	MS
32728	K	REVISE PER PCR	10/19/22	DG

PRINTED COPIES OF THIS DOCUMENT ARE NOT CONSIDERED SIGNED AND SEALED AND THE SIGNATURE MUST BE VERIFIED ON ANY ELECTRONIC COPIES.

JOHN E. SCATES LICENSE No. 51737 STATE OF FLORIDA PROFESSIONAL ENGINEER

JOHN E. SCATES, PE
2560 KING ARTHUR BLVD, STE 124-54
LEWISVILLE, TX 75056
FL. PE 51737/TX PE 56308/F-2203

Digitally signed by John E Scates
Date: 2023.09.26 17:41:12 -05'00'

REF DWG	USED ON

THIRD ANGLE PROJECTION

ASME Y14.100 AND Y14.5 APPLY, UNLESS OTHERWISE SPECIFIED DIMENSIONS ARE IN U.S. CUSTOMARY UNITS.

TOLERANCES UNLESS OTHERWISE SPECIFIED
FRACTIONS ± 1/16"

FINISH: N/A

UNIT OF MEASURE: N/A

OVERHEAD DOOR the original since 1921 DALLAS, TEXAS

MATERIAL: N/A

	NAME	DATE
DRAWN BY:	K. WOLFF	11/19/02
CHECKED BY:	JD FAW	1/24/03
APPROVED BY:	DM WELLS	1/24/03

DRAWING TITLE: WINDLOAD, 610/611, C-187, +50/-50 PSF (DESIGN)

DRAWING NUMBER: D- 308086

SCALE: N/A SHEET 1 OF 1