NOTES

1. DESIGNED AND TESTED IN ACCORDANCE WITH FLORIDA BLDG CODE AND INTERNATIONAL BLDG CODE. PROFESSIONAL ENGINEER'S SEAL PROVIDED ONLY FOR VERIFICATION OF WIND LOAD CONSTRUCTION DETAILS.
2. SPACING IS THE CENTER TO CENTER DIMENSION.
3. INDICATES SLAT FREQUENCY IN WHICH WINDLOCKS OCCUR.
4. WALL ANGLES MAY BE WELDED TO STEEL JAMBS. APPLY PLUG WELDS IN THE WALL ANGLE SLOTS THE THICKNESS OF THE ANGLE OR FILLET WELD AT THE HEEL AND TOE OF THE WALL ANGLE 2" LONG AT EACH SPECIFIED BOLT LOCATION TO HOLD THE LOADS LISTED IN THE GUIDE TABLE.
5. "E" GUIDE DOORS HAVE THREE WALL FASTENER LENGTHS, THEY ARE:
   - 3/8" DIA(GRADE 2) = 1" LONG WALL BOLT
   - 3/8" DIA(GRADE 5) = 1-1/2" LONG WALL BOLT
   - 1/2" DIA = 1-1/2" LONG WALL BOLT
6. ASTM-A36 GUIDE ANGLE MATERIAL.
7. DOORS AT 5'-6" WIDE WILL HAVE NO WINDBAR.
8. REFERENCE C-187 SLAT DRAWING 307225.
9. DOOR OPENINGS 15'-4" AND LESS USE 22GA SLATS
   DOOR OPENINGS OVER 15'-4" USE 20GA SLATS
10. THE ANCHOR USED TO ATTACH THE Z-GUIDE TO THE CONCRETE JAMB ARE FOR HILTI KBTZ2 (P/N 609420-XXXX) OR EQUIVALENT. THE JAMB MINIMUM STRENGTH AND THICKNESS TO SUPPORT THE ANCHOR MUST SATISFY THE TABLE:

ANCHOR DIAMETER	ANCHOR EMBEDMENT	CONCRETE STRENGTH	CONCRETE THICKNESS
3/8"	All	3000PSI MIN	6" MIN
1/2"	4" MIN	3000PSI MIN	7.5" MIN
1/2"	5" MIN	3000PSI MIN	9" MIN
5/8"	5-1/2" MIN	4000PSI MIN	9" MIN
5/8"	6" MIN	4000PSI MIN	12" MIN

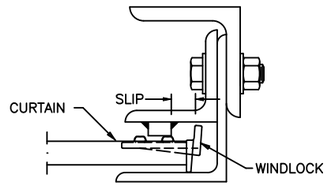

WINDLOCK/WINDBAR RELATIONSHIP DETAIL

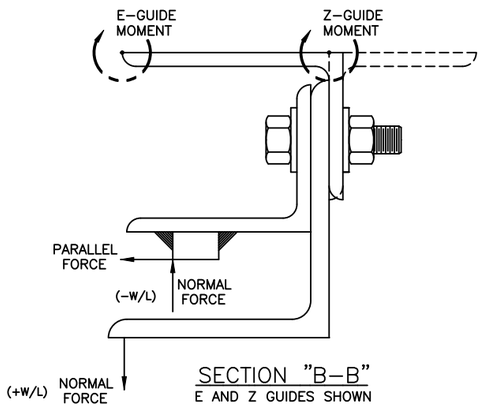

SECTION "B-B"
E AND Z GUIDES SHOWN

"E"-GUIDE

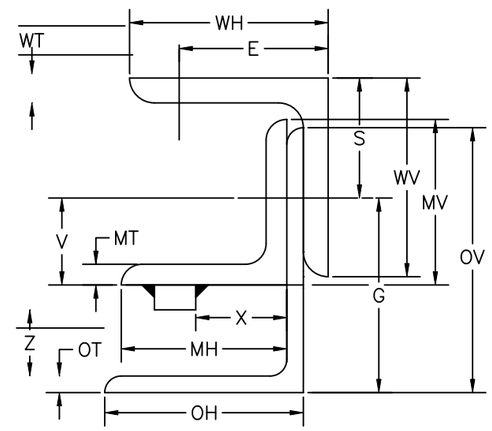

"Z"-GUIDE

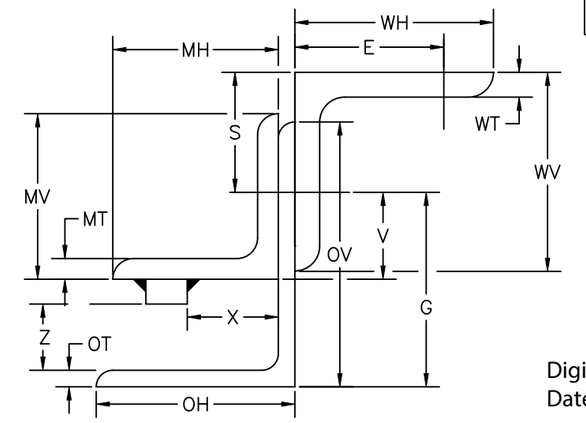

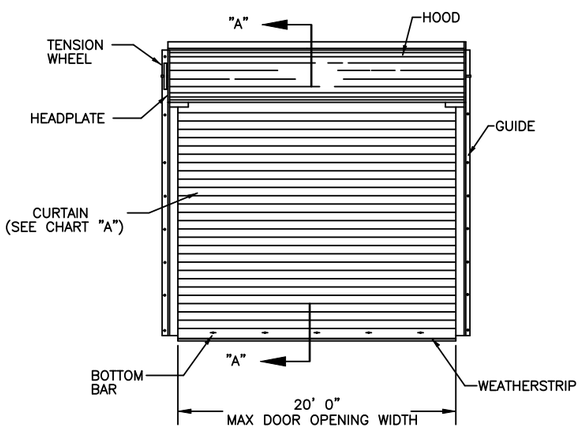

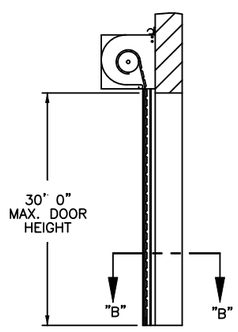

SECTION "A-A"

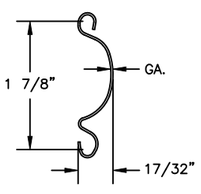

SLAT DETAIL

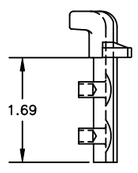

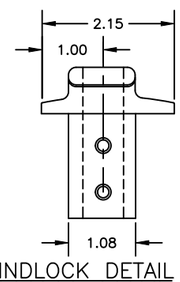

C-187 ALT. WINDLOCK DETAIL

		E-GUIDE								Z-GUIDE							NOTES
		WIND PRESSURE								WIND PRESSURE							
DOOR OPENING WIDTH		5'-6"	10'-3"	15'	20'	25'	30'	35'	40'	9'-6"	15'	20'	25'	30'	35'	40'	
WALL HORIZONTAL	WH	2-1/2	3	3-1/2	3-1/2	N/A				3	3-1/2	3-1/2	N/A				
WALL VERTICAL	WV	3	2	2-1/2	2-1/2					2	2-1/2	2-1/2					
WALL THICKNESS	WT	3/16	3/16	1/4	5/16					3/16	1/4	5/16					
MIDDLE HORIZONTAL	MH	2	2-1/2	3	3					2-1/2	3	3					
MIDDLE VERTICAL	MV	2	2	2	2					2	2	2					
MIDDLE THICKNESS	MT	3/16	3/16	3/16	1/4					3/16	3/16	1/4					
OUTSIDE HORIZONTAL	OH	2-1/2	3	3-1/2	3-1/2					3	3-1/2	3-1/2					
OUTSIDE VERTICAL	OV	3	3-1/2	3-1/2	3-1/2					3-1/2	3-1/2	3-1/2					
OUTSIDE THICKNESS	OT	3/16	1/4	1/4	1/4					1/4	1/4	1/4					
E	E	1-3/4	2-1/4	2-1/4	2-1/4					2-1/4	2-3/4	2-3/4					
S	S	2-1/4	1-3/16	1-3/4	1-3/4					1-3/16	1-3/4	1-3/4					
V	V	1-1/4	1-1/4	1-5/16	1-5/16					1-1/4	1-5/16	1-5/16					
G	G	2-1/4	2-11/16	2-3/4	2-3/4					2-11/16	2-3/4	2-3/4					
X	X	NONE	1-1/4	1-1/4	2-1/8					1-1/4	1-1/4	2-1/8					
Z	Z	NONE	13/16	13/16	13/16					13/16	13/16	13/16					
SLIP		NONE	1/2	5/8	1-1/2					1/2	5/8	1-1/2					
WALL BOLT SIZE		3/8	3/8	1/2	1/2					3/8	3/8	1/2					
WALL BOLT GRADE		2	2	2	5					N/A	N/A	N/A					6
WALL BOLT EMBED		N/A	N/A	N/A	N/A					2-1/2	3-1/2	4					12
WALL BOLT SPACING		36	18	16	18					16	12	12					2
ASSEMBLY BOLT SIZE		3/8	3/8	1/2	1/2					3/8	1/2	1/2					
ASSEMBLY BOLT GRADE		2	5	5	5					2	5	5					
ASSEMBLY BOLT SPACING		36	18	15	10					18	16	11					2
WINDLOCK FREQUENCY		0	2	2	2					2	2	2					3
MOMENT (IN*LBS/FT)		257	1814	4595	5369					1348	4527	5257					
NORMAL (LBS/FT)		99	185	270	360					171	270	360					
PARALLEL (LBS/FT)		0	493	1150	1215					350	1150	1215					

REVISIONS

EN/ER	REV	DESCRIPTION	DATE	APPROVAL
500149	H	REVISE PER ER	6/23/09	MS
500341	J	REVISE PER ER	2/17/10	MS
32728	K	REVISE PER PCR	10/19/22	DG

PRINTED COPIES OF THIS DOCUMENT ARE NOT CONSIDERED SIGNED AND SEALED AND THE SIGNATURE MUST BE VERIFIED ON ANY ELECTRONIC COPIES.

JOHN E. SCATES LICENSE No. 51737 STATE OF FLORIDA PROFESSIONAL ENGINEER

JOHN E. SCATES, PE
2560 KING ARTHUR BLVD, STE 124-54
LEWISVILLE, TX 75056
FL. PE 51737/TX PE 56308/F-2203

Digitally signed by John E Scates
Date: 2023.09.26 17:42:28 -05'00'

REF DWG	USED ON

THIRD ANGLE PROJECTION

ASME Y14.100 AND Y14.5 APPLY, UNLESS OTHERWISE SPECIFIED DIMENSIONS ARE IN U.S. CUSTOMARY UNITS.

TOLERANCES UNLESS OTHERWISE SPECIFIED: FRACTIONS ± 1/16"

FINISH: N/A

UNIT OF MEASURE: N/A

OVERHEAD DOOR the original since 1921 DALLAS, TEXAS

MATERIAL: N/A

	NAME	DATE
DRAWN BY:	K. WOLFF	11/19/02
CHECKED BY:	JD FAW	1/24/03
APPROVED BY:	DM WELLS	1/24/03

DRAWING TITLE: WINDLOAD, 610/611, C-187, +36/-36 PSF (DESIGN)

DRAWING NUMBER: D- 308084

SCALE: N/A SHEET 1 OF 1