EVALUATION REPORT OF
ACI BUILDING SYSTEMS, LLC'S
'FW-120 PANEL'

FLORIDA BUILDING CODE 8TH EDITION (2023)
FLORIDA PRODUCT APPROVAL
FL 7395.1-R8
PANEL WALLS
SIDING

Prepared For:
ACI Building Systems, LLC
10125 Highway 6 West
PO Box 1316
Batesville, MS 38606
Telephone: (662) 563 4574

Prepared By:
Bala Sockalingam, Ph.D., P.E.
Florida Professional Engineer #62240
1216 N Lansing Ave., Suite C
Tulsa, OK 74106
Telephone: (918) 492-5992

This report consists of
Evaluation Report (2 Pages including cover)
Installation Details (1 Page)
Load Span Table (1 Page)

Report No. C2685-1
Date: 8.31.2023

BALA SOCKALINGAM
LICENSE
No. 62240
STATE OF
FLORIDA
PROFESSIONAL ENGINEER

This item has been digitally signed and sealed by Bala Sockalingam, PE, on the date indicated.

Printed copies of this document are not considered signed and sealed and this signature must be verified on any electronic copies.

2023.08.31
17:02:58 -05'00'

Manufacturer:	ACI Building Systems, LLC
Product Name:	FW-120
Panel Description:	12" wide coverage with 1.5" tall, inverted ribs
Materials:	Min 24 ga. with galvalume coated steel (ASTM A792) or painted steel (ASTM A755) (F_y = 50 ksi) as per FBC 2023 Section 1405.2.
Support Description:	Min. 16 ga., min 50 ksi steel section. (Must be designed by others)
Design Pressure:	Panels installed with panel and sidelap fasteners. Factor of Safety = 2. +39.9 and -33.5 psf at support spacing of 72" o.c. for 24 ga. panel +120.0 and -97.9 psf at support spacing of 24" o.c. for 24 ga. panel +39.9 and -42.3 psf at support spacing of 72" o.c. for 22 ga. panel +120.0 and -103.5 psf at support spacing of 24" o.c. for 22 ga. panel
Panel Fastening:	#12-14 x 1" long corrosion resistant self-drilling screw at each support.
Sidelap Fastening:	In addition to panel fastening, the panel sidelaps were fastened with (1) 1/4"-14 x 7/8" long corrosion resistant self-drilling screw with washer at each support.
Test Standards:	Wall assembly tested in accordance with ASTM E1592-05(2017) 'Test Method for Structural Performance of Sheet Metal Roof and Siding Systems by Uniform Static Air Pressure Difference'.
Code Compliance:	The product described herein has demonstrated compliance with FBC 2023 Section 1404.5.
Product Limitations:	Design wind loads shall be determined for each project in accordance with FBC 2023 Section 1609 or ASCE 7-22 using allowable stress design. The maximum support spacing listed herein shall not be exceeded. The design pressure for reduced support spacing may be computed using rational analysis prepared by a Florida Professional Engineer or based on ACI Building Systems' load span table. This evaluation report is not applicable in High Velocity Hurricane Zone.
Supporting Documents:	ASTM E1592 Test Report ENCON Technology Inc. Project No. C2579-1, Reporting Date 2/13/2023 (ACI Building Systems is authorized to use Associated Steel Group's Test Report)

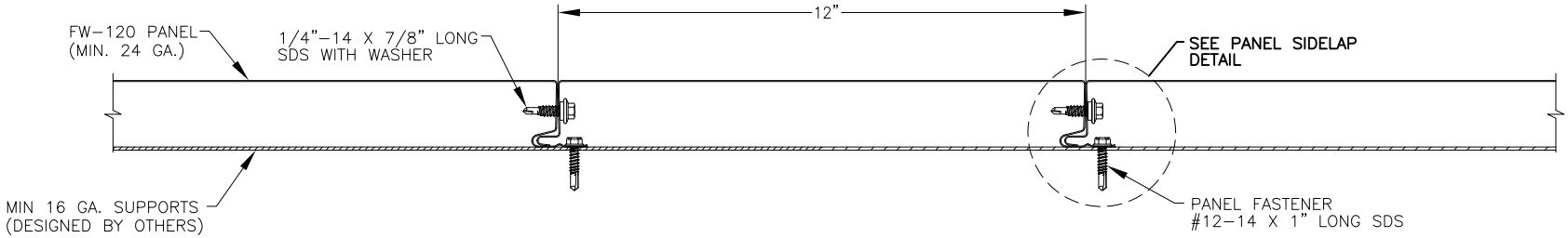

TYPICAL PANEL INSTALLATION X-SECTION

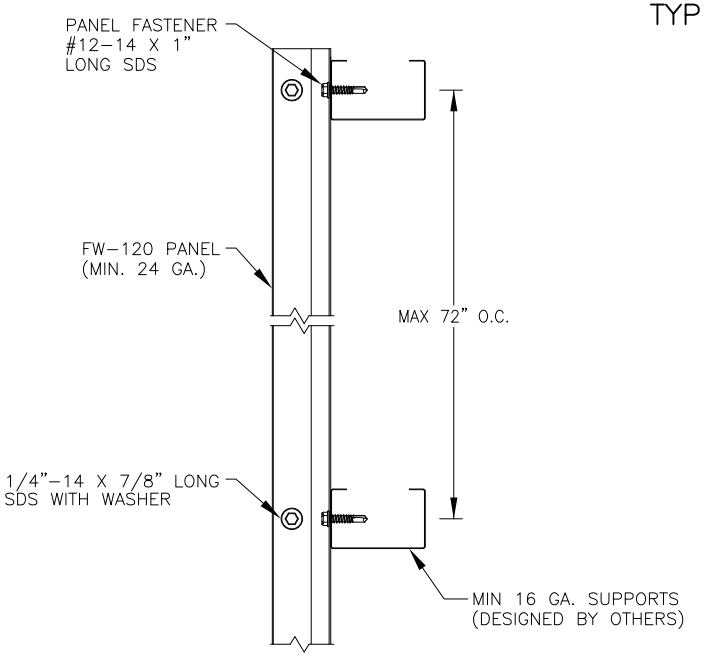

SECTION VIEW

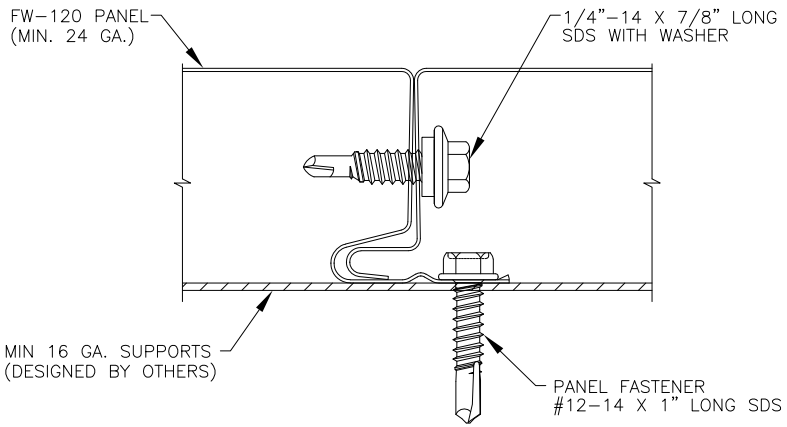

PANEL SIDELAP

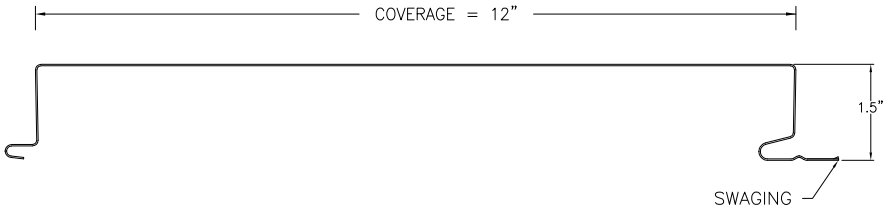

FW-120 PANEL PROFILE

24 & 22 Ga., Minimum Yield = 50 KSI

GENERAL NOTES:

1. WALL PANEL HAS BEEN DESIGNED IN ACCORDANCE WITH THE FLORIDA BUILDING CODE (FBC).
2. WALL PANELS SHALL BE 24 GA. (t = 0.022") OR 22 GA. (t = 0.028"). EFFECTIVE COVERING WIDTH OF PANEL = 12".
3. THE WALL PANELS SHALL BE INSTALLED OVER STRUCTURE AS SPECIFIED ON THIS DRAWING.
4. REQUIRED DESIGN WIND LOADS SHALL BE DETERMINED FOR EACH PROJECT. THIS PANEL SYSTEM MAY NOT BE INSTALLED WHEN THE REQUIRED DESIGN WIND LOADS ARE GREATER THAN THE ALLOWABLE DESIGN LOADS.
5. ALL FASTENERS MUST BE IN ACCORDANCE WITH THIS DRAWING & THE FLORIDA BUILDING CODE. IF A DIFFERENCE OCCURS BETWEEN THE MINIMUM REQUIREMENTS OF THIS DRAWING & THE CODE, THE CODE SHALL CONTROL.
6. SUPPORTS MUST BE DESIGNED TO WITHSTAND WIND LOADS AS REQUIRED REQUIRED FOR EACH APPLICATION AND ARE THE RESPONSIBILITY OF OTHERS.
7. PANELS MAY SPAN BETWEEN BOTTOM AND TOP SUPPORTS (WALL APPLICATION WITH PANELS ORIENTED VERTICALLY), SIDE TO SIDE BETWEEN CORNER SUPPORTS (WALL APPLICATION WITH PANELS ORIENTED HORIZONTALLY) OR UNDER ROOF (SOFFIT APPLICATION WITH PAINTED SURFACE FACING DOWNWARD).

DRAWN BY: B.S.	CHECKED BY: K.S.
PLOT:	DATE: 4/7/23

NO.	REVISION DESCRIPTION	BY	DATE

DRAWING TITLE: FW-120 PANEL

MANUFACTURER: ACI BUILDING SYSTEMS, LLC
10125 HIGHWAY 6 WEST
BATESVILLE, MS 38606
662 563 4574

CONSULTANTS
BALA SOCKALINGAM, PH.D., P.E.
1216 N LANSING AVE, SUITE C
TULSA, OK 74106
PHONE: 918-492-5992 FAX: 866-366-1543

DRAWING NO. 2685-1 REV.

SHEET NO. 1 OF 1

ACI BUILDING SYSTEMS, LLC
FW-120 Panel
Allowable Inward and Outward Loads

Fastener Spacing along Length (in)	Allowable Inward Load (psf)	Allowable Outward Loads (psf)	
	Minimum 24 ga.	With Sidelap Fastener	
		24 ga.	22 ga.
24	**120.0**	**97.9**	**103.5**
27	106.7	89.4	99.7
30	96.0	80.5	95.8
33	87.3	73.2	92.0
36	80.0	67.1	84.6
39	73.8	61.9	78.1
42	68.6	57.5	72.5
45	64.0	53.7	67.7
48	60.0	50.3	63.4
51	56.5	47.4	59.7
54	53.3	44.7	56.4
57	50.5	42.4	53.4
60	48.0	40.2	50.7
63	45.7	38.3	48.3
66	43.6	36.6	46.1
69	41.7	35.0	44.1
72	**39.9**	**33.5**	**42.3**

Notes:
1. The bold numbers indicate allowable loads calculated from test data with safety factor of 2.
2. The coverage width is 12".
3. The panels are fastened to min. 16 ga. supports with #12-14 SDS with 1/4"-14 Stitch screws through sidelap at each support.
4. Panels must be installed as per Evaluation Report FL 7395.1 and ACI Building Systems current installation procedure.
5. Two or more spans condition.
6. The structural capacity of support beams are not considered and must be examined independently.
7. Minimum support thickness is 16 ga.

1216 N Lansing Ave., Suite C
Tulsa, Ok 74106
918 492 5992

Bala Sockalingam, Ph.D., P.E.
FL 62240