Evaluation Report

"175 SL"

Metal Roof Assembly

Manufacturer:

Streamline Roofing & Construction, Inc.

3654 W. Orange Ave.

Tallahassee, Florida 32310

(850) 575-1168

for

Florida Product Approval

FL 7207.7 R6

Florida Building Code 8th Edition (2023)

Method: 1 - D

Category: Roofing

Sub - Category: Metal Roofing

Product: "175 SL"
Material: Copper
Support: Wood Deck

Prepared by:
James L. Buckner, P.E., S.E.C.B.
Florida Professional Engineer # 31242
Florida Evaluation ANE ID: 1916
Project Manager: Diana Galloway
Report No. 23-625-175SL-CW-ER
(Revises 20-228-175SL-CW-ER, FL7207.7 R5)
Date: 10/17/2023

This item has been digitally signed and sealed by James L. Buckner, P.E., on this date below. Printed copies of this document are not considered signed and sealed, and the signature must be verified on any electronic copies.

JAMES L. BUCKNER
LICENSE
No 31242
STATE OF FLORIDA
PROFESSIONAL ENGINEER

James L. Buckner, P.E.
FL31242
Date: 2023.10.17
'11:05:47 -04'00

Contents:

Evaluation Report Pages 1 – 8

Manufacturer:

Streamline Roofing
3654 W. Orange Ave.
Tallahassee, Florida 32310
(850) 575-1168
http://www.streamlineroofing.com/

Product Name: **"175 SL"**

Product Category: Roofing

Product Sub-Category Metal Roofing

Compliance Method: State Product Approval Rule 61G20-3.005 (1) (d)

Product/System Description:

"175 SL"
Copper roof panel mechanically attached to Wood Deck with screws.

Product Assembly as Evaluated:

Refer to Page 4 of this report for product assembly components/materials & standards:

1. Roof Panel
2. Fasteners
3. Underlayment
4. Insulation (Optional)
5. Bearing Plate (Optional)

Support:

Type:
Wood Deck
(Design of support and its attachment to support framing is outside the scope of this evaluation.)

Description:
- 15/32" or greater plywood,
- or Wood plank (min. specific gravity of 0.42)

Slope:

Minimum slope shall be in compliance with FBC Chapter 15 based on the type of roof covering, applicable code sections and in accordance with manufacturer's recommendations.

Performance:

Wind Uplift Resistance:
- Design Uplift Pressure: **Refer To Table "A"**
  (Refer to "Table A" attachment details herein)

Performance Standards: The product described herein has demonstrated compliance with:

- UL580-06 – *Test for Uplift Resistance of Roof Assemblies*

Standards Equivalency: The UL580-94 standard version used to test the product meets the prescribed standards in UL580-06 standard version adopted by the Florida Building Code 8th Edition (2023) for use as evaluated in this report.

Code Compliance: The product described herein has demonstrated compliance with Florida Building Code 8th Edition (2023).

Evaluation Report Scope: This product evaluation is limited to compliance with the structural requirements of the Florida Building Code, as related to the scope section to Florida Product Approval Rule 61G20-3.001.

Limitations and Conditions of Use:

- Scope of "Limitations and Conditions of Use" for this evaluation:
  This evaluation report for "Optional Statewide Approval" contains technical documentation, specifications and installation method(s) which include "Limitations and Conditions of Use" throughout the report in accordance with Rule 61G20-3.005. Per Rule 61G20-3.004, the Florida Building Commission is the authority to approve products under "Optional Statewide Approval".
- Option for application outside "Limitations and Conditions of Use"
  Rule 61G20-3.005(1)(e) allows engineering analysis for "project specific approval by the local authorities having jurisdiction in accordance with the alternate methods and materials authorized in the Code". Any modification of the product as evaluated in this report and approved by the Florida Building Commission is outside the scope of this evaluation and will be the responsibility of others.
- This report is a building code product evaluation per FLPE rule (FAC) 61G15-36 to comply with Florida product approval rule (FAC) 61G20-3. This evaluation report is part of the Florida Building Commission approval for the listed code related criteria. This report by James Buckner, P.E. and CBUCK Engineering is not a design certification of code compliance construction submittal documentation, per FBC section 107, for any individual structure, site specific or permit design.
- All metal components and fasteners shall be corrosion resistant in accordance with applicable sections of FBC, including but limited to Sections 1504.3.2, 1506.6 and 1507.4.4.
- Design of support system is outside the scope of this report.
- Fire Classification is outside the scope of Rule 61G20-3, and is therefore not included in this evaluation.
- This evaluation report does not evaluate the use of this product for use in the High Velocity Hurricane Zone code section. (Dade & Broward Counties)

Quality Assurance: The manufacturer has demonstrated compliance of roof panel products in accordance with the Florida Building Code and Rule 61G20-3.0005 (3) for manufacturing under a quality assurance program audited by an approved quality assurance entity through UL, LLC (FBC Organization #: QUA 9625).

Components/Materials (by Manufacturer):

Roof Panel: "175 SL"

Material:	Copper
Thickness:	16 oz/sqft. (min.)
Panel Width(s):	16" (max.) Coverage
Rib Height:	1-3/4"
Hardness:	eighth-hard copper (min.)
Corrosion Resistance:	In compliance with FBC Section 1507.4.3

Roof Panel Clips:

Type:	One-piece, fixed clip
Material:	Stainless Steel
Thickness:	18 gauge
Yield Strength:	40 ksi min.
Dimensions:	1-7/8" (tall) x 3-3/4" (long) x 1-3/8" (horizontal leg)
Corrosion Resistance:	Per FBC Section 1506.7

Fastener:

Type:	Pancake-Head Wood Screws
Material:	Stainless Steel
Size :	#10 -16 x 1"
Corrosion Resistance:	Per FBC Section 1506.6 and 1507.4.4
Standard:	Per FBC 1507.4.4 and ANSI/ASME B18.6.1

Underlayment:

Material and application shall be in compliance with FBC Section 1507.1.1 and in accordance with applicable code sections and manufacturer's recommendations.

Components/Materials (by Others):

Insulation (Optional):

Type:	Rigid Insulation Board
Thickness:	3" (max.)
Properties:	
Density:	2.25 pcf (lbs/ft^3) min.
Or Compressive Strength:	20 psi min.

Bearing Plate (Optional with Insulation)

Material:	Stainless Steel
Thickness:	18 gauge min.
Yield Strength:	40 ksi min.
Dimensions:	4-1/2" x 6" min.
Corrosion Resistance:	Per FBC Section 1506.7

Insulation shall comply with FBC Section 1508. When insulation is incorporated, fastener length shall conform to penetrate thru bottom of support a minimum of 3/16".

Installation:

Installation Method:
(Refer to drawings at the end of this report.)

- Clip spacing: **Refer to Table "A" Below**
  (along the length of the panel)
- Rib Interlock: Snap Lock
  (Panel ribs shall be fully engaged to form an integral interlock.)
- Minimum fastener penetration thru bottom of support, 3/16".
- For panel construction at the end of panels, refer to manufacturer's instructions and any site specific design.

TABLE "A"	
	METHOD 1:
Design Pressure*:	**- 52.5 PSF**
Clip Spacing:	24"
# Fasteners per Clip:	2
** Allowable design pressure(s) for allowable stress design (ASD).*	

Install the "175 SL" roof panel assembly in compliance with the installation method listed in this report and applicable code sections of FBC 8th Edition (2023). The installation method described herein is in accordance with the scope of this evaluation report. Refer to manufacturer's installation instructions as a supplemental guide for attachment.

Referenced Data:

1. Uplift Class 90 Based on UL580-94
   By Underwriters Laboratories, Inc.
   Construction No. , TGKX.614 (FBC Organization #CER ID: 1739)
2. Quality Assurance
   By UL, LLC (FBC Organization #: QUA 9625).
3. Engineering Analysis
   By CBUCK Engineering
4. Equivalency of Test Standard Certification
   By James L. Buckner, P.E. @ CBUCK Engineering
   (FBC Organization # ANE 1916)
5. Certification of Independence
   By James L. Buckner, P.E. @ CBUCK Engineering
   (FBC Organization # ANE 1916)

Installation Method
Streamline Roofing
"175 SL" Copper Roof Panel Attached to Wood Deck

Profile Drawings

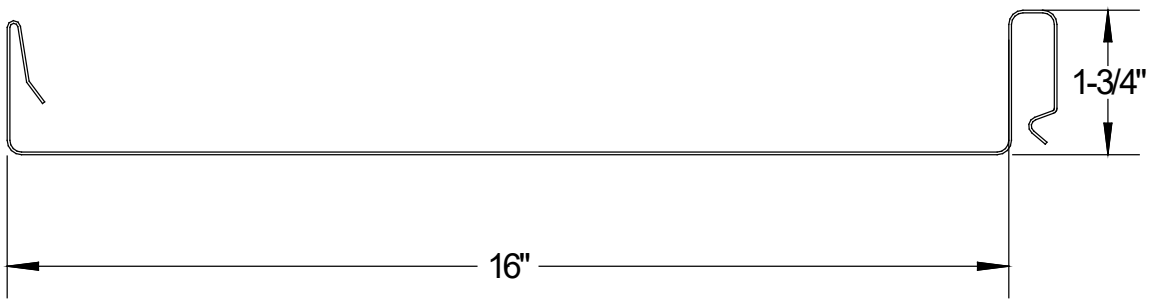

Typical Panel Profile View

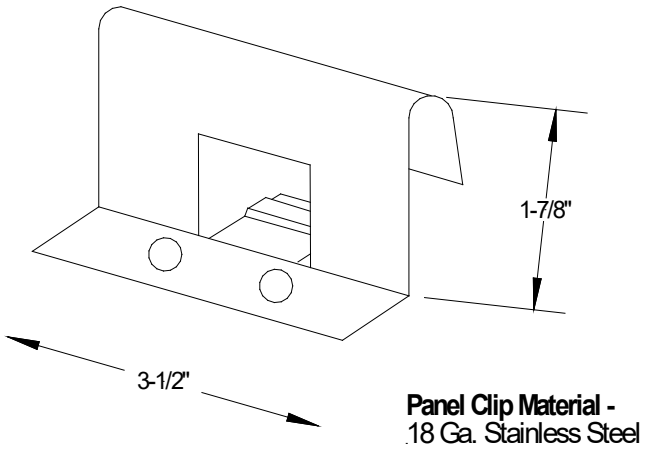

Typical Panel Clip Profile

Installation Method
Streamline Roofing
"175 SL" Copper Roof Panel Attached to Wood Deck

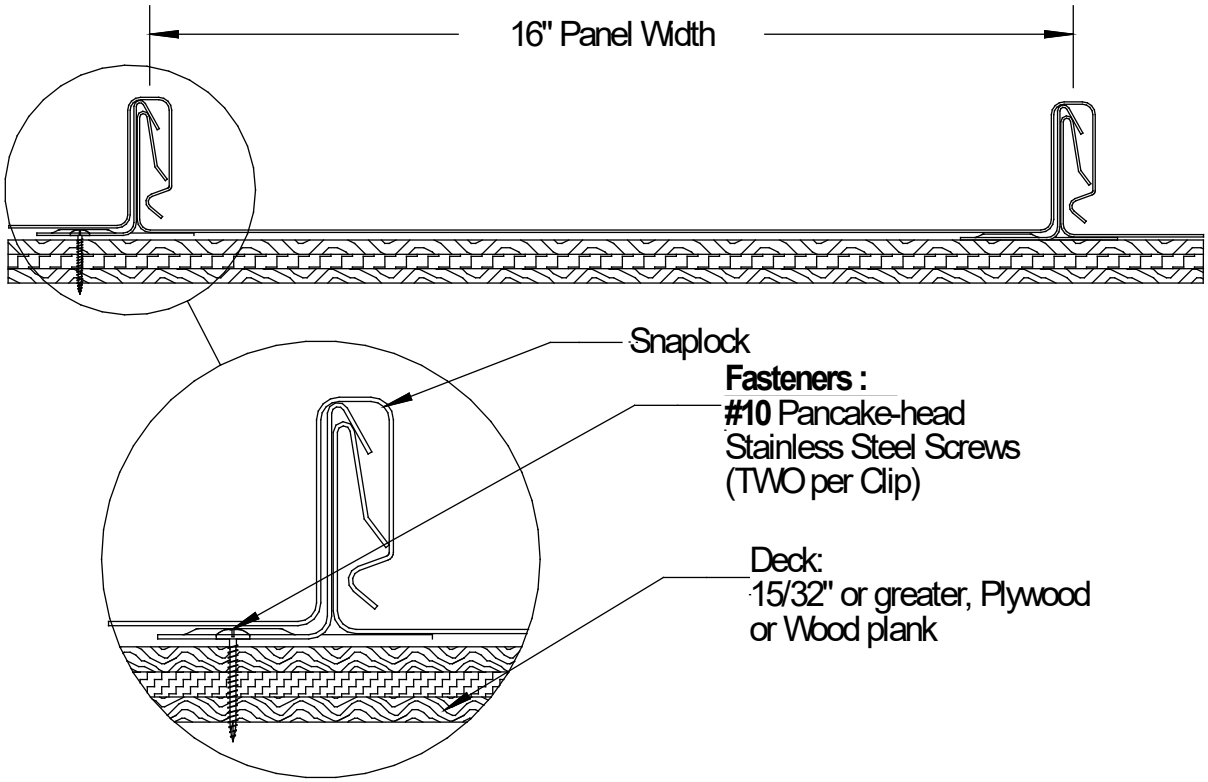

Typical Assembly Profile View

Installation Method
Streamline Roofing
"175 SL" Copper Roof Panel Attached to Wood Deck

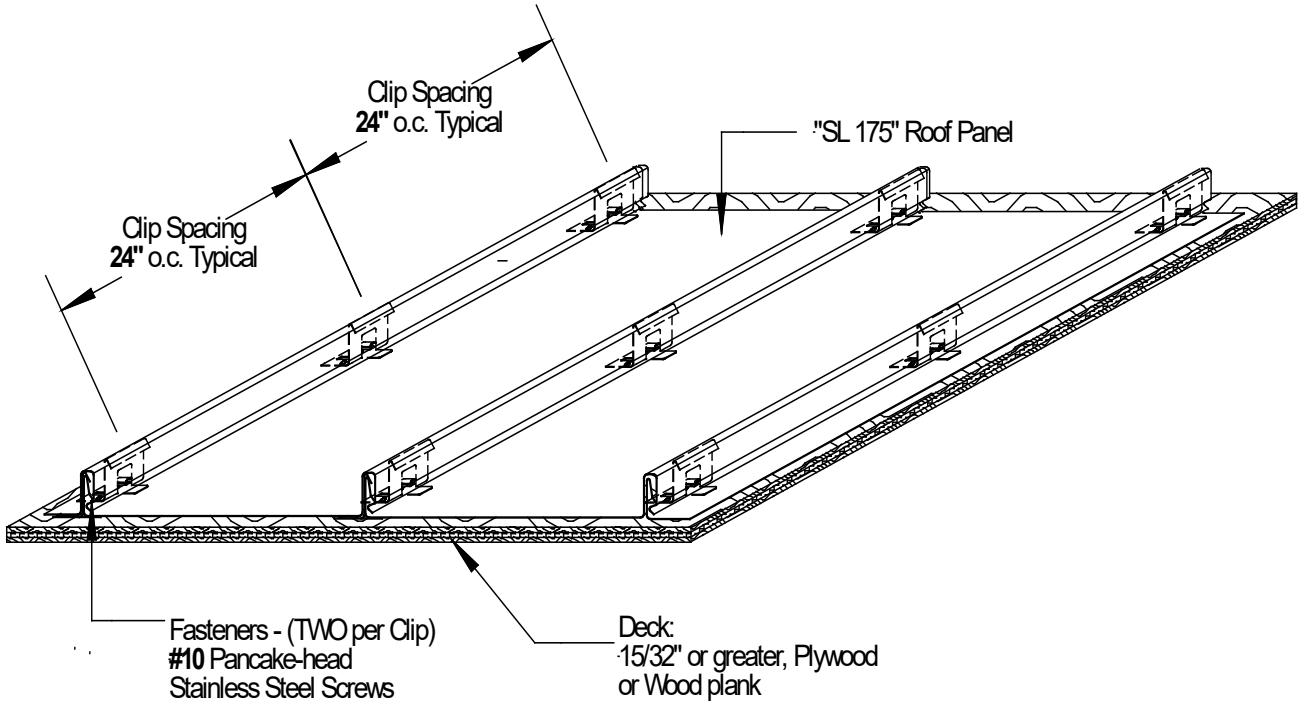

Typical Assembly Profile View

TABLE "A"	
	METHOD 1:
Design Pressure:	**- 52.5 PSF**
Clip Spacing:	24"
# Fasteners per Clip:	2