SILVER LINE WINDOWS AND DOORS

SERIES 7537 STRUCTURAL BEAM MULLION (IMPACT)

GENERAL NOTES:

1. THE PRODUCT SHOWN HEREIN IS DESIGNED AND MANUFACTURED TO COMPLY WITH THE CURRENT FLORIDA BUILDING CODE (FBC), **EXCLUDING** HVHZ AND HAS BEEN EVALUATED ACCORDING TO THE FOLLOWING:
   TAS 202-94
   ASTM E330-14
2. ADEQUACY OF THE EXISTING STRUCTURAL CONCRETE/MASONRY AND 2X FRAMING AS A MAIN WIND FORCE RESISTING SYSTEM CAPABLE OF WITHSTANDING AND TRANSFERRING APPLIED PRODUCT LOADS TO THE FOUNDATION IS THE RESPONSIBILITY OF THE ENGINEER OR ARCHITECT OF RECORD FOR THE PROJECT OF INSTALLATION.
3. 1X AND 2X BUCKS (WHEN USED) SHALL BE DESIGNED AND ANCHORED TO PROPERLY TRANSFER ALL LOADS TO THE STRUCTURE. BUCK DESIGN AND INSTALLATION IS THE RESPONSIBILITY OF THE ENGINEER OR ARCHITECT OF RECORD FOR THE PROJECT OF INSTALLATION.
4. THE INSTALLATION DETAILS DESCRIBED HEREIN ARE GENERIC AND MAY NOT REFLECT ACTUAL CONDITIONS FOR A SPECIFIC SITE. IF SITE CONDITIONS CAUSE INSTALLATION TO DEVIATE FROM THE REQUIREMENTS DETAILED HEREIN, A LICENSED ENGINEER OR ARCHITECT SHALL PREPARE SITE SPECIFIC DOCUMENTS FOR USE WITH THIS DOCUMENT IN NON-HVHZ AREAS. IN HVHZ AREAS, ONE TIME PRODUCT APPROVAL TO BE OBTAINED FROM MIAMI-DADE PERA.
5. MULLION & CLIP MATERIAL: ALUMINUM 6005-T5 & 6063-T6 (AS NOTED)
6. WHEN USED IN AREAS REQUIRING WIND BORNE DEBRIS PROTECTION THIS PRODUCT COMPLIES WITH CHAPTER 16 OF THE CURRENT FLORIDA BUILDING CODE AND DOES NOT REQUIRE AN IMPACT RESISTANT COVERING IN AREAS WZ3 OR LESS
7. WHEN USED IN AREAS REQUIRING WIND BORNE DEBRIS PROTECTION THIS PRODUCT COMPLIES WITH CHAPTER 16 OF THE CURRENT FLORIDA BUILDING CODE AND DOES REQUIRE AN IMPACT RESISTANT COVERING IN AREAS WZ4.
8. MULLIONS MAY BE USED WITH ANY APPROVED FENESTRATION PRODUCT, UNDER SEPARATE APPROVAL.
9. SEE SHEETS 5-96FOR INSTALLATION ANCHOR REQUIREMENTS FOR SPECIFIC ANCHORING REQUIREMENTS, MULLION CONFIGURATIONS, AND DESIGN LOAD CAPACITIES.
10. IN ACCORDANCE WITH THE CURRENT FBC CH20 DISSIMILAR METALS INCLUDING FASTENERS THAT MAY COME INTO CONTACT WITH ALUMINUM UNIT FRAMING SHALL BE PROTECTED.

TABLE OF CONTENTS

SHEET	REVISION	SHEET DESCRIPTION
1	C	GENERAL, INSTALLATION NOTES AND TYPICAL ELEVATIONS
2	C	MULLION CROSS SECTIONS
3	C	ANCHOR CLIP CONFIGURATIONS
4	C	VERTICAL SECTIONS AND ANCHOR SCHEDULE
5	C	ANCHOR LOAD TABLES FOR ONE-WAY MULLION
6	C	ANCHOR LOAD TABLES FOR TWO-WAY MULLION

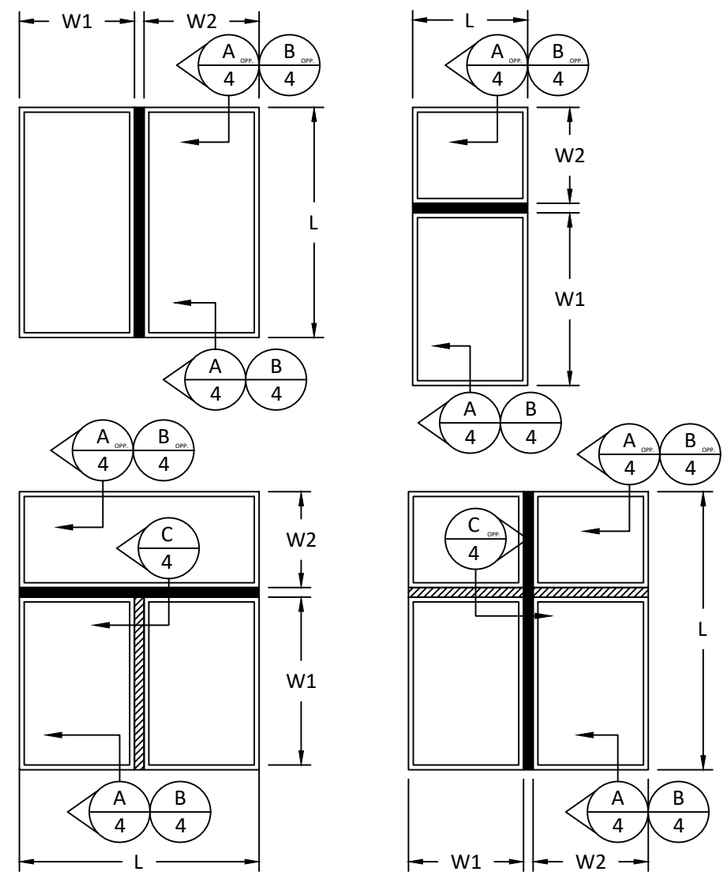

TYPICAL ELEVATIONS

INSTRUCTIONS:

1. DETERMINE REQUIRED DESIGN PRESSURE FOR OPENING.
2. CHOOSE A MULLION THAT PROPERLY FITS THE FENESTRATION PRODUCT.
3. DETERMINE WHETHER ASSEMBLY REQUIRES ONE-WAY OR TWO-WAY MULLIONS:
   - ASSEMBLIES CONSISTING OF STACKED OR SIDE-BY-SIDE UNITS REQUIRE USE OF ONE-WAY MULLIONS.
   - ASSEMBLIES CONSISTING OF MULTIPLE UNITS MULLED TOGETHER WITH MULTIPLE MULLIONS REQUIRE USE OF TWO-WAY MULLIONS.
4. VERIFY THAT MULLION DESIGN PRESSURE MEETS OR EXCEEDS REQUIRED DESIGN PRESSURE OF OPENING USING CHARTS ON SHEETS 6-10.
5. QUALIFIED CLIP TYPES APPEAR ON SHEETS 3 & 4. MULTIPLE ANCHOR TYPE/SUBSTRATE/CLIP COMBINATIONS WITHIN AN OPENING ARE ALLOWED.
6. THE LESSER DESIGN PRESSURE OR MULLION OR FENESTRATION PRODUCT WILL GOVERN OVERALL ASSEMBLY DESIGN PRESSURE RATING.

AMERICAN CRAFTSMAN WINDOWS
PLY GEM WINDOWS
SILVER LINE WINDOWS AND DOORS

ONE SILVERLINE DRIVE
NORTH BRUNSWICK, NJ 08902
PH: (888) 741-0354

TITLE: *SERIES 7537 STRUCTURAL BEAM MULLION*
GENERAL AND INSTALLATION NOTES

PREPARED BY: BUILDING DROPS, INC.
1900 NE Miami Ct. Units 2-15
Miami, FL 33132
PH: (954)399-8478
FAX: (954)744.4738
WEB: www.buildingdrops.com

REMARKS	BY	DATE
6TH FBC EDITION	AG	10/17
7TH FBC EDITION	LH	10/20
8th FBC EDITION	LH	09/23
CURRENT FBC	LH	01/25

THE INSTALLATION DETAILS DESCRIBED HEREIN ARE GENERIC AND MAY NOT REFLECT ACTUAL CONDITIONS FOR A SPECIFIC SITE. IF SITE CONDITIONS CAUSE INSTALLATION TO DEVIATE FROM THE REQUIREMENTS DETAILED HEREIN, A LICENSED ENGINEER OR ARCHITECT SHALL PREPARE SITE SPECIFIC DOCUMENTS FOR USE WITH THIS DOCUMENT.

Digitally signed by Hermes F. Norero, P.E.
Reason: I am approving this document
Date: 2025.01.23 13:10:08 +03'00'

HERMES F. NORERO
LICENSE
No. 73778
STATE OF FLORIDA
PROFESSIONAL ENGINEER

HERMES F. NORERO, P.E.
FLORIDA PE LICENSE No. 73778
BUILDING DROPS, INC
1900 NE MIAMI CT. UNITS 2-15
MIAMI, FL 33132
FBPE CERT. OF AUTHORIZATION No. 29578

FL #: FL 6067

DATE: 10.06.17

DWG. BY: AG | CHK. BY: HFN

SCALE: NTS

DWG. #: SWD016

SHEET 1 OF 6

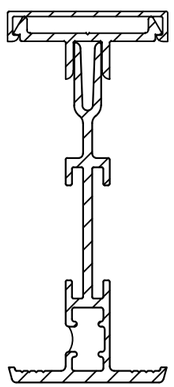

SERIES 7537 (3-PIECE)
(ASSEMBLED VIEW)

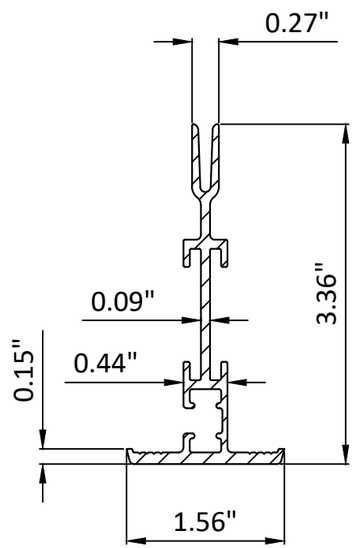

SERIES 7537 MULLION (MALE)
(6063-T6 ALUM)

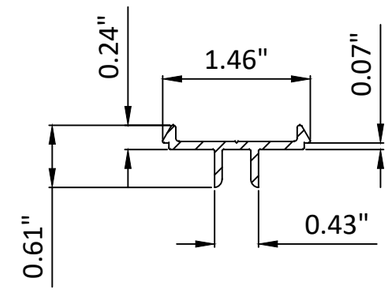

SERIES 7537 MULLION (FEMALE)
(6063-T6 ALUM)

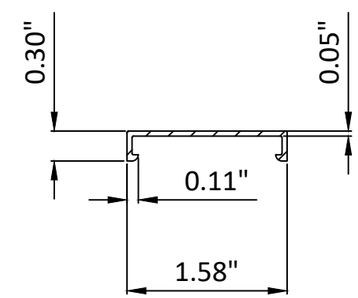

SERIES 7537 MULLION (CAP)
(6063-T6 ALUM)

NOTE: SEE SHEET 3 FOR SPECIFIC CLIP TYPES AND DIMENSIONS.

AMERICAN CRAFTSMAN WINDOWS
PLY GEM WINDOWS
SILVER LINE WINDOWS AND DOORS

ONE SILVERLINE DRIVE
NORTH BRUNSWICK, NJ 08902
PH: (888) 741-0354

TITLE: *SERIES 7537 STRUCTURAL BEAM MULLION*
MULLION CROSS SECTIONS

PREPARED BY:
BUILDING DROPS, INC.
1900 NE Miami Ct. Units 2-15
Miami, FL 33132
PH: (954)399-8478
FAX: (954)744.4738
WEB: www.buildingdrops.com

REMARKS	BY	DATE
6TH FBC EDITION	AG	10/17
7TH FBC EDITION	LH	10/20
8th FBC EDITION	LH	09/23
CURRENT FBC	LH	01/25

THE INSTALLATION DETAILS DESCRIBED HEREIN ARE GENERIC AND MAY NOT REFLECT ACTUAL CONDITIONS FOR A SPECIFIC SITE. IF SITE CONDITIONS CAUSE INSTALLATION TO DEVIATE FROM THE REQUIREMENTS DETAILED HEREIN, A LICENSED ENGINEER OR ARCHITECT SHALL PREPARE SITE SPECIFIC DOCUMENTS FOR USE WITH THIS DOCUMENT.

HERMES F. NORERO
LICENSE
No. 73778
STATE OF
FLORIDA
PROFESSIONAL ENGINEER

HERMES F. NORERO, P.E.
FLORIDA P.E. No. 73778
BUILDING DROPS, INC
1900 NE MIAMI CT. UNITS 2–15
MIAMI, FL 33132
FBPE CERT. OF AUTHORIZATION No. 29578

FL #: FL 6067

DATE: 10.06.17

DWG. BY: AG | CHK. BY: HFN

SCALE: NTS

DWG. #: SWD016

SHEET 2 OF 6

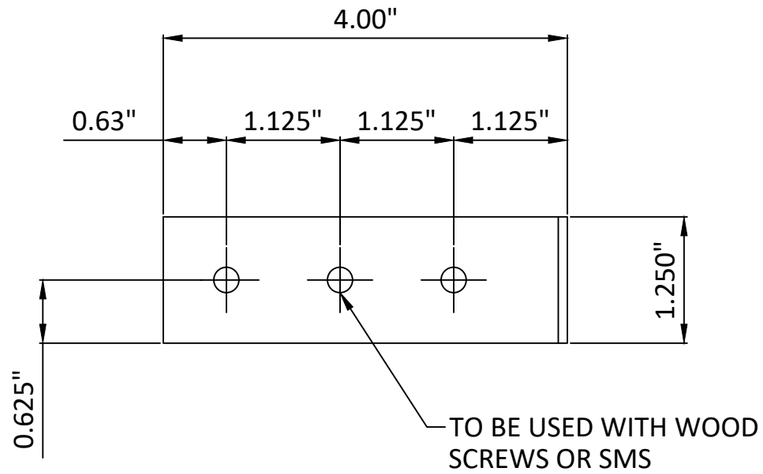

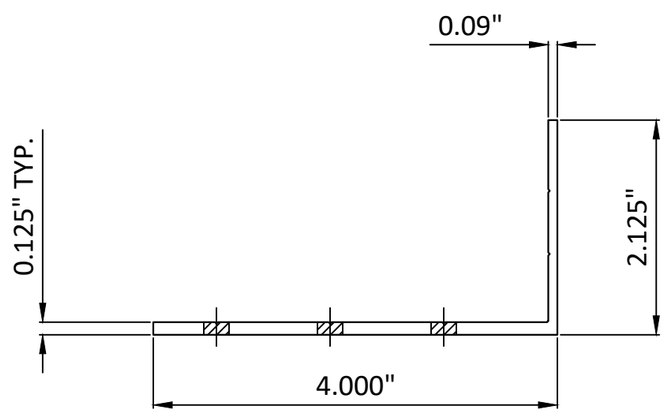

MULLION ANCHOR BRACKET

ALUMINUM (6063-T6)

AMERICAN CRAFTSMAN WINDOWS
PLY GEM WINDOWS
SILVER LINE WINDOWS AND DOORS

ONE SILVERLINE DRIVE
NORTH BRUNSWICK, NJ 08902
PH: (888) 741-0354

TITLE: *SERIES 7537*
STRUCTURAL BEAM MULLION
ANCHOR CLIP CONFIGURATIONS

PREPARED BY:
BUILDING DROPS, INC.
1900 NE Miami Ct. Units 2-15
Miami, FL 33132
PH: (954)399-8478
FAX: (954)744.4738
WEB: www.buildingdrops.com

REMARKS	BY	DATE
6TH FBC EDITION	AG	10/17
7TH FBC EDITION	LH	10/20
8th FBC EDITION	LH	09/23
CURRENT FBC	LH	01/25

THE INSTALLATION DETAILS DESCRIBED HEREIN ARE GENERIC AND MAY NOT REFLECT ACTUAL CONDITIONS FOR A SPECIFIC SITE. IF SITE CONDITIONS CAUSE INSTALLATION TO DEVIATE FROM THE REQUIREMENTS DETAILED HEREIN, A LICENSED ENGINEER OR ARCHITECT SHALL PREPARE SITE SPECIFIC DOCUMENTS FOR USE WITH THIS DOCUMENT.

HERMES F. NORERO
LICENSE
No. 73778
STATE OF
FLORIDA
PROFESSIONAL ENGINEER

HERMES F. NORERO, P.E.
FLORIDA PE LIC. No. 73778
BUILDING DROPS, INC
1900 NE MIAMI CT. UNITS 2-15
MIAMI, FL 33132
FBPE CERT. OF AUTHORIZATION No. 29578

FL #: FL 6067

DATE: 10.06.17

DWG. BY: AG

CHK. BY: HFN

SCALE: NTS

DWG. #: SWD016

SHEET 3 OF 6

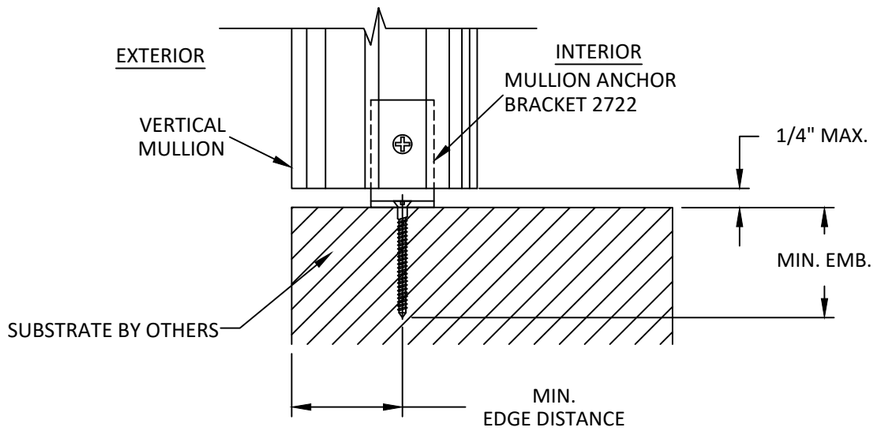

A/4 ANCHOR DETAIL

MULLION ANCHOR BRACKET 2722

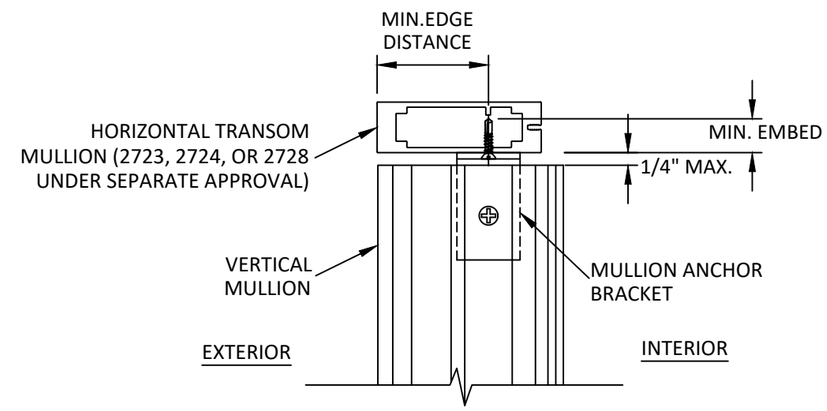

B/4 VERTICAL SECTION

ALUMINUM MULLION
SIDE VIEW-VERTICAL

ANCHOR SCHEDULE					
INSTALLATION TYPE	SUBSTRATE	SCREW QTY PER LOCATION	ANCHOR TYPE	EMBEDMENT (IN.)	MIN. EDGE DISTANCE (IN.)
ANCHOR BRACKET	WOOD	8	#14 WOOD ANCHOR	1.5	0.75
ANCHOR BRACKET	CONCRETE/ MASONRY	4	$\frac{1}{4}$" Ø ITW TAPCON	1.0	2.50
ANCHOR BRACKET	ALUM. MULLION	8	$\frac{1}{4}$" SELF-DRILLING SMS	3 THREADS	0.50

NOTE

-HEAD, SILL AND JAMB HAVE SIMILAR DETAILS

NOTE

DETAILS SHOWN ARE TYPICAL FOR ALL MULLION & CLIP ASSEMBLIES. SEE SHEETS 5-10 FOR ALLOWABLE MULLION CONFIGURATIONS, SIZES, AND DESIGN PRESSURES.

AMERICAN CRAFTSMAN WINDOWS
PLY GEM WINDOWS
SILVER LINE WINDOWS AND DOORS

ONE SILVERLINE DRIVE
NORTH BRUNSWICK, NJ 08902
PH: (888) 741-0354

TITLE: *SERIES 7537 STRUCTURAL BEAM MULLION* VERTICAL SECTIONS

PREPARED BY: BUILDING DROPS, INC.
1900 NE Miami Ct. Units 2-15
Miami, FL 33132
PH: (954)399-8478
FAX: (954)744.4738
WEB: www.buildingdrops.com

REMARKS	BY	DATE
6TH FBC EDITION	AG	10/17
7TH FBC EDITION	LH	10/20
8th FBC EDITION	LH	09/23
CURRENT FBC	LH	01/25

THE INSTALLATION DETAILS DESCRIBED HEREIN ARE GENERIC AND MAY NOT REFLECT ACTUAL CONDITIONS FOR A SPECIFIC SITE. IF SITE CONDITIONS CAUSE INSTALLATION TO DEVIATE FROM THE REQUIREMENTS DETAILED HEREIN, A LICENSED ENGINEER OR ARCHITECT SHALL PREPARE SITE SPECIFIC DOCUMENTS FOR USE WITH THIS DOCUMENT.

HERMES F. NORERO LICENSE No. 73778 STATE OF FLORIDA PROFESSIONAL ENGINEER

HERMES F. NORERO P.E.
FLORIDA PE LIC No. 73778
BUILDING DROPS, INC
1900 NE MIAMI CT. UNITS 2–15
MIAMI, FL 33132
FBPE CERT. OF AUTHORIZATION No. 29578

FL #: FL 6067

DATE: 10.06.17

DWG. BY: AG | CHK. BY: HFN

SCALE: NTS

DWG. #: SWD016

SHEET 4 OF 6

MAXIMUM DESIGN PRESSURE CAPACITY CHART (PSF): STRUCTURAL MULLIONS (ONE-WAY)

L - Mull Length (in)	W - Tributary Width (in)																	
	18.0	***20.0***	***22.0***	***24.0***	***26.0***	***28.0***	***30.0***	***32.0***	***34.0***	***36.0***	***38.0***	***40.0***	***42.0***	***44.0***	***46.0***	***48.0***	***50.0***	***52.0***
24.0	100.0	100.0	100.0	100.0	100.0	100.0	100.0	100.0	100.0	100.0	100.0	100.0	100.0	100.0	100.0	100.0	100.0	100.0
26.0	100.0	100.0	100.0	100.0	100.0	100.0	100.0	100.0	100.0	100.0	100.0	100.0	100.0	100.0	100.0	100.0	100.0	100.0
28.0	100.0	100.0	100.0	100.0	100.0	100.0	100.0	100.0	100.0	100.0	100.0	100.0	100.0	100.0	100.0	100.0	100.0	100.0
30.0	100.0	100.0	100.0	100.0	100.0	100.0	100.0	100.0	100.0	100.0	100.0	100.0	100.0	100.0	100.0	100.0	100.0	100.0
32.0	100.0	100.0	100.0	100.0	100.0	100.0	100.0	100.0	100.0	100.0	100.0	100.0	100.0	100.0	100.0	100.0	100.0	100.0
34.0	100.0	100.0	100.0	100.0	100.0	100.0	100.0	100.0	100.0	100.0	100.0	100.0	100.0	100.0	100.0	100.0	100.0	100.0
36.0	100.0	100.0	100.0	100.0	100.0	100.0	100.0	100.0	100.0	100.0	100.0	100.0	100.0	100.0	100.0	100.0	100.0	100.0
38.0	100.0	100.0	100.0	100.0	100.0	100.0	100.0	100.0	100.0	100.0	100.0	100.0	100.0	100.0	100.0	100.0	100.0	100.0
40.0	100.0	100.0	100.0	100.0	100.0	100.0	100.0	100.0	100.0	100.0	100.0	100.0	100.0	100.0	100.0	100.0	100.0	100.0
42.0	100.0	100.0	100.0	100.0	100.0	100.0	100.0	100.0	100.0	100.0	100.0	100.0	100.0	100.0	100.0	100.0	100.0	100.0
44.0	100.0	100.0	100.0	100.0	100.0	100.0	100.0	100.0	100.0	100.0	100.0	100.0	100.0	100.0	100.0	100.0	100.0	100.0
46.0	100.0	100.0	100.0	100.0	100.0	100.0	100.0	100.0	100.0	100.0	100.0	100.0	100.0	100.0	100.0	100.0	100.0	100.0
48.0	100.0	100.0	100.0	100.0	100.0	100.0	100.0	100.0	100.0	100.0	100.0	100.0	100.0	100.0	100.0	100.0	100.0	100.0
50.0	100.0	100.0	100.0	100.0	100.0	100.0	100.0	100.0	100.0	100.0	100.0	100.0	100.0	100.0	100.0	100.0	100.0	100.0
52.0	100.0	100.0	100.0	100.0	100.0	100.0	100.0	100.0	100.0	100.0	100.0	100.0	100.0	100.0	100.0	100.0	100.0	100.0
54.0	100.0	100.0	100.0	100.0	100.0	100.0	100.0	100.0	100.0	100.0	100.0	100.0	100.0	100.0	100.0	100.0	100.0	100.0
56.0	100.0	100.0	100.0	100.0	100.0	100.0	100.0	100.0	100.0	100.0	100.0	100.0	100.0	100.0	100.0	100.0	99.6	99.0
58.0	100.0	100.0	100.0	100.0	100.0	100.0	100.0	100.0	100.0	100.0	100.0	100.0	99.3	97.5	95.9	94.6	93.6	92.8
60.0	100.0	100.0	100.0	100.0	100.0	100.0	100.0	100.0	100.0	100.0	99.1	96.5	94.2	92.3	90.7	89.3	88.2	87.3
62.0	100.0	100.0	100.0	100.0	100.0	100.0	100.0	100.0	100.0	97.5	94.5	91.9	89.6	87.7	86.0	84.6	83.4	82.5
64.0	100.0	100.0	100.0	100.0	100.0	100.0	100.0	100.0	96.6	93.2	90.3	87.7	85.5	83.5	81.8	80.4	79.2	78.1
66.0	100.0	100.0	100.0	100.0	100.0	100.0	100.0	96.5	92.7	89.3	86.4	83.9	81.7	79.7	78.0	76.6	75.3	74.2
68.0	100.0	100.0	100.0	100.0	100.0	100.0	97.1	92.8	89.0	85.8	82.9	80.4	78.2	76.3	74.6	73.1	71.8	70.7
70.0	100.0	100.0	100.0	100.0	100.0	98.4	93.6	89.3	85.7	82.5	79.7	77.2	75.0	73.1	71.4	69.9	68.6	67.5
72.0	100.0	100.0	100.0	100.0	100.0	95.1	90.3	86.1	82.5	79.4	76.6	74.2	72.1	70.2	68.5	67.0	65.7	64.5
74.0	100.0	100.0	100.0	100.0	97.3	91.9	87.2	83.2	79.7	76.6	73.9	71.5	69.3	67.5	65.8	64.3	63.0	61.8

TABLE NOTES:

1. SEE SHEET 1 FOR INSTRUCTIONS ON USING TABLES. SEE SHEET 4 FOR TYPICAL INSTALLATION METHODS & CLIP DETAILS.
2. LINEAR INTERPOLATION BETWEEN LISTED WIDTHS AND SPANS IS ALLOWED.
3. SEE THIS SHEET FOR SPECIFIC MULLION DIMENSIONS.
4. SEE SHEET 3 FOR SPECIFIC CLIP DIMENSIONS.
5. ANCHOR REQUIREMENTS:
   - WOOD: #12 WOOD SCREWS
   - CMU: 3/16" ITW TAPCONS
   - CONCRETE: 3/16" ITW TAPCONS
   - METAL: 12-14 SELF-DRILLING SCREWS (GRADE 5)
6. INSTALLATION SUBSTRATES:
   - WOOD ANCHORS SHALL HAVE A MIN. EMBEDMENT OF 1-1/2" & EDGE DISTANCE OF 1". WOOD SHALL BE MIN. S.G.=0.55.
   - HOLLOW CMU ANCHORS SHALL HAVE A MIN. EMBEDMENT OF 1-1/4" & EDGE DISTANCE OF 2-1/2". HOLLOW CMU SHALL BE MEDIUM WEIGHT CONFORMING TO ASTM C 90.
   - CONCRETE ANCHORS SHALL HAVE A MIN. EMBEDMENT OF 1-3/4" & EDGE DISTANCE OF 2-1/2". CONCRETE SHALL BE MIN. 4000 PSI.
   - METAL ANCHORS SHALL HAVE A MIN. (3) THREADS PENETRATION BEYOND METAL STRUCTURE. STEEL SHALL BE MIN. 18 GA. (0.045" THICK) 33 KSI YIELD. ALUMINUM SHALL BE MIN. 1/8" THICK ALUMINUM 6063-T5.
7. MAXIMUM DEFLECTION HAS BEEN LIMITED TO L/175.

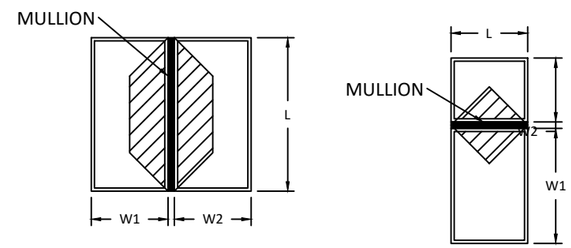

ONE-WAY MULLION DIAGRAMS

TRIBUTARY WIDTH = $\frac{W1+W2}{2}$

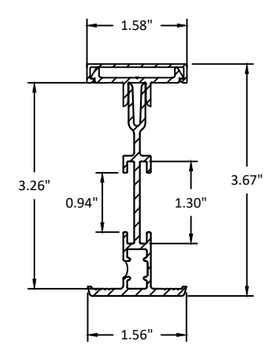

7537

QUALIFIED ANCHOR CLIP

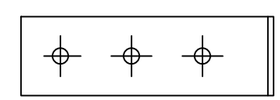

MULLION ANCHOR BRACKET
ALUMINUM (6063-T6)

AMERICAN CRAFTSMAN WINDOWS
PLY GEM WINDOWS
SILVER LINE WINDOWS AND DOORS

ONE SILVERLINE DRIVE
NORTH BRUNSWICK, NJ 08902
PH: (888) 741-0354

TITLE: *SERIES 7537 STRUCTURAL BEAM MULLION*

MULLION LOAD TABLES FOR ONE-WAY

PREPARED BY:
BUILDING DROPS, INC.
1900 NE Miami Ct. Units 2-15
Miami, FL 33132
PH: (954)399-8478
FAX: (954)744.4738
WEB: www.buildingdrops.com

REMARKS	BY	DATE
6TH FBC EDITION	AG	10/17
7TH FBC EDITION	LH	10/20
8th FBC EDITION	LH	09/23
CURRENT FBC	LH	01/25

THE INSTALLATION DETAILS DESCRIBED HEREIN ARE GENERIC AND MAY NOT REFLECT ACTUAL CONDITIONS FOR A SPECIFIC SITE. IF SITE CONDITIONS CAUSE INSTALLATION TO DEVIATE FROM THE REQUIREMENTS DETAILED HEREIN, A LICENSED ENGINEER OR ARCHITECT SHALL PREPARE SITE SPECIFIC DOCUMENTS FOR USE WITH THIS DOCUMENT.

HERMES F. NORERO LICENSE No. 73778 STATE OF FLORIDA PROFESSIONAL ENGINEER

HERMES F. NORERO, P.E.
FLORIDA P.E. No 73778
BUILDING DROPS, INC
1900 NE MIAMI CT. UNITS 2–15
MIAMI, FL 33132
FBPE CERT. OF AUTHORIZATION No. 29578

FL #: FL 6067

DATE: 10.06.17

DWG. BY: AG | CHK. BY: HFN

SCALE: NTS

DWG. #: SWD016

SHEET 5 OF 6

MAXIMUM DESIGN PRESSURE CAPACITY CHART (PSF): STRUCTURAL MULLIONS (TWO-WAY)

L - Mull Length (in)	W - Tributary Width (in)																	
	18.0	***20.0***	***22.0***	***24.0***	***26.0***	***28.0***	***30.0***	***32.0***	***34.0***	***36.0***	***38.0***	***40.0***	***42.0***	***44.0***	***46.0***	***48.0***	***50.0***	***52.0***
24.0	100.0	100.0	100.0	100.0	100.0	100.0	100.0	100.0	100.0	100.0	100.0	100.0	100.0	100.0	100.0	100.0	100.0	100.0
26.0	100.0	100.0	100.0	100.0	100.0	100.0	100.0	100.0	100.0	100.0	100.0	100.0	100.0	100.0	100.0	100.0	100.0	100.0
28.0	100.0	100.0	100.0	100.0	100.0	100.0	100.0	100.0	100.0	100.0	100.0	100.0	100.0	100.0	100.0	100.0	100.0	100.0
30.0	100.0	100.0	100.0	100.0	100.0	100.0	100.0	100.0	100.0	100.0	100.0	100.0	100.0	100.0	100.0	100.0	100.0	99.0
32.0	100.0	100.0	100.0	100.0	100.0	100.0	100.0	100.0	100.0	100.0	100.0	100.0	100.0	100.0	100.0	100.0	96.5	92.8
34.0	100.0	100.0	100.0	100.0	100.0	100.0	100.0	100.0	100.0	100.0	100.0	100.0	100.0	100.0	98.7	94.6	90.8	87.3
36.0	100.0	100.0	100.0	100.0	100.0	100.0	100.0	100.0	100.0	100.0	100.0	100.0	100.0	97.5	93.2	89.3	85.8	82.5
38.0	100.0	100.0	100.0	100.0	100.0	100.0	100.0	100.0	100.0	100.0	100.0	100.0	96.7	92.3	88.3	84.6	81.2	78.1
40.0	100.0	100.0	100.0	100.0	100.0	100.0	100.0	100.0	100.0	100.0	100.0	96.5	91.9	87.7	83.9	80.4	77.2	74.2
42.0	100.0	100.0	100.0	100.0	100.0	100.0	100.0	100.0	100.0	100.0	96.7	91.9	87.5	83.5	79.9	76.6	73.5	70.7
44.0	100.0	100.0	100.0	100.0	100.0	100.0	100.0	100.0	100.0	97.5	92.3	87.7	83.5	79.7	76.3	73.1	70.2	67.5
46.0	100.0	100.0	100.0	100.0	100.0	100.0	100.0	100.0	98.7	93.2	88.3	83.9	79.9	76.3	73.0	69.9	67.1	64.5
48.0	100.0	100.0	100.0	100.0	100.0	100.0	100.0	100.0	94.6	89.3	84.6	80.4	76.6	73.1	69.9	67.0	64.3	61.8
50.0	100.0	100.0	100.0	100.0	100.0	100.0	100.0	96.5	90.8	85.8	81.2	77.2	73.5	70.2	67.1	64.3	61.7	59.4
52.0	100.0	100.0	100.0	100.0	100.0	100.0	99.0	92.8	87.3	82.5	78.1	74.2	70.7	67.5	64.5	61.8	59.4	57.1
54.0	100.0	100.0	100.0	100.0	100.0	100.0	95.3	89.3	84.1	79.4	75.2	71.5	68.1	65.0	62.1	59.6	57.2	55.0
56.0	100.0	100.0	100.0	100.0	100.0	98.4	91.9	86.1	81.1	76.6	72.5	68.9	65.6	62.6	59.9	57.4	55.1	53.0
58.0	100.0	100.0	100.0	100.0	100.0	95.1	88.7	83.2	78.3	73.9	70.0	66.5	63.4	60.5	57.9	55.4	53.2	51.2
60.0	100.0	100.0	100.0	100.0	99.0	91.9	85.8	80.4	75.7	71.5	67.7	64.3	61.3	58.5	55.9	53.6	51.5	49.5
62.0	100.0	100.0	100.0	100.0	95.8	88.9	83.0	77.8	73.2	69.2	65.5	62.2	59.3	56.6	54.1	51.9	49.8	47.9
64.0	100.0	100.0	100.0	100.0	92.8	86.1	80.4	75.4	70.9	67.0	63.5	60.3	57.4	54.8	52.4	50.3	48.2	46.4
66.0	100.0	100.0	100.0	97.5	90.0	83.5	78.0	73.1	68.8	65.0	61.6	58.5	55.7	53.2	50.8	48.7	46.8	45.0
68.0	100.0	100.0	100.0	94.6	87.3	81.1	75.7	70.9	66.8	63.1	59.7	56.8	54.1	51.6	49.4	47.3	45.4	43.7
70.0	100.0	100.0	100.0	91.9	84.8	78.8	73.5	68.9	64.9	61.3	58.0	55.1	52.5	50.1	47.9	45.9	44.1	42.4
72.0	100.0	100.0	97.5	89.3	82.5	76.6	71.5	67.0	63.1	59.6	56.4	53.6	51.0	48.7	46.6	44.7	42.9	41.2
74.0	100.0	100.0	94.8	86.9	80.2	74.5	69.5	65.2	61.4	57.9	54.9	52.2	49.7	47.4	45.3	43.5	41.7	40.1

TABLE NOTES:

1. SEE SHEET 1 FOR INSTRUCTIONS ON USING TABLES. SEE SHEET 4 FOR TYPICAL INSTALLATION METHODS & CLIP DETAILS.
2. LINEAR INTERPOLATION BETWEEN LISTED WIDTHS AND SPANS IS ALLOWED.
3. SEE THIS SHEET FOR SPECIFIC MULLION DIMENSIONS.
4. SEE SHEET 3 FOR SPECIFIC CLIP DIMENSIONS.
5. ANCHOR REQUIREMENTS:
   - WOOD: #12 WOOD SCREWS
   - CMU: 3/16" ITW TAPCONS
   - CONCRETE: 3/16" ITW TAPCONS
   - METAL: 12-14 SELF-DRILLING SCREWS (GRADE 5)
6. INSTALLATION SUBSTRATES:
   - WOOD ANCHORS SHALL HAVE A MIN. EMBEDMENT OF 1-1/2" & EDGE DISTANCE OF 1". WOOD SHALL BE MIN. S.G.=0.55.
   - HOLLOW CMU ANCHORS SHALL HAVE A MIN. EMBEDMENT OF 1-1/4" & EDGE DISTANCE OF 2-1/2". HOLLOW CMU SHALL BE MEDIUM WEIGHT CONFORMING TO ASTM C 90.
   - CONCRETE ANCHORS SHALL HAVE A MIN. EMBEDMENT OF 1-3/4" & EDGE DISTANCE OF 2-1/2". CONCRETE SHALL BE MIN. 4000 PSI.
   - METAL ANCHORS SHALL HAVE A MIN. (3) THREADS PENETRATION BEYOND METAL STRUCTURE. STEEL SHALL BE MIN. 18 GA. (0.045" THICK) 33 KSI YIELD. ALUMINUM SHALL BE MIN. 1/8" THICK ALUMINUM 6063-T5.
7. MAXIMUM DEFLECTION HAS BEEN LIMITED TO L/175.

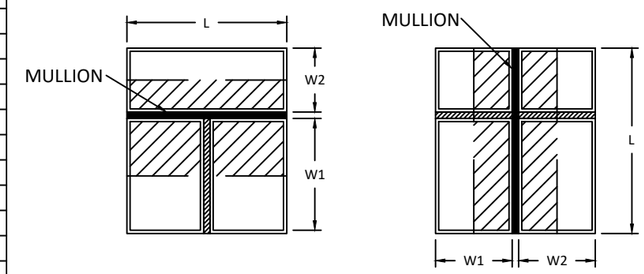

TWO-WAY MULLION DIAGRAMS

TRIBUTARY WIDTH = $\frac{W1+W2}{2}$

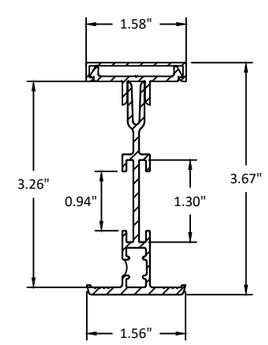

7537

QUALIFIED ANCHOR CLIP

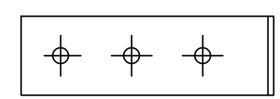

MULLION ANCHOR BRACKET
ALUMINUM (6063-T6)

AMERICAN CRAFTSMAN WINDOWS
PLY GEM WINDOWS
SILVER LINE WINDOWS AND DOORS

ONE SILVERLINE DRIVE
NORTH BRUNSWICK, NJ 08902
PH: (888) 741-0354

TITLE: *SERIES 7537 STRUCTURAL BEAM MULLION*
MULLION LOAD TABLES FOR TWO-WAY

PREPARED BY:
BUILDING DROPS, INC.
1900 NE Miami Ct. Units 2-15
Miami, FL 33132
PH: (954)399-8478
FAX: (954)744.4738
WEB: www.buildingdrops.com

REMARKS	BY	DATE
6TH FBC EDITION	AG	10/17
7TH FBC EDITION	LH	10/20
8th FBC EDITION	LH	09/23
CURRENT FBC	LH	01/25

THE INSTALLATION DETAILS DESCRIBED HEREIN ARE GENERIC AND MAY NOT REFLECT ACTUAL CONDITIONS FOR A SPECIFIC SITE. IF SITE CONDITIONS CAUSE INSTALLATION TO DEVIATE FROM THE REQUIREMENTS DETAILED HEREIN, A LICENSED ENGINEER OR ARCHITECT SHALL PREPARE SITE SPECIFIC DOCUMENTS FOR USE WITH THIS DOCUMENT.

HERMES F. NORERO
LICENSE
No. 73778
STATE OF
FLORIDA
PROFESSIONAL ENGINEER

HERMES F. NORERO, P.E.
FLORIDA P.E. No 73778
BUILDING DROPS, INC
1900 NE MIAMI CT. UNITS 2–15
MIAMI, FL 33132
FBPE CERT. OF AUTHORIZATION No. 29578

FL #: FL 6067

DATE: 10.06.17

DWG. BY: AG | CHK. BY: HFN

SCALE: NTS

DWG. #: SWD016

SHEET 6 OF 6