SINGLE HUNG - LARGE MISSILE IMPACT

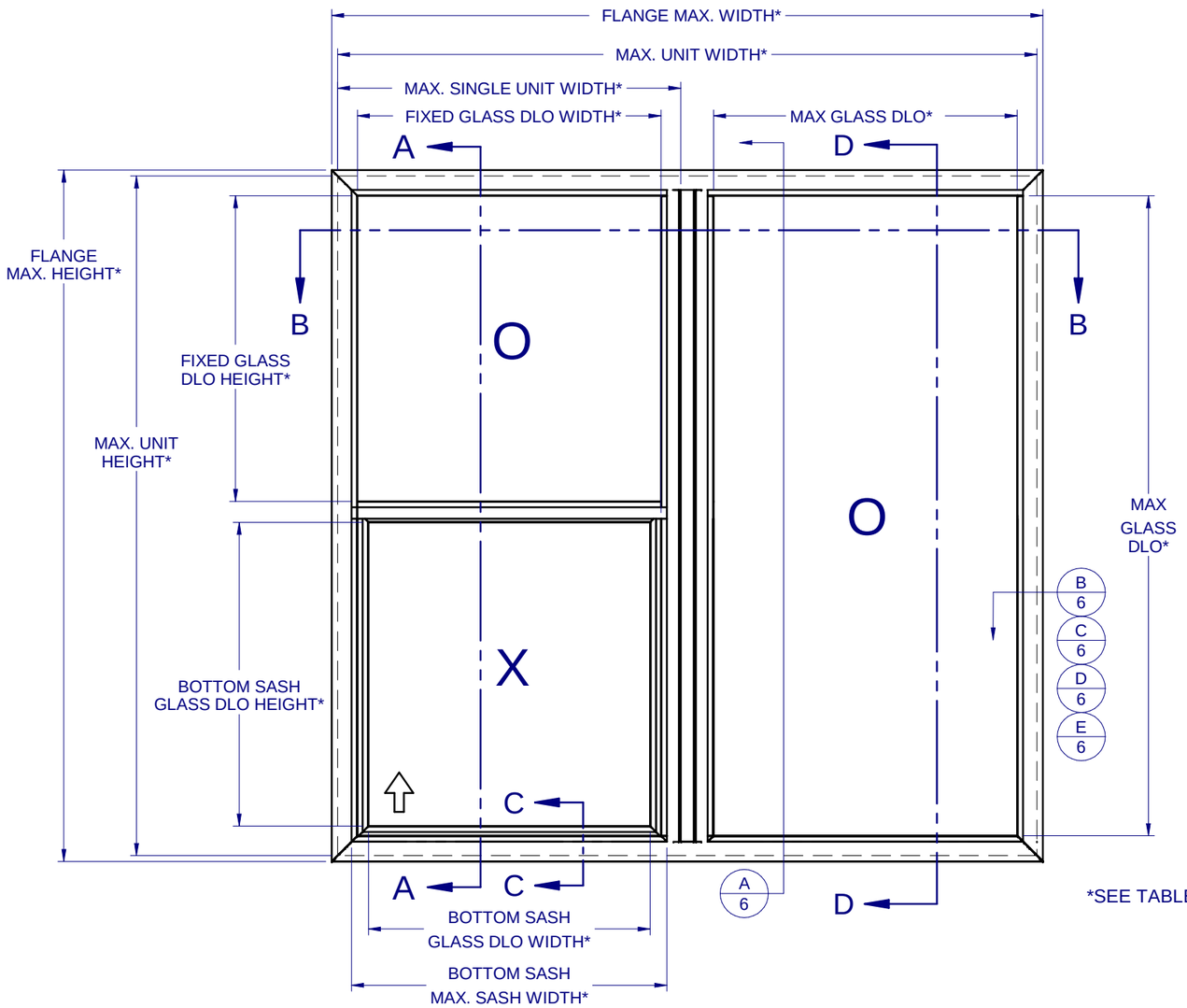

*SEE TABLE BELOW FOR MAX. SIZES

GENERAL NOTES:

1. THE PRODUCT SHOWN HEREIN IS DESIGNED AND MANUFACTURED TO COMPLY WITH THE FLORIDA BUILDING CODE (FBC), CURRENT EDITION INCLUDING IMPACT AS DEFINED IN ASTM E 1996 PER THE FBC. SEE TABLE ON SHEET 1 FOR RATING AND MAX SIZE

2. GLAZING OPTIONS: (SEE SHEET 2)

3. CONFIGURATIONS: "O/X - O"

4. DESIGN PRESSURE RATING:
   -NEGATIVE DESIGN LOADS BASED ON, TESTED PRESSURE AND GLASS TABLES ASTM E-1300.
   -POSITIVE DESIGN LOADS BASED ON, TESTED PRESSURE, WATER INFILTRATION TEST PRESSURE AND GLASS TABLES ASTM E-1300.
   -DESIGN LOADS ARE BASED ON ALLOWABLE STRESS DESIGN, ASD.

5. ANCHORAGE: THE 33 1/3% STRESS INCREASE HAS NOT BEEN USED IN THE DESIGN OF THIS PRODUCT. SEE SHEET 6 FOR ANCHOR DETAILS. WINDLOAD DURATION FACTOR Cd=1.6 WAS USED FOR WOOD ANCHOR CALCULATIONS.

6. PRODUCT APPROVED FOR IMPACT RESISTANCE. SHUTTERS ARE NOT REQUIRED. THE IMPACT ROTARY LOCKS, WHEN REQUIRED, ARE INTENDED TO BE LEFT UNLATCHED DURING NORMAL OPERATION OF THIS PRODUCT, BUT MUST BE ENGAGED PRIOR TO EXPOSURE TO HURRICANE WINDS AND FLYING DEBRIS.

7. ALL FRAMES AND VENTS FULLY WELDED. SMALL JOINT SEAM SEALANT USED AT FIXED MEETING RAIL , INTERNAL MULL ENDS AND JAMBS.

8. THE DESIGNATION X AND O STAND FOR THE FOLLOWING:
   X = OPERABLE SASH, O = FIXED SASH

9. SECTION CALLOUTS APPLY TO ALL ELEVATIONS IN A SIMILAR LOCATION.

10. EXTERNAL WEEP SLOT = 1/4" x 1-1/4" LOCATED 4" FROM BOTH ENDS.

Lucas Turner
2026.09.21
16:02:46
-05'00'

LOCATION	FLANGE MAX. SIZE	MAX. UNIT SIZE	MAX SINGLE UNIT WIDTH	SINGLE-HUNG FIXED GLASS DLO	BOTTOM SASH MAX SASH SIZE	BOTTOM SASH MAX GLASS DLO	MAX PICTURE WINDOW GLASS DLO	LOCK	DESIGN PRESSURE RATING	IMPACT RATING
NON-HVHZ	75-3/8" x 73-1/4"	74-1/8" x 72"	36-3/8"	32-3/16" X 31-15/16"	32-15/16" X 35-5/16"	29-5/8" X 32"	32-3/16" X 67-13/16"	W/ SWEEP LOCKS	+/- 65 PSF	WIND ZONE 4 - MISSILE D
HVHZ									+/- 67.5 PSF	
WIND ZONE 3	73-5/8" x 72-3/4"	72-3/8" X 71-1/2"	35-1/2"	31-5/16" x 31-3/4"	32-1/16" x 35-1/16"	28-3/4" x 31-3/4"	31-5/16" X 67-5/16"	NO SWEEP LOCKS	+40 / -67.5 PSF	WIND ZONE 3 - MISSILE D

TABLE OF CONTENTS

GENERAL NOTES & ELEVATIONS.....1
GLAZING DETAIL.....2
SECTION VIEWS.....3
BOM & EXTRUSIONS.....4
ANCHOR SCHEDULE & NOTES.....5
INSTALLATION DETAILS.....6

CWS
1900 SW 44TH AVE.
OCALA, FLORIDA 34474
WWW.CWS.CC

VSH05

8100/8150 PVC SINGLE HUNG/ PICTURE WINDOW IMPACT

PROPRIETARY AND CONFIDENTIAL
THE INFORMATION CONTAINED IN THIS DRAWING IS THE SOLE PROPERTY OF CUSTOM WINDOW SYSTEMS, INC. ANY REPRODUCTION IN PART OR AS A WHOLE WITHOUT THE WRITTEN PERMISSION OF CUSTOM WINDOW SYSTEMS, INC IS PROHIBITED.

FLORIDA APPROVAL NO.:
5823

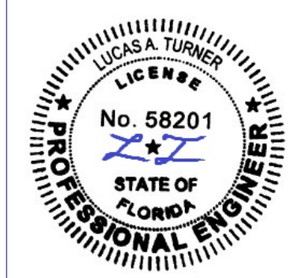

9/21/2026

LUCAS A. TURNER, P.E.
FL PE # 58201
Turner Engineering & Consulting, Inc.
2428 Old Natchez Trc Trl
Camden, TN 38320
PH. 941-380-1574

SHEET DESCRIPTION:
GENERAL NOTES AND ELEVATIONS

DRAWN BY:	DATE:
MCS	8/27/2026
DWG #: CWS-1267	REV.: A
SCALE: 1:15	SHEET 1 OF 6

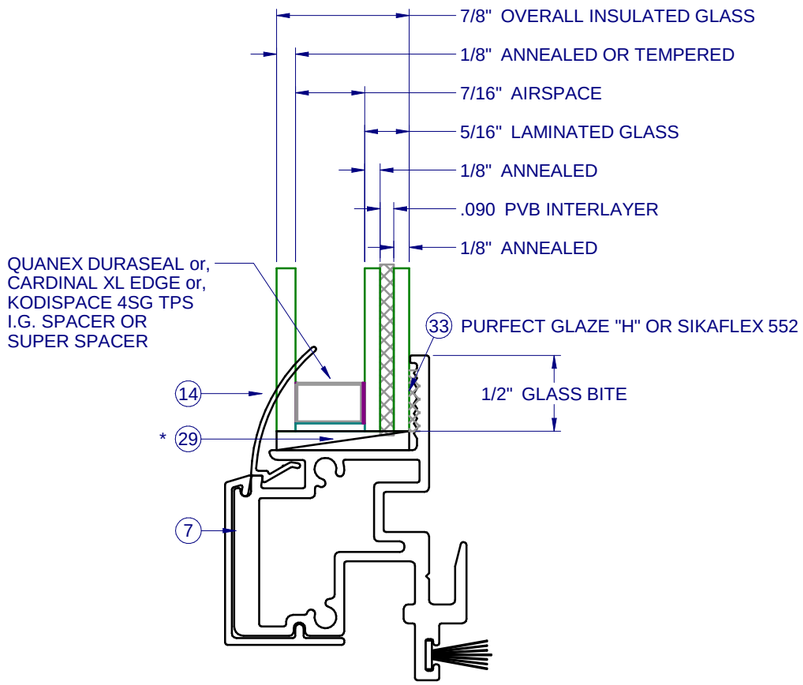

FIXED LITE

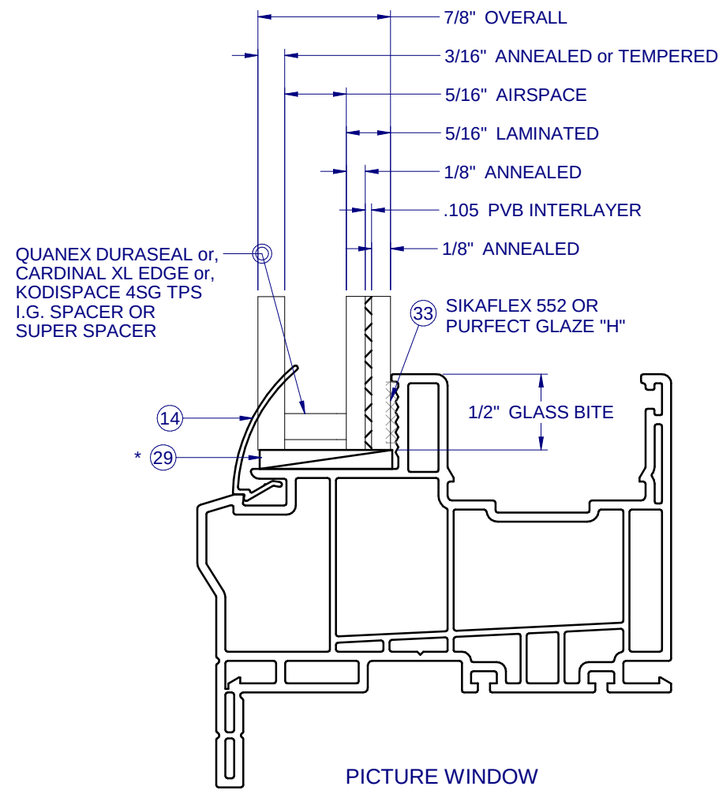

PICTURE WINDOW

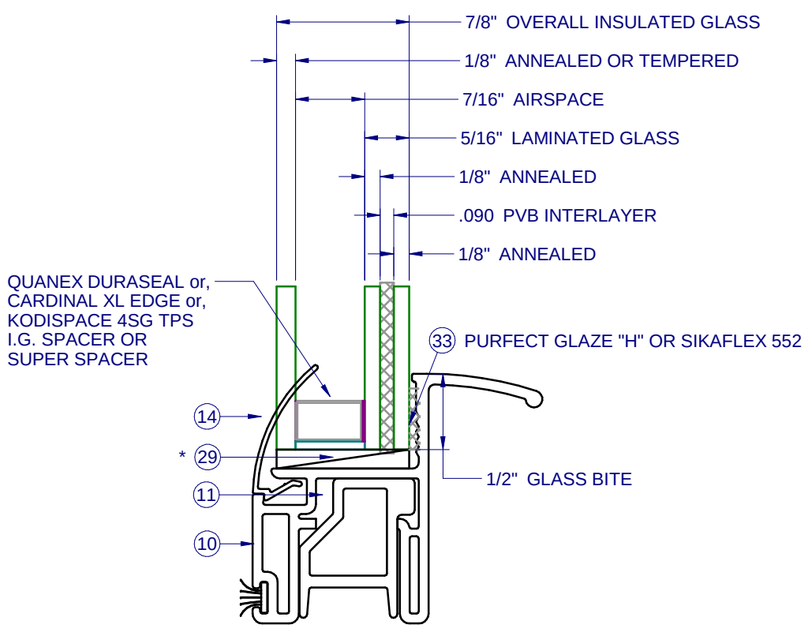

SASH LITE

NOTES:
-GLASS WHEN SACRAFICIAL LITE IS TEMPERED AND AS INDICATED IN THIS APPROVAL IS SGCC CERTIFIED TO ANSI Z97.1 AND CPSC 16 CFR 1201, TO BE FIELD VERIFIED BY PERMANENT ETCHING MARK ON EACH GLASS LITE.

* SETTING BLOCKS PER FBC 2411.3.3.1

CWS
1900 SW 44TH AVE.
OCALA, FLORIDA 34474
WWW.CWS.CC

VSH05

8100/8150 PVC SINGLE HUNG/ PICTURE WINDOW IMPACT

PROPRIETARY AND CONFIDENTIAL
THE INFORMATION CONTAINED IN THIS DRAWING IS THE SOLE PROPERTY OF CUSTOM WINDOW SYSTEMS, INC. ANY REPRODUCTION IN PART OR AS A WHOLE WITHOUT THE WRITTEN PERMISSION OF CUSTOM WINDOW SYSTEMS, INC IS PROHIBITED.

FLORIDA APPROVAL NO.:
5823

9/21/2026

LUCAS A. TURNER, P.E.
FL PE # 58201
Turner Engineering & Consulting, Inc.
2428 Old Natchez Trc Trl
Camden, TN 38320
PH. 941-380-1574

SHEET DESCRIPTION:
GLAZING DETAIL

DRAWN BY:	DATE:
MCS	8/27/2026
DWG #: CWS-1267	REV.: A
SCALE: 1:1	SHEET 2 OF 6

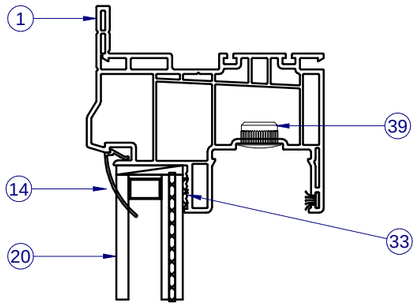

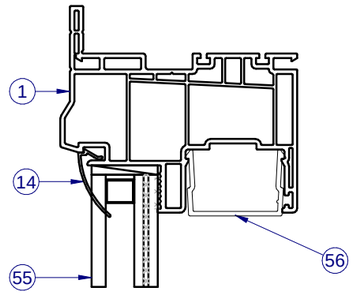

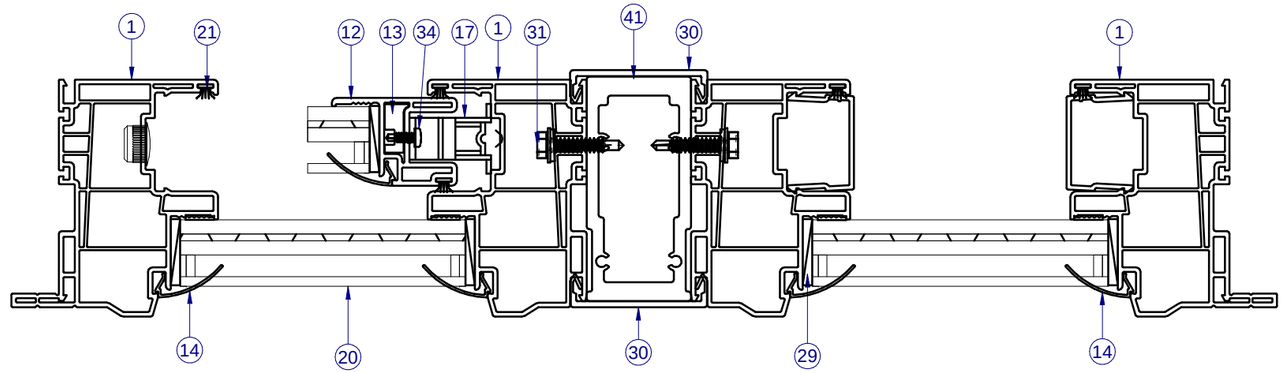

SECTION VIEW B-B

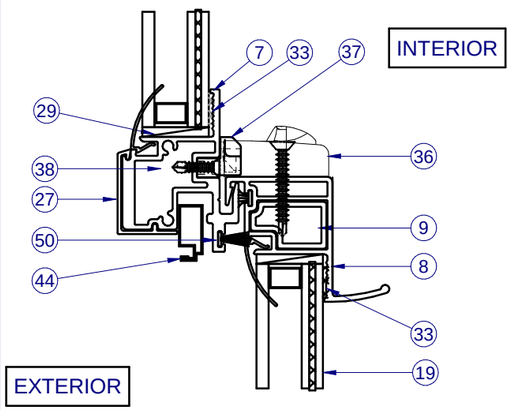

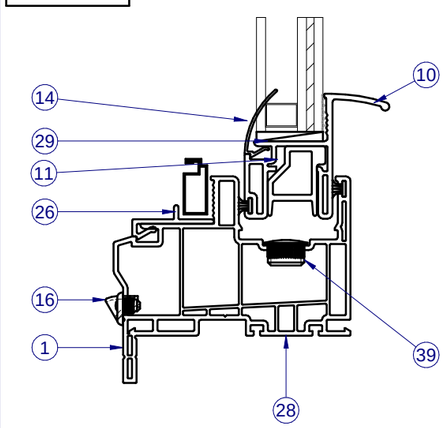

SECTION VIEW A-A
NO SWEEP LOCK REQUIRED FOR WIND ZONE 3
SEE CHART ON PAGE 1 FOR REQUIREMENTS

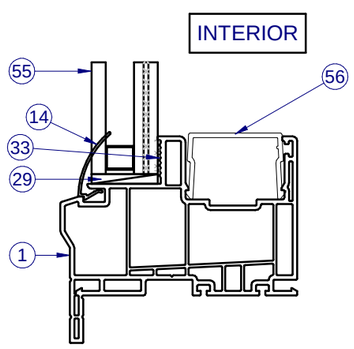

SECTION VIEW D-D

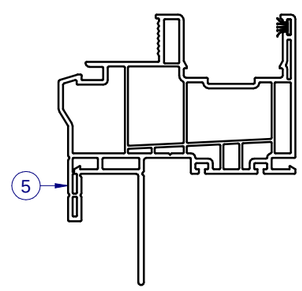

SECTION VIEW C-C
ALTERNATE FRAME
FLANGE WITH FIN

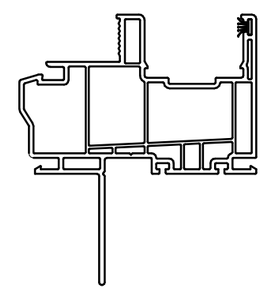

SECTION VIEW C-C
ALTERNATE FIN ONLY FRAME

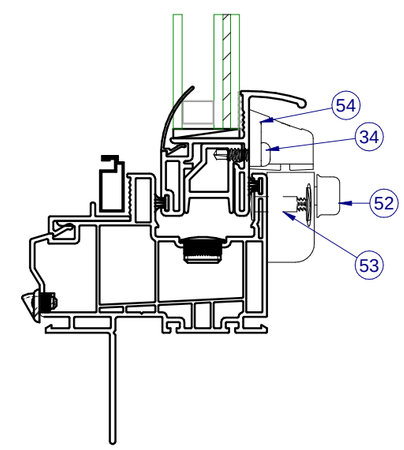

SECTION VIEW C-C
ALTERNATE SWEEP LOCK
SEE CHART ON PAGE 1
FOR REQUIREMENTS

ITEMS NOT SHOWN FOR CLARITY:
6, 15, 18, 25, 32 42, 45, 48

CWS
1900 SW 44TH AVE.
OCALA, FLORIDA 34474
WWW.CWS.CC

VSH05

8100/8150 PVC SINGLE HUNG/ PICTURE WINDOW IMPACT

PROPRIETARY AND CONFIDENTIAL
THE INFORMATION CONTAINED IN THIS DRAWING IS THE SOLE PROPERTY OF CUSTOM WINDOW SYSTEMS, INC. ANY REPRODUCTION IN PART OR AS A WHOLE WITHOUT THE WRITTEN PERMISSION OF CUSTOM WINDOW SYSTEMS, INC IS PROHIBITED.

FLORIDA APPROVAL NO.:
5823

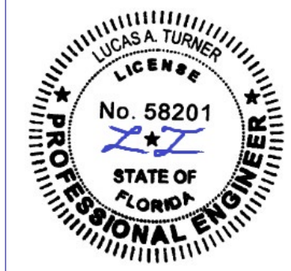

9/21/2026

LUCAS A. TURNER, P.E.
FL PE # 58201
Turner Engineering & Consulting, Inc.
2428 Old Natchez Trc Trl
Camden, TN 38320
PH. 941-380-1574

SHEET DESCRIPTION:
SECTION VIEWS

DRAWN BY:	DATE:
MCS	8/27/2026
DWG #: CWS-1267	REV.: A
SCALE: 1:2	SHEET 3 OF 6

PARTS LIST

ITEM	PART #	DESCRIPTION	MATERIAL
1	H-6222	Main Frame, Flg,	Vinyl
5	H-6231	Frame, Fin	Vinyl
6	S-5087	SASH STOP	Vinyl
7	H-2121	Alum. Fixed Meet. Rail	Alum
8	H-6224	Sash Top Rail	Vinyl
9	H-2124	Reinforcement for STR	Alum
10	H-6223	Sash Bottom Rail	Vinyl
11	H-2123	Reinforcement for SBR	Alum
12	H-6225	Sash Side Rail	Vinyl
13	S-2129	Reinforcement for SSR	Alum
14	S-6237	Glazing Bead	Vinyl
15	P-4056	SASH CAM FOR PVC WINDOW	Plastic
16	P-4479	Weep Housing & Flap Assm.	Plastic
17		Sash Balance	Steel
18	P-3295	Take Out Clip	Steel
19	Sash	SEE SHEET 2	GLASS
20	Fixed	SEE SHEET 2	GLASS
21	P-3305	Wstp., 0.270 x 0.187 High Density	Nylon
22	P-4638	#8 x 2-1/2 PH Mod. Truss, Type A, TEK 2	Steel
23		#10 x 1 1/2" Panhead SMS	Steel
25	S-6227	Screen Support	Vinyl
26	S-6226	Screen Catch	Vinyl
27	S-6228	Fixed Rail Cover	Vinyl
29	P-5612	Setting Block, .12 x 1 x 2	Rubber
30	S-6018	Mullbar Cover	Vinyl
31	P-3767	#10 x 1 Hex Head Tek	Steel
32	P-3342	Seam Sealer, SM-5504	
33		SikaFlex 552 or Purfect Glaze "H"	
34	P-3541	#8 x 1/2 Quadrex PH TEK	Steel
35	P-4051	#8 x 1 1/4" PH Flat Tek	Steel
36	P-3783	Lock	Steel
37	P-4069	Keeper	Steel
38	P-3539	#8 x 3/4" Phillips Square SMS	Steel
39	P-5588	Hole Plug	Plastic
41	H-2127	Internal Mullbar	Alum
44	P-3218	Screen frame	Alum
45	P-4754	SCREEN CORNER KEY (Rollform Screen 1" Offset "safety")	Plastic
46	P-5576	Screen Spline, .125" Black PE Rib	Rubber
47	P-3195	Screen Spring	Steel
48	P-4755	SCREEN CORNER KEY (Rollform Scrn 1" Offset "w/ safety tab")	Alum
49	P-4770	30" BetterVue Insect Screen, 18 x 16	Fiberglass
50	P-4959	Wstp., 0.420 x 0.187 back	Nylon
51	P-3541	#8 x 1/2, Pan Head, Tek	Steel
52	P-4951	SWEEP LOCK	
53	P-4633	Binding Post and Screw	
54	P-4952	SWEEP KEEPER	
55	Picture Window	SEE SHEET 2	GLASS
56	S-6025	Sash Stop / Filler	PVC

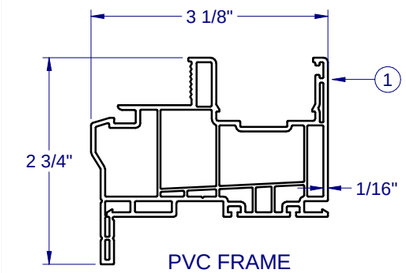

PVC FRAME FLANGE H-6222

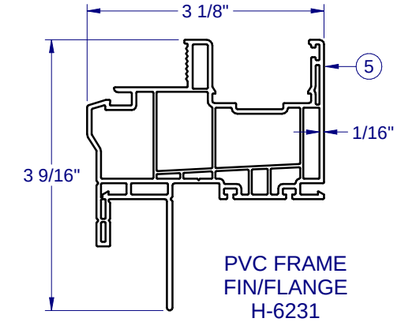

PVC FRAME FIN/FLANGE H-6231

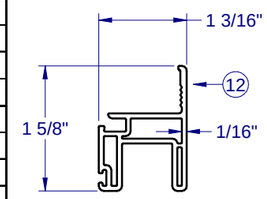

PVC SASH RAIL/STILE H-6225

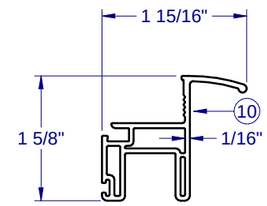

PVC SASH PULL RAIL/STILE H-6223

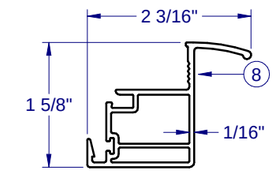

PVC SASH MTG RAIL H-6224

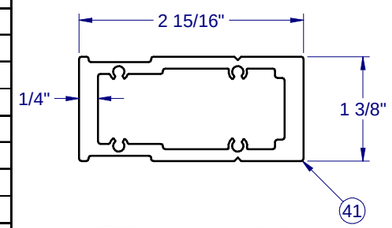

INTERNAL MULL BAR H-2127

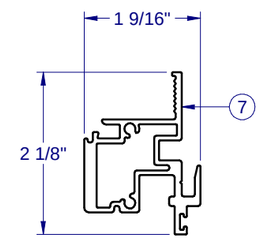

MTG RAIL H-2121

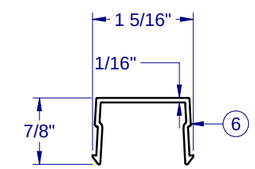

PVC SASH STOP S-5087

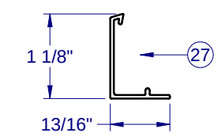

PVC MTG RAIL COVER S-6228

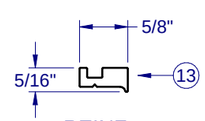

REINF. S-2129

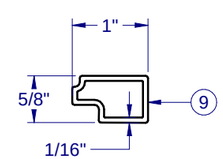

REINF. SASH MTG RAIL H-2124

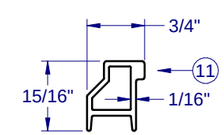

REINF. H-2123

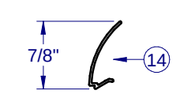

PVC GLAZING BEAD S-6237

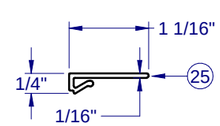

PVC SCREEN SUPPORT S-6227

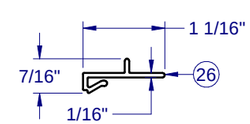

PVC SCREEN CATCH S-6226

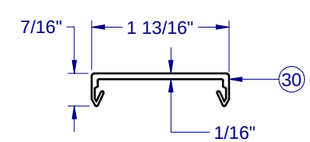

PVC MULLBAR COVER S-6018

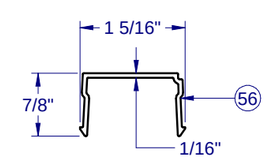

PVC SASH STOP S-6025

LINE ITEMS NOT USED: 42-43

NOTE: ALL ALUMINUM EXTRUSIONS ARE 6063-T6 UNLESS OTHERWISE NOTED.

FRAME CORNER CONSTRUCTION

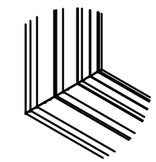
CORNER WELD (ALL SIDES) 1:8

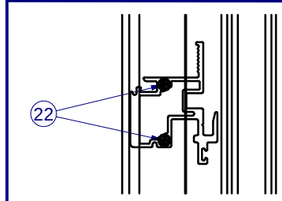

FIXED MEETING RAIL SCREWED TOGETHER WITH OUTERFRAME 1:8

CWS
1900 SW 44TH AVE.
OCALA, FLORIDA 34474
WWW.CWS.CC

VSH05

8100/8150 PVC SINGLE HUNG/ PICTURE WINDOW IMPACT

PROPRIETARY AND CONFIDENTIAL
THE INFORMATION CONTAINED IN THIS DRAWING IS THE SOLE PROPERTY OF CUSTOM WINDOW SYSTEMS, INC. ANY REPRODUCTION IN PART OR AS A WHOLE WITHOUT THE WRITTEN PERMISSION OF CUSTOM WINDOW SYSTEMS, INC IS PROHIBITED.

FLORIDA APPROVAL NO.: 5823

LUCAS A. TURNER LICENSE No. 58201 STATE OF FLORIDA PROFESSIONAL ENGINEER

9/21/2026

LUCAS A. TURNER, P.E.
FL PE # 58201
Turner Engineering & Consulting, Inc.
2428 Old Natchez Trc Trl
Camden, TN 38320
PH. 941-380-1574

SHEET DESCRIPTION: BOM AND EXTRUSIONS

DRAWN BY:	DATE:
MCS	8/27/2026
DWG #: CWS-1267	REV.: A
SCALE: 1:2	SHEET 4 OF 6

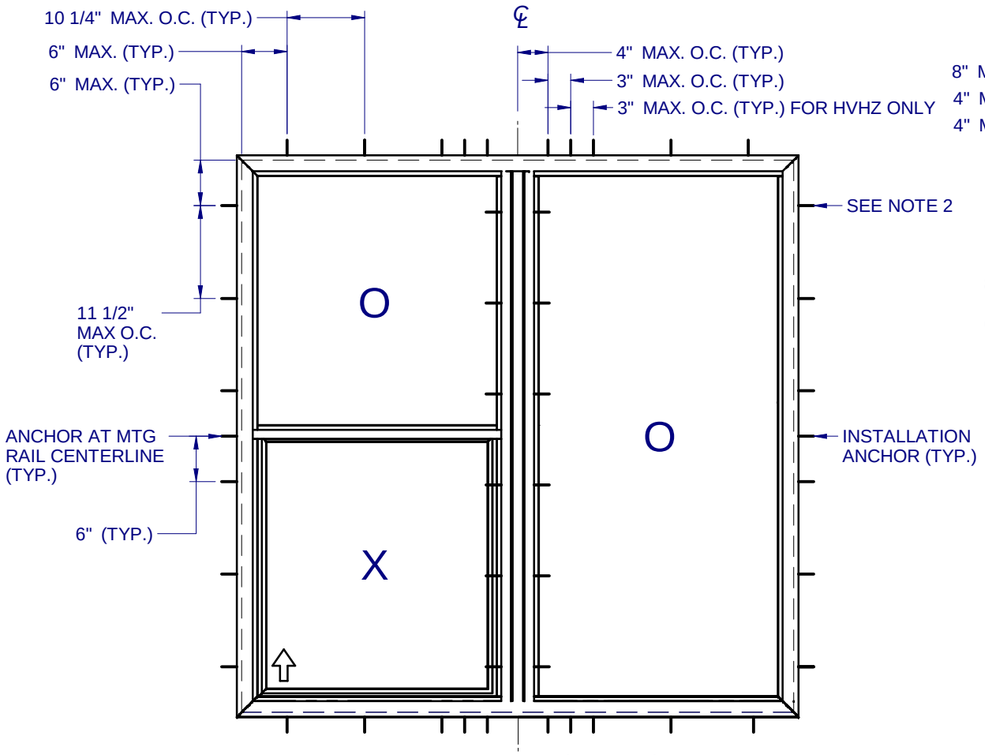

ANCHOR LAYOUT - (FLANGE)

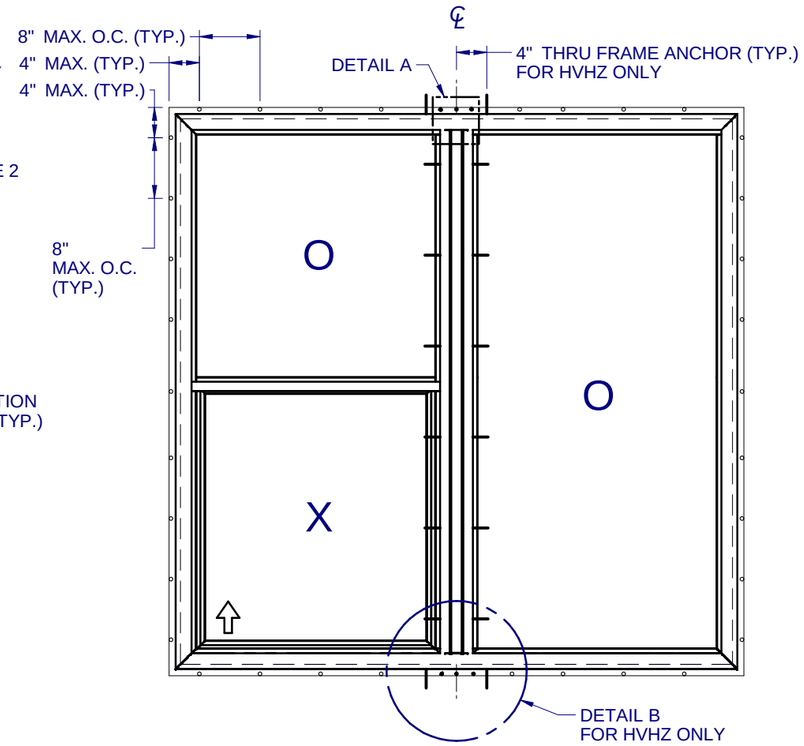

ANCHOR LAYOUT - (FIN)

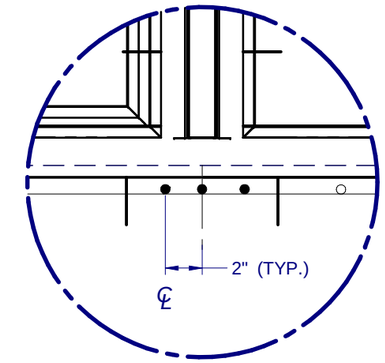

DETAIL B FOR HVHZ ONLY
ANCHOR REQUIRED THRU FIN WITHIN 1" OF MULLBAR CENTERLINE. (TYP.)

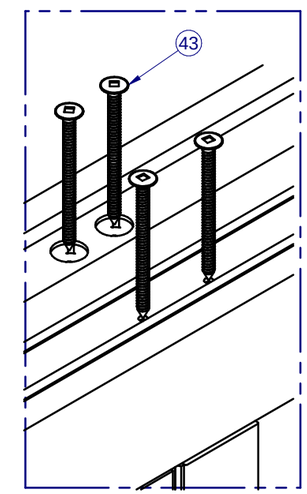

DETAIL A
INTERNAL MULL ATTACHMENT
1:2

NOTES:

1. INSTALL ONE ANCHOR AT EACH INSTALLATION LOCATION. SILL ANCHOR SPACING SAME AS HEAD.

2. SHIM AS REQ AT EACH INSTALLATION ANCHOR USING LOAD BEARING SHIMS. MAX. ALLOWABLE SHIM STACK TO BE 1/4". USE SHIMS WHERE SPACE GREATER THAN 1/16" IS PRESENT. LOAD BEARING SHIMS SHALL BE CONSTRUCTED OF HIGH DENSITY PLASTIC OR BETTER. WOOD SHIMS ARE NOT ALLOWED.

3. ANCHOR TYPE, SIZE, SPACING AND EMBEDMENT SHALL BE AS SPECIFIED IN THESE DRAWINGS, SEE TABLE 1, SHEET 6.

4. ALL INSTALLATION ANCHORS MUST BE MADE OF OR PROTECTED WITH A CORROSION RESISTANT MATERIAL OR COATING. DISSIMILAR METALS OR MATERIALS IN CONTACT WITH PRESSURE TREATED WOOD MUST BE PROTECTED TO PREVENT REACTION.

5. INSTALLATION ANCHORS SHALL BE IN ACCORDANCE WITH ANCHOR MANUFACTURER'S INSTALLATION INSTRUCTIONS, AND ANCHORS SHALL NOT BE USED IN SUBSTRATES WITH STRENGTHS LESS THAN THE MINIMUM SPECIFIED IN TABLE 1, SHEET 6.

6. ANCHOR EMBEDMENT TO SUBSTRATE SHALL BE BEYOND WALL DRESSING OR STUCCO. FOR CONCRETE/CMU OPENINGS, EMBEDMENT SHALL BE BEYOND WOOD BUCKS, IF USED, INTO SUBSTRATE. INSTALLATIONS TO SOLID CONCRETE OR GROUT-FILLED CMU MAY INCLUDE BUT DO NOT REQUIRE 1X WOOD BUCKS BETWEEN THE PRODUCT AND THE SUBSTRATE. INSTALLATIONS TO HOLLOW CMU REQUIRE THE USE OF 1X BUCKS BETWEEN THE PRODUCT AND SUBSTRATE.

7. A MINIMUM CENTER-TO-CENTER SPACING SHALL BE MAINTAINED BETWEEN ALL FASTENERS: 3" FOR MASONRY, 1" FOR WOOD AND METAL.

8. WOOD OR MASONRY OPENINGS, BUCKS AND BUCK FASTENERS SHALL BE PROPERLY DESIGNED BY THE ARCHITECT OR ENGINEER OF RECORD AND INSTALLED TO TRANSFER WIND LOADS TO THE STRUCTURE. SUBSTRATES SHALL MEET THE MINIMUM STRENGTH REQUIREMENTS AS SHOWN IN TABLE1, SHEET 6. CONCRETE AND MASONRY SUBSTRATES MAY NOT BE CRACKED.

9. SEALING AND FLASHING STRATEGIES FOR OVERALL WATER RESISTANCE OF INSTALLATION SHALL BE DONE BY OTHERS FOLLOWING THE CURRENT VERSION OF THE REFERENCE DOCUMENTS: FMA/AAMA 100(FIN WINDOWS), FMA/AAMA 200(FLANGE WINDOWS), FMA/WDMA 250(BOX WINDOWS), FMA/AAMA/WDMA 300(EXTERIOR DOORS)

CWS
1900 SW 44TH AVE.
OCALA, FLORIDA 34474
WWW.CWS.CC

VSH05

8100/8150 PVC SINGLE HUNG/ PICTURE WINDOW IMPACT

PROPRIETARY AND CONFIDENTIAL
THE INFORMATION CONTAINED IN THIS DRAWING IS THE SOLE PROPERTY OF CUSTOM WINDOW SYSTEMS, INC. ANY REPRODUCTION IN PART OR AS A WHOLE WITHOUT THE WRITTEN PERMISSION OF CUSTOM WINDOW SYSTEMS, INC IS PROHIBITED.

FLORIDA APPROVAL NO.:
5823

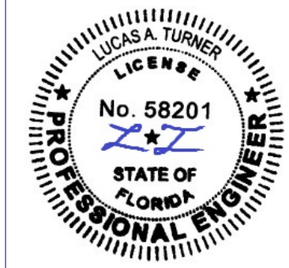

9/21/2026

LUCAS A. TURNER, P.E.
FL PE # 58201
Turner Engineering & Consulting, Inc.
2428 Old Natchez Trc Trl
Camden, TN 38320
PH. 941-380-1574

SHEET DESCRIPTION:
ANCHOR SCHEDULE AND NOTES

DRAWN BY:	DATE:
MCS	8/27/2026
DWG #: CWS-1267	REV.: A
SCALE: 1:20	SHEET 5 OF 6

TYPICAL HEAD ANCHORAGE

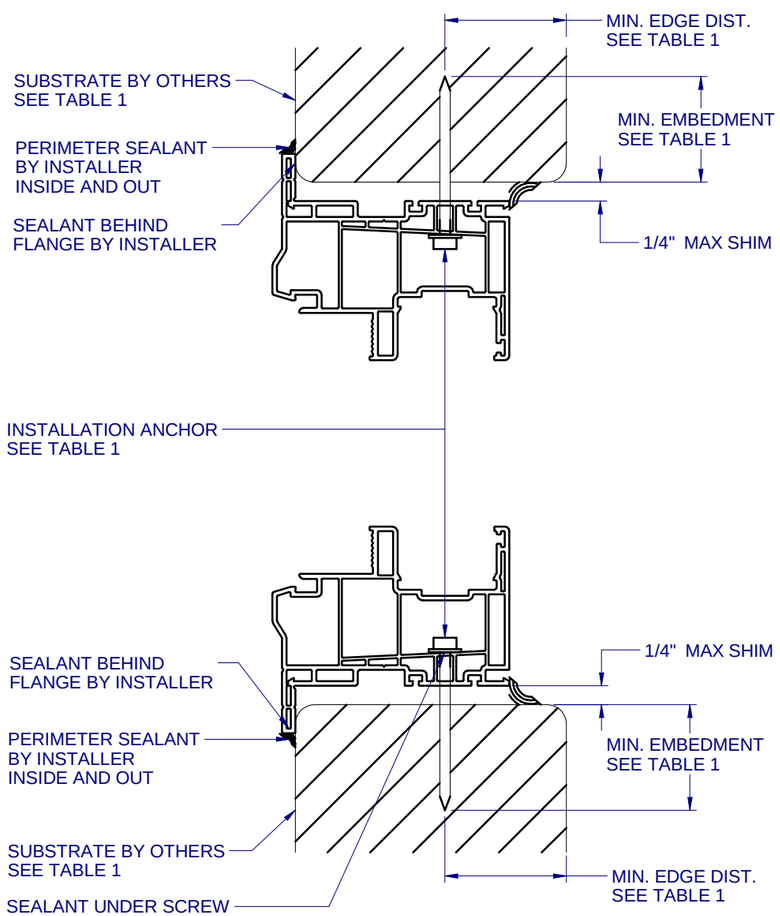

A / 6 VERTICAL SECTION
TYPICAL SILL ANCHORAGE

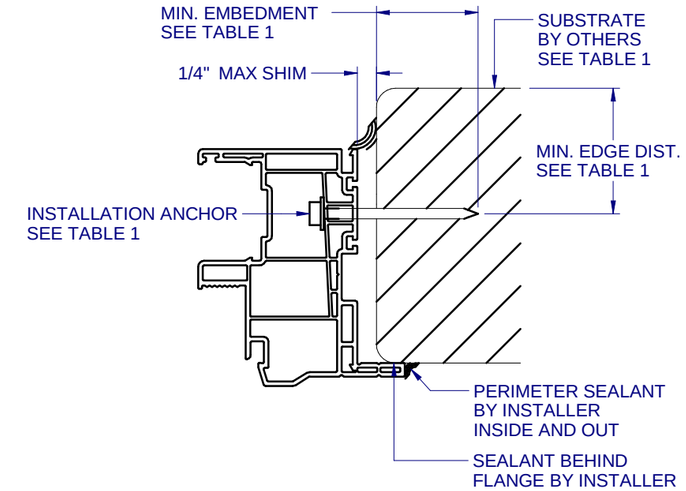

B / 6 HORIZONTAL SECTION
TYPICAL JAMB ANCHORAGE

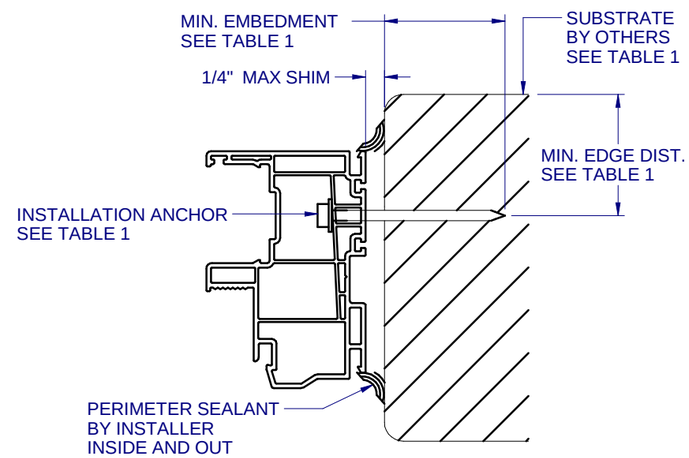

D / 6 HORIZONTAL SECTION
BOX FRAME INSTALLATION
HEAD AND SILL SIMILAR FOR BOX INSTALLATION

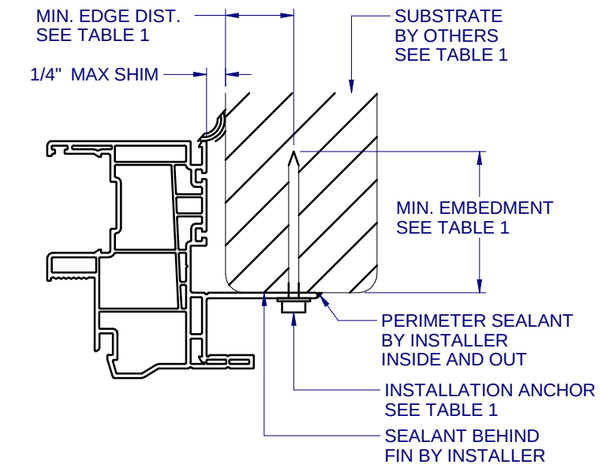

C / 6 HORIZONTAL SECTION
TYPICAL FIN ANCHORAGE
HEAD AND SILL SIMILAR FOR FIN INSTALLATION

NOTE: ADDITIONAL THRU-FRAME ANCHORS (AS SHOWN IN DET. B/6) REQ'D AT THE MULL, SEE SHEET 5 ANCHOR LAYOUT. (HVHZ ONLY)

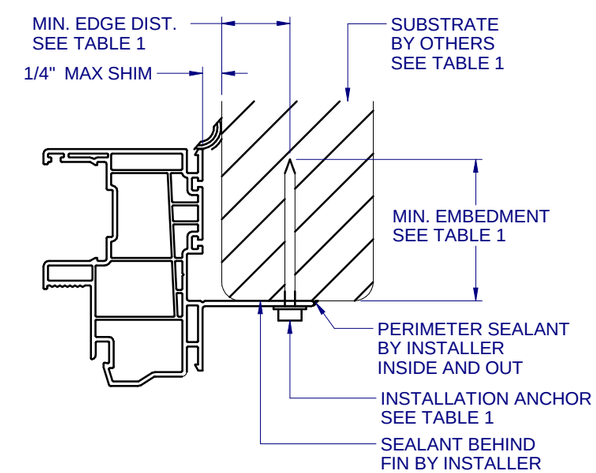

E / 6 HORIZONTAL SECTION
TYPICAL FIN ANCHORAGE
HEAD AND SILL SIMILAR FOR FIN INSTALLATION

FOR INSTALLATIONS WITHIN 3,000 FEET OF A SALTWATER COASTLINE, ANCHORAGE MUST BE REVIEWED FOR COMPLIANCE WITH FBC SECTION 1711 OR SECTION R332 OF THE FLORIDA RESIDENTIAL CODE. REFER TO THE CORRESPONDING EVALUATION REPORT OF THIS APPROVAL FOR ADDITIONAL INFORMATION.

TABLE 1: APPROVED INSTALLATION FASTENERS

FRAME TYPE	SUBSTRATE TYPE	ANCHOR TYPE	MIN. EMBEDMENT	MIN. EDGE DIST.
FLANGE	CONCRETE (2.0 KSI MIN.)	3/16" ITW TAPCON	1"	1-1/8"
FLANGE	HOLLOW OR GROUT-FILLED CMU (117 PCF MIN.)	3/16" ITW TAPCON	1"	2"
FLANGE	CONCRETE (3.05 KSI MIN.)	3/16" DEWALT ULTRACON+	1-3/4"	1"
FLANGE	HOLLOW OR GROUT-FILLED CMU (ASTM C-90)	3/16" DEWALT ULTRACON+	1-1/4"	2-1/2"
FLANGE	2X MIN. SPRUCE-PINE-FIR (G=0.42)	3/16" ITW TAPCON OR DEWALT ULTRACON+	1-3/8"	7/8"
FLANGE	2X MIN. SPRUCE-PINE-FIR (G=0.42)	#10 WOOD SCREW	1-3/8"	7/8"
FLANGE	16 GAUGE (0.060") MIN. STEEL STUD (33 KSI YIELD MIN)	#10-16 HILTI KWIK-FLEX OR ITW TEKS SELF-DRILLING SCREW	FULL THREAD THRU 0.060"	7/16"
FLANGE	1/8" ALUM. (6063-T5 MIN.) OR 1/8" STEEL (33 KSI MIN.)	#10 GRADE 5 SELF-TAPPING / DRILLING SCREW	FULL THREAD THRU 0.125"	7/16"
FIN	2X MIN. SPRUCE-PINE-FIR (G=0.42)	#8 WOOD SCREW	1-1/2"	7/16"

FLANGE REMOVAL NOTE: PARTIALLY OR FULLY REMOVING THE FLANGE, UP TO AND INCLUDING A BOX-FRAME APPLICATION IS ACCEPTABLE PROVIDED:

- MIN. 1/4" FILLET OF CONSTRUCTION-GRADE ADHESIVE CAULK IS APPLIED INSIDE AND OUT, FULL PERIMETER, BY INSTALLER.
- PRODUCT ANCHORAGE IS IN ACCORDANCE WITH REQUIREMENTS AS SHOWN FOR FLANGE WINDOWS.

CWS
1900 SW 44TH AVE.
OCALA, FLORIDA 34474
WWW.CWS.CC

VSH05

8100/8150 PVC SINGLE HUNG/ PICTURE WINDOW IMPACT

PROPRIETARY AND CONFIDENTIAL
THE INFORMATION CONTAINED IN THIS DRAWING IS THE SOLE PROPERTY OF CUSTOM WINDOW SYSTEMS, INC. ANY REPRODUCTION IN PART OR AS A WHOLE WITHOUT THE WRITTEN PERMISSION OF CUSTOM WINDOW SYSTEMS, INC IS PROHIBITED.

FLORIDA APPROVAL NO.:
5823

9/21/2026

LUCAS A. TURNER, P.E.
FL PE # 58201
Turner Engineering & Consulting, Inc.
2428 Old Natchez Trc Trl
Camden, TN 38320
PH. 941-380-1574

SHEET DESCRIPTION:
INSTALLATION DETAILS

DRAWN BY:	DATE:
MCS	8/27/2026
DWG #: CWS-1267	REV.: A
SCALE: 1:2	SHEET 6 OF 6