10'–2" WIDE (MAX) X 18'–0" HIGH (MAX)

CLOPAY/IDEAL/HOLMES

3717/C7X17 – 27GA 1–3/4" THICK RIBBED DOOR
3718/C7X18 – 27GA 1–3/4" THICK FLUSH DOOR
3720/C7X20/240U – 27GA 2" THICK RIBBED DOOR
3722/C0X22 – 20GA 2" THICK FLUSH DOOR

REVISIONS					
REV. NO.	ZONE:	DATE:	ECN NO.	APPVD:	DESCRIPTION
01	–	11/2008	–	–	ADDED MPC; REVISED JAMB ATTACHMENT.
02	–	02/2012	–	–	UPDATED WINDCODE CHART
03	–	11/2020	–	–	REMOVED WINDCODE CHART; UPDATED TITLE BLOCK.

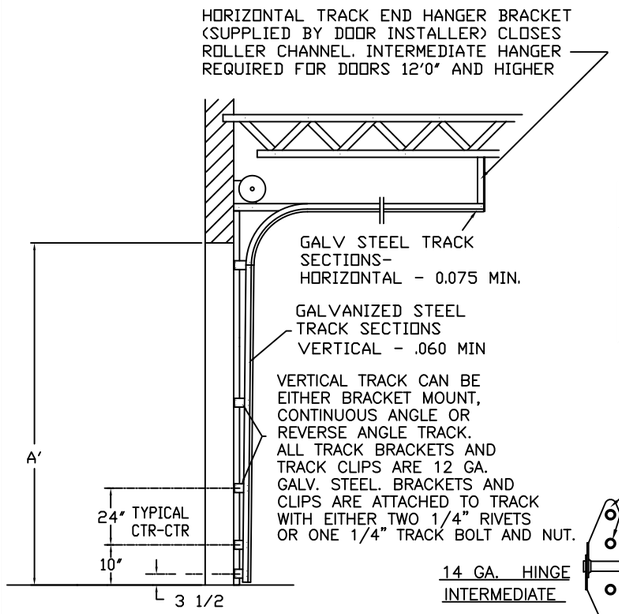

SIDE ELEVATION
STANDARD-LIFT TRACK DETAILS

NOTE: DOUBLE TRACK LOW HEADROOM, HI–LIFT TRACK, FOLLOW–THE–ROOF TRACK, AND VERTICAL LIFT TRACK ARE AVAILABLE OPTIONS.

DOOR HEIGHT 'A'	NUMBER OF SECTIONS
UP TO 8'–0"	4
8'–3" THRU 10'–0"	5
10'–3" THRU 12'–0"	6
12'–3" THRU 14'–0"	7
14'–3" THRU 16'–0"	8
16'–3" THRU 18'–0"	9

HINGE DETAIL

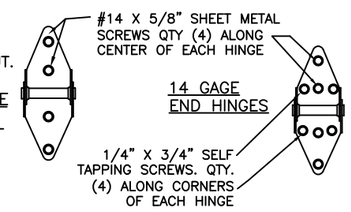

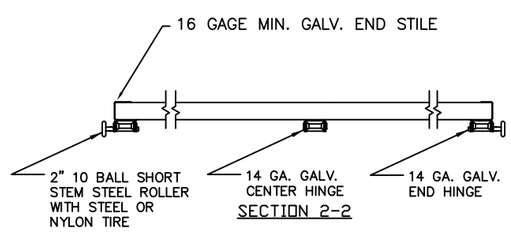

SECTION 2–2

THE OPTIONAL GLAZING SHOWN ON THIS DRAWING MEETS THE WIND LOAD REQUIREMENTS OF THE FLORIDA BUILDING CODE OR INTERNATIONAL BUILDING CODE BUT DOES NOT MEET THE IMPACT RESISTANT REQUIREMENT FOR WINDBORNE DEBRIS REGIONS (REF. CHAPTER 16 FBC/IBC)

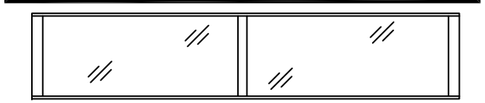

OPTIONAL ALUMINUM FULL VISION WINDOW LITE SECTIONS AVAILABLE (1/8" DSB, 1/8" ACRYLIC, 1/4" WIRE, 1/2" INSUL.). FULL VISION SECTIONS TO HAVE SAME REINFORCEMENT AS OTHER SECTIONS. OPTIONAL ACRYLIC IS PLASKOLITE OPTIX, AN APPROVED CC2 PLASTIC IN COMPLIANCE WITH IBC/FBC 2606.

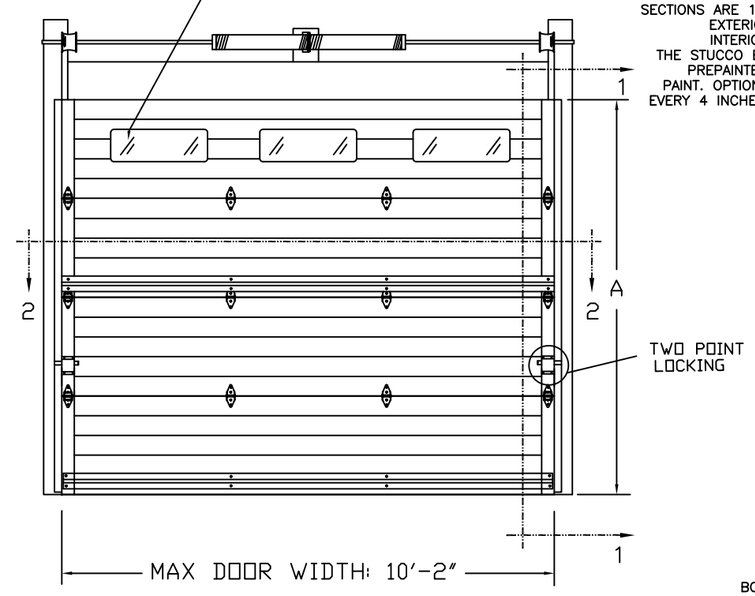

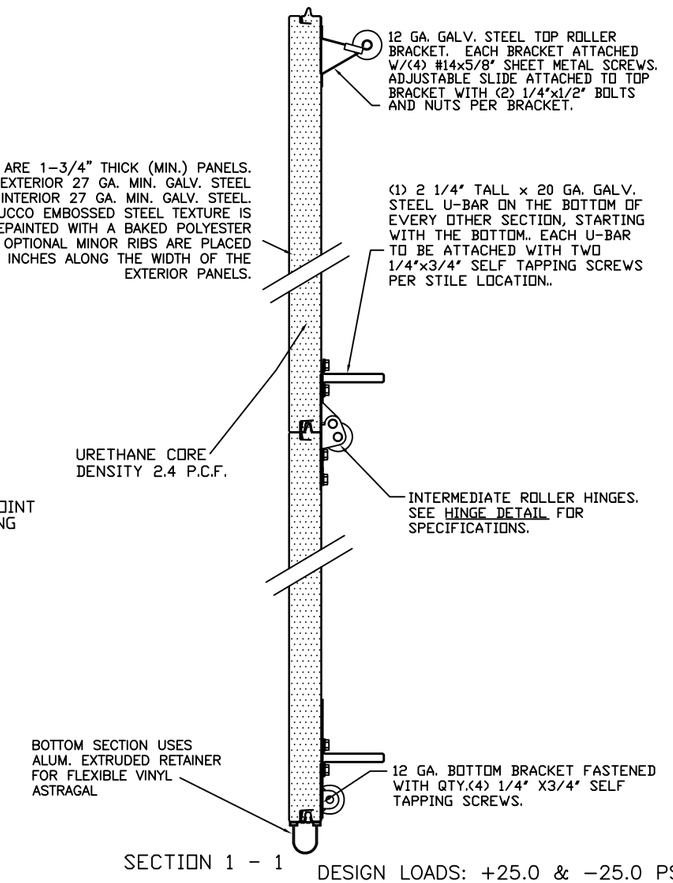

SECTION 1 – 1

DESIGN LOADS: +25.0 & –25.0 PSF
TEST LOADS +37.5 & –37.5 PSF

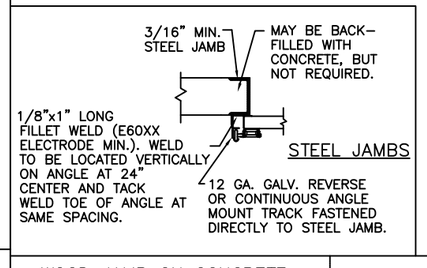

STEEL JAMBS

WOOD JAMB ON CONCRETE

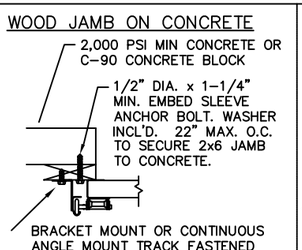

CONCRETE JAMBS

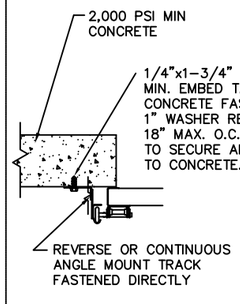

STEEL JAMBS

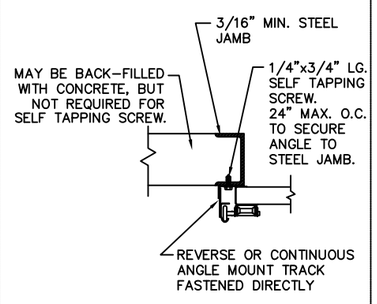

WOOD JAMBS

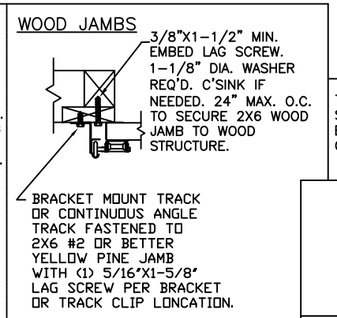

THE DESIGN OF THE SUPPORTING STRUCTURAL ELEMENTS IS THE RESPONSIBILITY OF THE BUILDING ENGINEER OR

DESIGN ENGINEER: MARK WESTERFIELD, P.E.
FLORIDA P.E. #48495, NC P.E. #23832, TEXAS P.E. #91513

CLOPAY CORP.
ALL RIGHTS RESERVED.

Third Angle Projection

Unless Stated Otherwise
TOLERANCES are
.0 = ±.031
.00 = ±.015
.000 = ±.005
.0000 = ±.001
Degrees = ±1/2°
Unless Stated Otherwise DIMENSIONS ARE IN INCHES.

Clopay CORPORATION
8585 Duke Boulevard
Mason, OH 45040 USA
Tel. No. 513–770–4800
Fax No. 513–770–4853

MPC: C–DSIU–1D477

WINDLOAD RATING
W4

DESCRIPTION: MODEL 37XX URETHANE INSULATED DOOR

DRAWN BY: BFA	DATE: 11/26/07	SCALE: N/A	DWG. SIZE B
CHECKED BY: S.HAMILTON	DATE: 11/26/07	SHEET 1 OF 1	
DWG. NO.: 104040		VER: IBC	

FLORIDA PRODUCT APPROVAL 5678.08