CLOPAY MODEL 3200 (24 GA MIN EXT SKIN) HOLMES MODEL 240, 240G (24 GA MIN EXT
CLOPAY MODEL 3220 (20 GA MIN EXT SKIN) SKIN)

REV	DATE	DESCRIPTION
6	11/2005	ADDED ROLLER OPTION
7	11/2008	REVISED JAMB ATTACHMENTS.
8	02/2012	UPDATED WINDCODE CHART
9	11/30/20	UPDATED TITLE BLOCK AND REMOVED WINDCODE CHART.

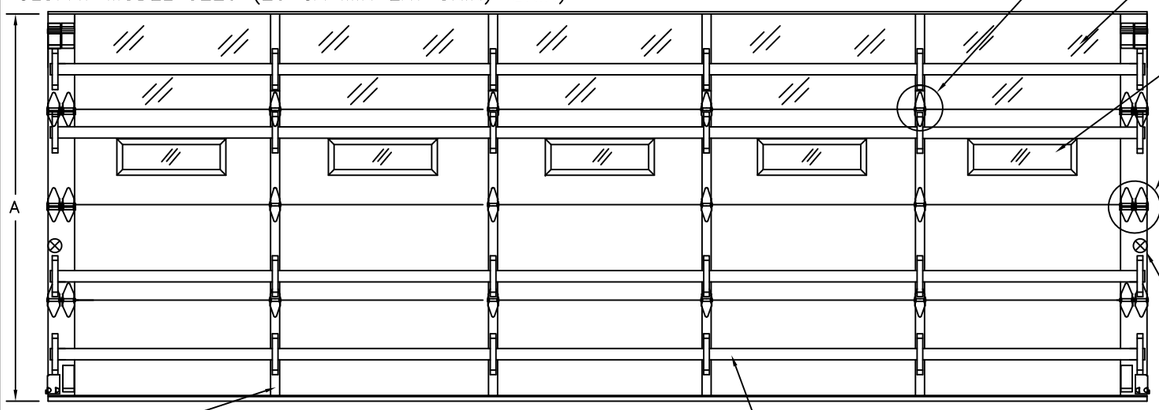

OPTIONAL ALUMINUM FULL VISION WINDOW LITE SECTIONS AVAILABLE (1/8" DSB, 1/8" ACRYLIC, 1/4" WIRE, 1/2" INSUL.). FULL VISION SECTIONS TO HAVE SAME REINFORCEMENT AS OTHER SECTIONS.

OPTIONAL 24" x 8" DSB GLASS, INSULATED GLASS OR ACRYLIC WINDOW LITES.

OPTIONAL ACRYLIC IS PLASKOLITE OPTIX, AN APPROVED CC2 PLASTIC IN COMPLIANCE WITH IBC/FBC 2606.

(1) 20 GA.x2" GALV. STEEL BACKER PLATE AT EACH INTERMEDIATE HINGE LOCATION. BACKER PLATE ATTACHED WITH DOUBLE SIDED ACRYLIC ADHESIVE TO BACK OF DOOR.

MAX. DOOR WIDTH 20'-2"

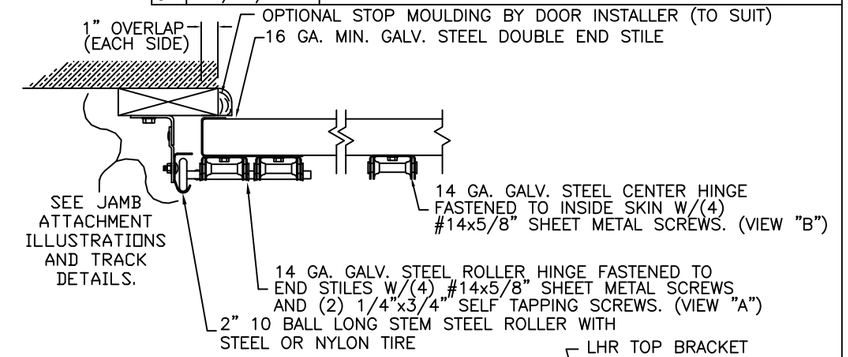

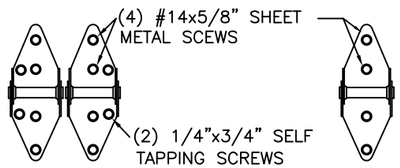

14 GA. END HINGE
VIEW "A"

14 GA. INTERMEDIATE HINGE
VIEW "B"

DOOR HEIGHT 'A'	NUMBER OF SECTIONS
UP TO 8'-0"	4
8'-3" THRU 10'-0"	5
10'-3" THRU 12'-0"	6
12'-3" THRU 14'-0"	7
14'-3" THRU 16'-0"	8
16'-3" THRU 18'-0"	9

DOOR WIDTH	# OF BACKER PLATES	# OF STRAPS
16'-4" THRU 20'-2"	4	6

NOTE: THE DESIGN OF THE SUPPORTING STRUCTURAL ELEMENTS ARE THE RESPONSIBILITY OF THE PROFESSIONAL OF RECORD FOR THE BUILDING OR STRUCTURE AND IN ACCORDANCE WITH CURRENT BUILDING CODES FOR THE LOADS LISTED ON THIS DRAWING.

NOTE: DOUBLE TRACK LOW HEADROOM, HI-LIFT TRACK, FOLLOW-THE-ROOF TRACK, AND VERTICAL LIFT TRACK ARE AVAILABLE OPTIONS. 3" TRACK ALSO AVAILABLE.

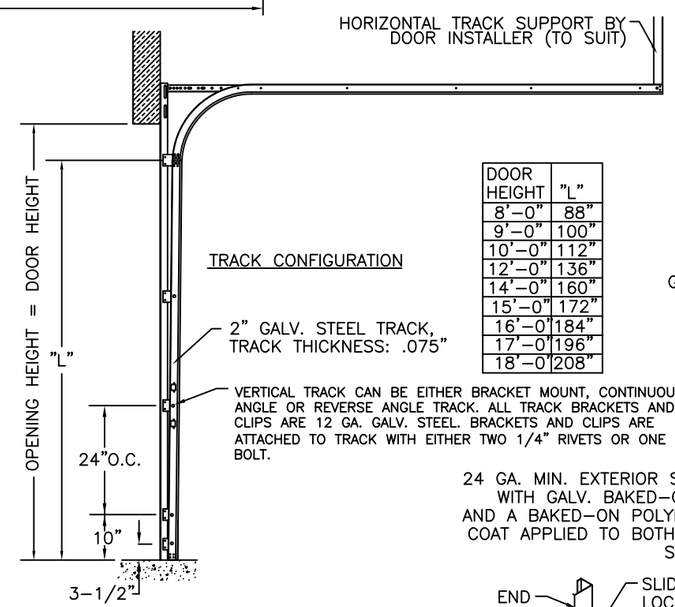

TRACK CONFIGURATION

2" GALV. STEEL TRACK, TRACK THICKNESS: .075"

VERTICAL TRACK CAN BE EITHER BRACKET MOUNT, CONTINUOUS ANGLE OR REVERSE ANGLE TRACK. ALL TRACK BRACKETS AND TRACK CLIPS ARE 12 GA. GALV. STEEL. BRACKETS AND CLIPS ARE ATTACHED TO TRACK WITH EITHER TWO 1/4" RIVETS OR ONE 1/4" BOLT.

DOOR HEIGHT	"L"
8'-0"	88"
9'-0"	100"
10'-0"	112"
12'-0"	136"
14'-0"	160"
15'-0"	172"
16'-0"	184"
17'-0"	196"
18'-0"	208"

JAMB CONFIGURATION

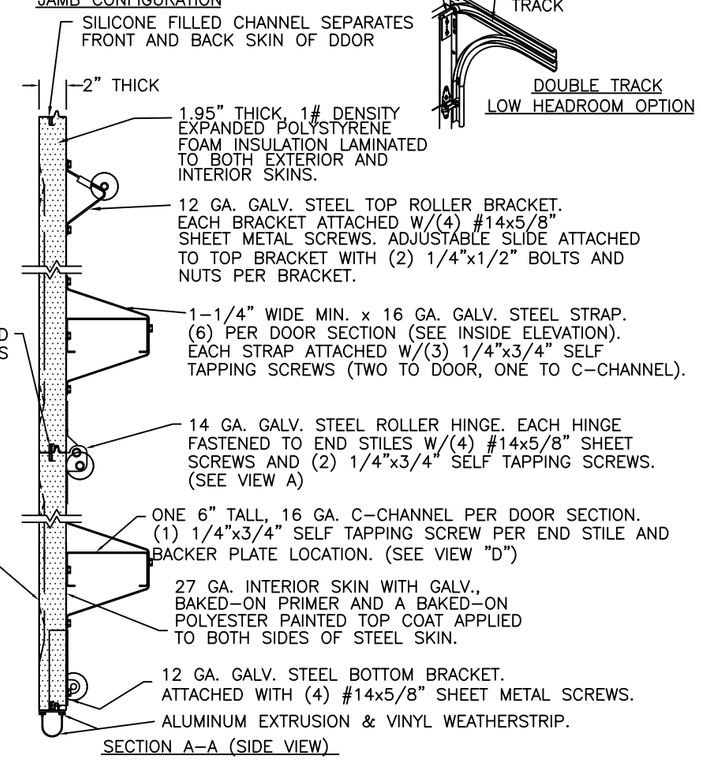

SECTION A-A (SIDE VIEW)

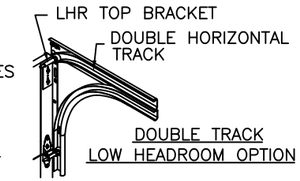

DOUBLE TRACK
LOW HEADROOM OPTION

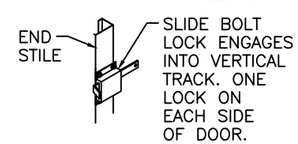

INSIDE SLIDE BOLT
LOCK OPTION

THE OPTIONAL GLAZING SHOWN ON THIS DRAWING MEETS THE WIND LOAD REQUIREMENTS OF THE FLORIDA BUILDING CODE OR INTERNATIONAL BUILDING CODE BUT DOES NOT MEET THE IMPACT RESISTANT REQUIREMENT FOR WINDBORNE DEBRIS REGIONS (REF. CHAPTER16 FBC/IBC)

DESIGN ENGINEER: MARK WESTERFIELD, P.E.
FLORIDA P.E. #48495
DESIGN LOADS: +25.0, -28.0 PSF
TEST LOADS: +37.5, -42.0 PSF

JAMB ATTACHMENT ILLUSTRATIONS

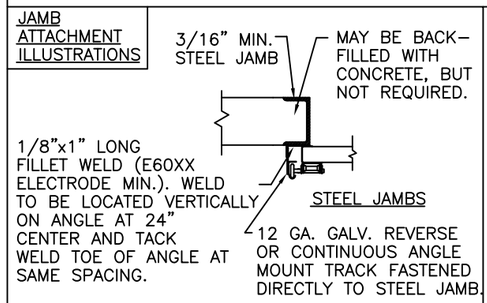

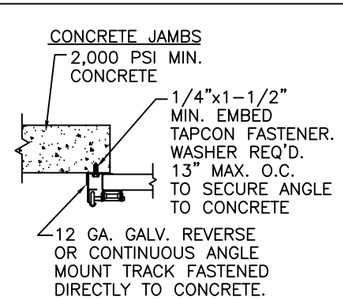

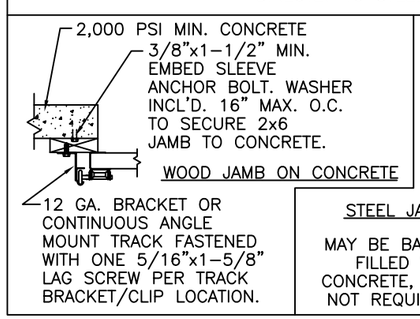

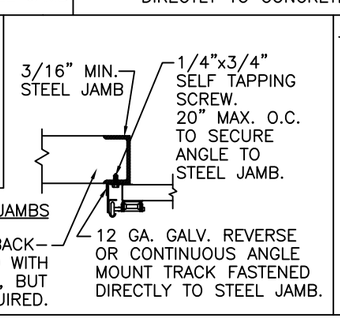

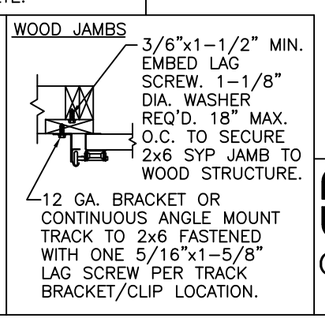

Clopay CORPORATION

CLOPAY CORPORATION
8585 DUKE BLVD.
MASON, OH 45040
(513) 770-4800

Clopay Corporation All Rights Reserved.

MANUFACTURING PRODUCT CODE: MPC: C-DSIE-1F447	CLOPAY WINDLOAD RATING: W4
	MAX. SIZE: 20'-2" X 18'-0"
DATE: 9/12/96	DESCRIPTION: COMM 2" EPS: +25/-28 PSF
DRAWN BY: MWW	
CHECKED BY:	B
	DRAWING NUMBER: 101682

FLORIDA PRODUCT APPROVAL 5678.06